City Of Idaho Falls
Building Department

Accessible Toilet Requirements:

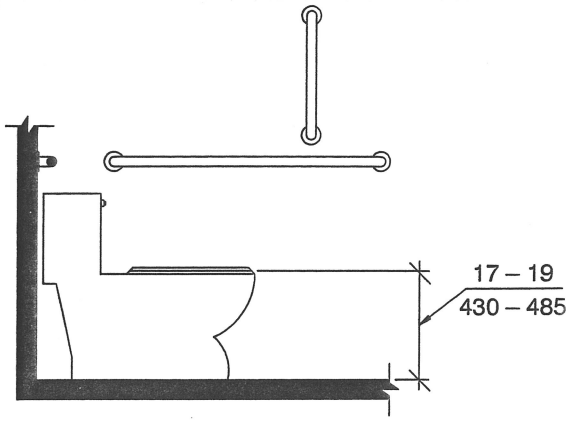

Fig. 604.4
Water Closet Height

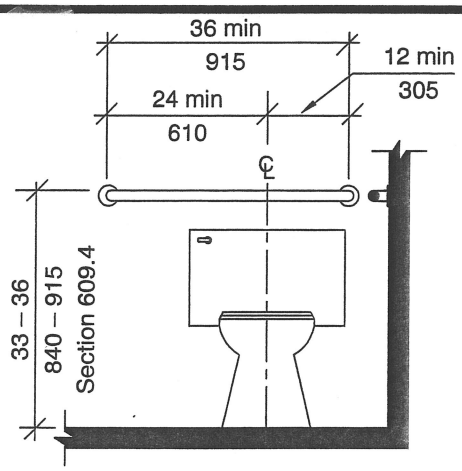

Fig. 604.5.2
Rear Wall Grab Bar for Water Closet

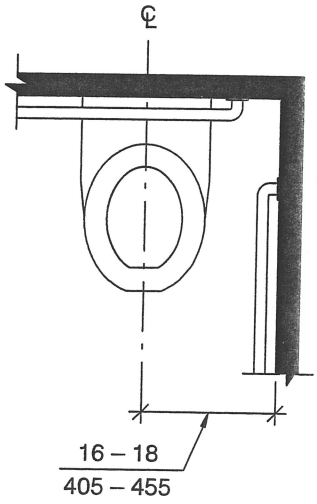

(a) Accessible Water Closets

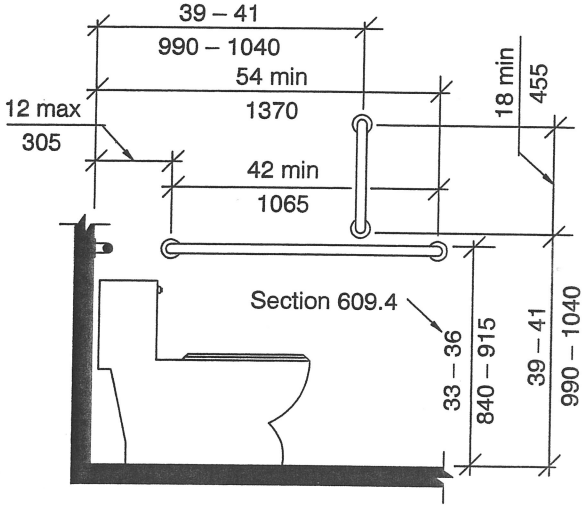

Fig. 604.5.1
Side Wall Grab Bar for Water Closet

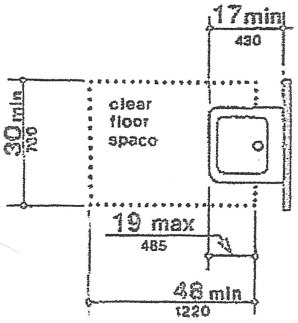

Fig. 32
Clear Floor Space at Lavatories

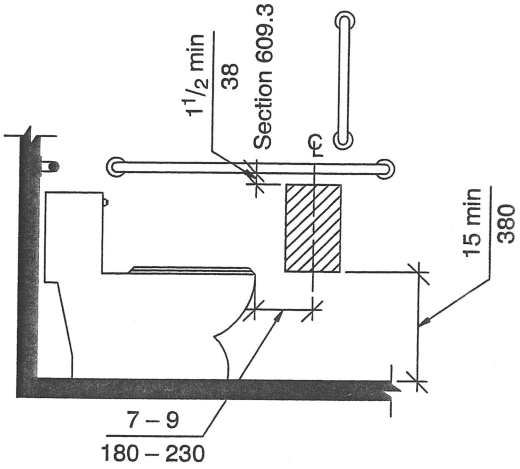

(a) Below Grab Bar

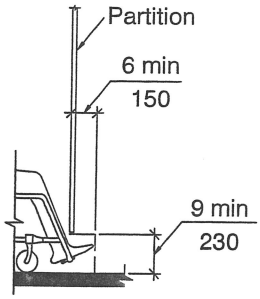

(a)
Elevation
Adult

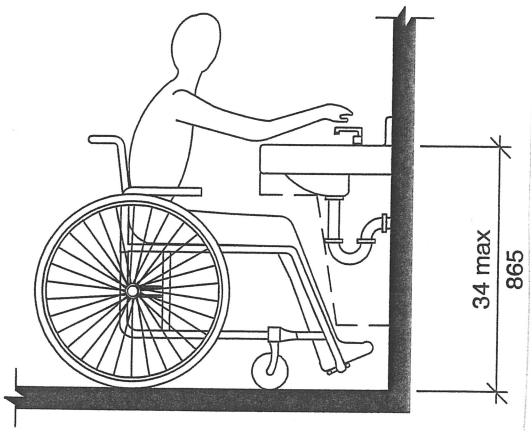

Fig. 606.3
Height of Lavatories and Sinks