CITY COUNCIL MEETING
Thursday, February 13, 2020
7:30 p.m.

CITY COUNCIL CHAMBERS
680 Park Avenue
Idaho Falls, ID 83402

Thank you for your interest in City Government. If you wish to express your thoughts on a matter listed below, please contact Councilmembers by email or personally ***before*** *the meeting. Public testimony on agenda items will not be taken unless a hearing is indicated. Be aware that an amendment to this agenda may be made upon passage of a motion that states the reason for the amendment and the good faith reason that the agenda item was not included in the original agenda posting. Regularly-scheduled City Council Meetings are live streamed at www.idahofallsidaho.gov, then archived on the city website. If you need communication aids or services or other physical accommodations to participate or access this meeting, please contact City Clerk Kathy Hampton at 612-8414 or the ADA Coordinator Lisa Farris at 612-8323 as soon as possible and they will accommodate your needs.*

1. **Call to Order.**

2. **Pledge of Allegiance.**

3. **Public Comment.** *Members of the public are invited to address the City Council regarding matters that are* ***not*** *on this agenda or already noticed for a public hearing. When you address the Council, please state your name and city for the record and please limit your remarks to three (3) minutes. Please note that matters currently pending before the Planning Commission or Board of Adjustment, which may be the subject of a pending enforcement action or which are relative to a City personnel matter, are not suitable for public comment.*

4. **Consent Agenda.** *Any item may be removed from the Consent Agenda at the request of any member of the Council for separate consideration.*

A. Items from Idaho Falls Power:

1) Power Trade Confirmation Agreements
2) Idaho Falls Power Service Policy Update
3) Minutes from the January 30, 2020 Idaho Falls Power Board Meeting

B. Items from Municipal Services:

1) IF-20-K, Purchase Jet Truck for Public Works
2) RFQ 20-071, Elevator Upgrade at the Gem State Hydroelectric Plant
3) Treasurer's Report for December 2019
4) Minutes from the January 27, 2020 Council Work Session; and, January 30, 2020 Council Meeting
5) License Applications, all carrying the required approvals

RECOMMENDED ACTION: Approve, accept, or receive all items on the Consent Agenda according to the recommendations presented (or take other action deemed appropriate).

5. **Regular Agenda.**

A. Fire Department

1) Approval for Modification of City Ordinance, Title 7 Chapter 10 and Title 4 Chapter 17: The risk to the public and emergency personnel of the City of Idaho Falls can be considerably lessened when emergency response personnel have current and accurate information about the conditions, conduct, and operations of a business during an emergency response. This ordinance will allow the Fire

Department Prevention Division to better identify, inspect and verify that the accurate use, permits, and maintenance is being performed within these properties.

RECOMMENDED ACTION: Approve the modification of the City Ordinance Title 7, Chapter 10 and addition of Title 4, Chapter 17 under a suspension of the rules requiring three complete and separate readings and request that it be read by title and published by summary (or consider the Ordinance on the first reading and that it be read by title, or reject the Ordinance).

B. Municipal Services

1) Haul and Spread of Liquid Wastewater Bio-Solids for Public Works: Bid IF-20-09 was published and did not receive any bidders. To maintain compliance with Idaho Department of Environmental Quality (IDEQ) discharge permit requirements, Public Works must have the ability to haul and spread liquid wastewater bio-solids. The estimated amount to haul as stated in the bid invitation was 145,000 gallons. With no bids received, Public Works is requesting the authorization to enter into the open market.

RECOMMENDED ACTION: Authorization to enter into the open market (or take other action deemed appropriate) to contract for haul and spread of liquid wastewater bio-solids services for Public Works.

C. Public Works

1) Approval for Modification of City Sewer Ordinance, Title 8, Chapter 1: For consideration are proposed modifications to City Sewer Ordinance, Title 8, Chapter 1. The Idaho Department of Environmental Quality (IDEQ) has recently taken over the duties of primacy of wastewater discharges in Idaho from the US Environmental Protection Agency (EPA). This past year was the first that IDEQ staff completed Pretreatment Program inspections and as part of those inspections, IDEQ requested several changes to our Sewer ordinance. Public Works staff have worked with IDEQ and our Legal Department to accommodate those changes and to update the ordinance.

RECOMMENDED ACTION: Approve modifications of the City Sewer Ordinance, Title 8, Chapter 1 to incorporate suggestions made by the Idaho Department of Environmental Quality, under a suspension of the rules requiring three complete and separate readings and request that it be read by title and published by summary (or consider the Ordinance on the first reading and that it be read by title, or reject the Ordinance).

2) Approval of the State/Local Agreement with Idaho Transportation Department for the W 17th Street and Rollandet Avenue Intersection Improvements: For consideration is a State/Local Agreement and Resolution with the Idaho Transportation Department (ITD) for the development of the W 17th Street and Rollandet Avenue Intersection Improvements project. A safety audit of 17th Street in 2016 indicated a need to install a median curb and island in the intersection and create a left hand turn restriction. As a consequence of this traffic alteration, W 19th Street at the railroad crossing will receive increased traffic volume and this project will also improve the condition of this intersection near the railroad tracks.

RECOMMENDED ACTION: Approve the State/Local Agreement, and the accompanying resolution, with Idaho Transportation Department for the W 17th Street and Rollandet Avenue Intersection

Improvements, and give authorization for the Mayor and City Clerk to execute the necessary documents (or take other action deemed appropriate).

3) Approval of State/Local Agreement with Idaho Transportation Department for the Path Connection Plan on Short Street: For consideration is a State/Local Agreement and Resolution with the Idaho Transportation Department (ITD) for development of the Path Connection Plan. This project will provide a sidewalk along S Yellowstone Avenue between N 15th Street and Cliff Street and also along the east side of Capital Avenue from Pancheri Drive to Short Street.

RECOMMENDED ACTION: Approve the State/Local Agreement, and the accompanying resolution, with Idaho Transportation Department for the Path Connection Plan on Short Street, and give authorization for the Mayor and City Clerk to execute the necessary documents (or take other action deemed appropriate).

4) Approval of the State/Local Agreement with Idaho Transportation Department for the ADA Sidewalk and Thermoplastic Upgrades project: For consideration is a State/Local Agreement and Resolution with the Idaho Transportation Department (ITD) for the construction of ADA sidewalk and thermoplastic improvements on various streets. The agreement combines two separate projects into one that should help lower bid costs as the two projects will bid as a combined package. ADA corner upgrades will be completed on 5th Street, 9th Street, 10th Street and 12th Street between South Boulevard and Holmes Avenue. ADA corner upgrades will also be completed along 25th Street, John Adams Parkway and Garfield Street and thermoplastic crosswalks will be placed on minor street approaches to these streets.

RECOMMENDED ACTION: Approve the State/Local Agreement, and the accompanying resolution, with Idaho Transportation Department for the ADA Sidewalk and Thermoplastic Upgrades project and give authorization for the Mayor and City Clerk to execute the necessary documents (or take other action deemed appropriate).

D. Office of the Mayor

1) E-Scooter/E-Bike Ordinance: For consideration is an ordinance that provides comprehensive regulation of E-bikes and E-scooters within the City of Idaho Falls. This ordinance was drafted by several City departments including Police, Public Works, Community Development Services, Parks & Recreation, Legal Services, and the Mayor's Office of Economic Development.

RECOMMENDED ACTION: Approve the Ordinance amending Title 9 by the addition of Chapter 8, under a suspension of the rules requiring three complete and separate readings and request that it be read by title and published by summary (or consider the Ordinance on the first reading and that it be read by title, or reject the Ordinance).

E. Community Development Services

1) Final Plat and Reasoned Statement of Relevant Criteria and Standards, Jackson Hole Junction Subdivision, 1st Amended: For consideration is the application for a Final Plat for Jackson Hole Junction Subdivision 1st Amended. The Planning and Zoning Commission considered this item at its February 4, 2020, meeting and recommended approval of the plat by unanimous vote. Staff concurs with this recommendation.

RECOMMENDED ACTIONS (in sequential order):

a. Accept the Final Plat for Jackson Hole Junction Subdivision, 1st Amended, and give authorization for the Mayor, City Engineer, and City Clerk to sign said Final Plat.

b. Approve the Reasoned Statement of Relevant Criteria and Standards for the Final Plat for Jackson Hole Junction Subdivision, 1st Amended, and give authorization for the Mayor to execute the necessary documents.

2) Public Hearing – Ordinance Amending the Form-Based Code to allow Parklets: Because this is an amendment to a Zoning Code, public hearing notification is required. Although the hearing was duly noticed and, therefore, must be placed on the agenda, the full ordinance packet was not fully prepared in time for the meeting and therefore must be tabled. The Planning and Zoning Commission reviewed this item at its December 3, 2019, meeting and recommended approval by unanimous vote.

RECOMMENDED ACTION: Table consideration of the proposed Ordinance to the February 27th, 2020 meeting (or take other action deemed appropriate).

3) Public Hearing – Planned Unit Development Amendment and Reasoned Statement of Relevant Criteria and Standards Linden Trails Townhomes: For consideration is the application for a Planned Unit Development (PUD) Amendment for Linden Trails Townhomes. The Planning and Zoning Commission considered this item at its January 7, 2020 meeting and recommended denial of the PUD by a 5-3 vote. Specifically, the motion at the meeting stated to recommend denial, "on the basis that (the developers) have an approved amendment that was submitted in July 2019 and there needs to be more discussion between the developer and the Community Development Department of the appropriateness and the best way to continue with this PUD, and there is no indication that they are suffering either financially, or suffering any adverse consequences to the developer to continue development of the PUD with the twin home concept." This motion was not based on any criteria relevant to approval or denial of the request and staff does not concur with the recommendation and recommends approval of the request.

RECOMMENDED ACTIONS (in sequential order):

a. Approve the Planned Unit Development for Linden Trails Townhomes as presented.

b. Approve the Reasoned Statement of Relevant Criteria and Standards for the Planned Unit Development for Linden Trails Townhomes as presented, and give authorization for the Mayor to execute the necessary documents.

4) Public Hearing – Ordinance and Reasoned Statement of Relevant Criteria and Standards Rezoning Property from RP to R3, 2550 Richards Avenue: For consideration is the application to rezone property located at 2550 Richards Avenue from RP to R3. This item was considered by the Planning and Zoning Commission at its December 3, 2019 meeting. The Commission recommended approval of rezoning the property to R2, rather than R3, by unanimous vote. Staff believes the R3 is still a more appropriate zone in terms of matching the existing zoning scheme in the area, although R2 is also supported by the principles of the Comprehensive Plan.

RECOMMENDED ACTIONS (in sequential order):

a. Approve the Ordinance Rezoning M&B: 1.1228 Acres NW1/4 of the NW1/4 of the SW1/4, Section 28, T 2N, R 38E, from RP to R3 under suspension of the rules that require three complete and separate readings and that it be read by title and published by summary (or consider the Ordinance on the first reading and that it be read by title, or reject the Ordinance).

b. Approve the Reasoned Statement of Relevant Criteria and Standards for the Rezoning of M&B: 1.1228 Acres NW1/4 of the NW1/4 of the SW1/4, Section 28, T 2N, R 38E, from RP to R3, and give authorization for the Mayor to execute the necessary documents.

5) Public Hearing – Subdivision Ordinance Amendments: For consideration are changes to the Subdivision Code which clarify various procedures and requirements. Many of these needed changes were brought to light following a recently appealed plat. During that process, a number of confusing and missing elements were discovered. These proposed changes address those issues. The changes also include a thorough description of various meeting types and procedures. This is a requirement of the Local Land Use Planning Act but has been missing from our codes. The Planning and Zoning Commission considered these changes at its December 3, 2019, and recommended approval by unanimous vote.

RECOMMENDED ACTION: Approve the Ordinance amending City Code Title 10, under a suspension of the rules requiring three complete and separate readings and request that it be read by title and published by summary (or consider the Ordinance on the first reading and that it be read by title, or reject the Ordinance).

6) Public Hearing – Zoning Ordinance Amendments: For consideration are changes to three sections of the Zoning Ordinance. First is to correct some numbering issues that were inadvertently created with a previous adjustment to the code. The second change is to adjust standards for accessory dwellings and blank walls on commercial buildings. The changes to blank wall requirements are a result of monitoring issues with the current requirements over the past 12-18 months. The final change is to adjust standards for screening and open storage. The current language has created confusion and need to be clarified. The Planning and Zoning Commission considered these changes at its November 5, 2019, and January 7, 2020, meetings and recommended approval by unanimous vote. Staff concurs with this recommendation and respectfully requests approval of the changes.

RECOMMENDED ACTION: Approve the Ordinance amending City Code Title 11, Chapters 2, 3, and 4 under a suspension of the rules requiring three complete and separate readings and request that it be read by title and published by summary (or consider the Ordinance on the first reading and that it be read by title, or reject the Ordinance).

6. **Announcements.**

7. **Adjournment.**

IDAHO FALLS

MEMORANDUM

FROM: Bear Prairie, General Manager
DATE: Monday, January 27, 2020
RE: Power Trade Confirmation Agreements

Council Action Desired

☐ Ordinance ☐ Resolution ☐ Public Hearing

☒ Other Action (Approval, Authorization, Ratification, etc)

Consent Agenda for Ratification

Description, Background Information & Purpose

Idaho Falls Power requests that these Power Trade Confirmation Agreements with Shell Energy North America (US), LP to sell 109,905 megawatt hours of planned surplus for the months of January 2020 through September 2020 for a total of $1,445,454 dollars be ratified.

Relevant PBB Results & Department Strategic Plan

☐ ☒ ☒ ☐ ☐ ☐ ☒ ☐

This action supports the good governance, strong, stable, and healthy economic growth and vibrant community-oriented results. It also supports the financial stability and risk management element of the IFP Strategic Plan.

Interdepartmental Coordination

n/a

Fiscal Impact

These are energy sales, so there is no cost to the IFP budget. The negotiated sales price is in line with the projected budget amount, thereby having negligible impact on the budget balance sheet.

Legal Review

n/a

Shell Energy North America (US), L.P.
1000 MAIN ST LEVEL 12
HOUSTON, TX 77002
877-504-2491

January 24, 2020 Deal No. 3641556

CITY OF IDAHO FALLS
140 S CAPITOL AVENUE,
IDAHO FALLS, ID 83405
Fax: 1(208)612-8435

CONFIRMATION AGREEMENT

This confirmation agreement (this "Confirmation" or "Agreement") shall confirm the agreement reached on January 22, 2020, between Shell Energy North America (US), L.P. ("Shell Energy") and CITY OF IDAHO FALLS ("CounterParty") (herein sometimes referred to as a "Party" and collectively as the "Parties") regarding the sale of electric capacity and/or electric energy under the terms and conditions set forth below.

BUYER:	Shell Energy North America (US), L.P.
SELLER:	CITY OF IDAHO FALLS
PRODUCT/FIRMNESS:	WSPP Sch. C
PERIOD OF DELIVERY	02/01/2020 through 02/29/2020
QUANTITY:	15 Mws of energy per hour
PRICE:	$ 19/Mwhr Fixed
DELIVERY POINT(S):	MONA
SCHEDULING:	Monday thru Saturday, Hours ending 0700 thru 2200 Excluding NERC Holidays
TIME ZONE:	PPT
TOTAL MWH:	6,000
SPECIAL CONDITIONS:	Seller and Buyer agree to notify each other as soon as practically possible of any interuption or curtailment affecting this transaction. Seller should notify Coral at 1-(800) 267-2562.

SUBJECT TO MASTER AGREEMENT DATED: WSPP as amended 02/01/2000

No Challenges; Defense of Agreement. Neither Party will exercise any of its respective rights under Section 205 or Section 206 of the Federal Power Acts to challenge or seek to modify any of the rates or other terms and conditions of this Agreement.

Mobile-Sierra.

(a) Absent the agreement of all parties to the proposed change, the standard of review for changes to any portion of this Agreement or any Transaction entered into hereunder proposed by a Party, a non-party, or the Federal Energy Regulatory Commission acting sua sponte, shall be the "public interest" standard of review set forth in United Gas Pipe Line Co. v. Mobile Gas Service Corp., 350 U.S. 332 (1956) and Federal Power Commission v. Sierra Pacific Power Co., 350 U.S. 348 (1956) (the "Mobile-Sierra" doctrine).

(b) The Parties agree that, if and to the extent that FERC adopts a final Mobile-Sierra policy statement in Docket No. PL02-7-000 ("Final Policy Statement"), which requires that, in order to exclude application of the "just and reasonable" standard under Sections 205 and 206 of the Federal Power Act, the Parties must agree to language which varies from that set forth in clause (a) immediately above, then, without further action of either Party, such Section shall be deemed amended to incorporate the specific language in the Final Policy Statement that requires the "public interest" standard of review.

Shell Energy North America (US), L.P.

Deal No. 3641556

This Confirmation sets forth the terms of the transaction into which the Parties have entered into and shall constitute the entire agreement between the Parties relating to the contemplated purchase and sale of electric energy and/or electric capacity please have this confirmation executed by an authorized representative or officer of your company and return via facsimile to (713) 767 5414. If no facsimile objection to this Confirmation has been received by Shell Energy by facsimile transmission by 5:00 p.m., Houston, Texas time, five (5) business days after delivery of this Confirmation to the other Party by facsimile, then this Confirmation (i) shall be binding and enforceable against Counterparty and Shell Energy and (ii) shall be the final expression of all the terms hereof, regardless whether executed by the other Party.

CITY OF IDAHO FALLS

By: Bear Prasini

Name:

Title: GM

Date: 1/28/20

Shell Energy North America (US), L.P.

By: John W. Pillion

Name: John W. Pillion

Title: Confirmations Team Lead

Date: 01/24/2020

Shell Energy North America (US), L.P.
1000 MAIN ST LEVEL 12
HOUSTON, TX 77002
877-504-2491

January 24, 2020 Deal No. 3641557

CITY OF IDAHO FALLS
140 S CAPITOL AVENUE,
IDAHO FALLS, ID 83405
Fax: 1(208)612-8435

CONFIRMATION AGREEMENT

This confirmation agreement (this "Confirmation" or "Agreement") shall confirm the agreement reached on January 22, 2020, between Shell Energy North America (US), L.P. ("Shell Energy") and CITY OF IDAHO FALLS ("CounterParty") (herein sometimes referred to as a "Party" and collectively as the "Parties") regarding the sale of electric capacity and/or electric energy under the terms and conditions set forth below.

BUYER:	Shell Energy North America (US), L.P.
SELLER:	CITY OF IDAHO FALLS
PRODUCT/FIRMNESS:	WSPP Sch. C
PERIOD OF DELIVERY	03/01/2020 through 03/31/2020
QUANTITY:	15 Mws of energy per hour
PRICE:	$ 18/Mwhr Fixed
DELIVERY POINT(S):	MONA
SCHEDULING:	Monday thru Saturday, Hours ending 0700 thru 2200 Excluding NERC Holidays
TIME ZONE:	PPT
TOTAL MWH:	6,240
SPECIAL CONDITIONS:	Seller and Buyer agree to notify each other as soon as practically possible of any interuption or curtailment affecting this transaction. Seller should notify Coral at 1-(800) 267-2562.

SUBJECT TO MASTER AGREEMENT DATED: WSPP as amended 02/01/2000

No Challenges; Defense of Agreement. Neither Party will exercise any of its respective rights under Section 205 or Section 206 of the Federal Power Acts to challenge or seek to modify any of the rates or other terms and conditions of this Agreement.

Mobile-Sierra.

(a) Absent the agreement of all parties to the proposed change, the standard of review for changes to any portion of this Agreement or any Transaction entered into hereunder proposed by a Party, a non-party, or the Federal Energy Regulatory Commission acting sua sponte, shall be the "public interest" standard of review set forth in United Gas Pipe Line Co. v. Mobile Gas Service Corp., 350 U.S. 332 (1956) and Federal Power Commission v. Sierra Pacific Power Co., 350 U.S. 348 (1956) (the "Mobile-Sierra" doctrine).

(b) The Parties agree that, if and to the extent that FERC adopts a final Mobile-Sierra policy statement in Docket No. PL02-7-000 ("Final Policy Statement"), which requires that, in order to exclude application of the "just and reasonable" standard under Sections 205 and 206 of the Federal Power Act, the Parties must agree to language which varies from that set forth in clause (a) immediately above, then, without further action of either Party, such Section shall be deemed amended to incorporate the specific language in the Final Policy Statement that requires the "public interest" standard of review.

Shell Energy North America (US), L.P.

Deal No. 3641557

This Confirmation sets forth the terms of the transaction into which the Parties have entered into and shall constitute the entire agreement between the Parties relating to the contemplated purchase and sale of electric energy and/or electric capacity please have this confirmation executed by an authorized representative or officer of your company and return via facsimile to (713) 767 5414. If no facsimile objection to this Confirmation has been received by Shell Energy by facsimile transmission by 5:00 p.m., Houston, Texas time, five (5) business days after delivery of this Confirmation to the other Party by facsimile, then this Confirmation (i) shall be binding and enforceable against Counterparty and Shell Energy and (ii) shall be the final expression of all the terms hereof, regardless whether executed by the other Party.

CITY OF IDAHO FALLS

By: Ryan Lossigui

Name:

Title: GM

Date: 1/28/20

Shell Energy North America (US), L.P.

By: John W. Pillion

Name: John W. Pillion

Title: Confirmations Team Lead

Date: 01/24/2020

Shell Energy North America (US), L.P.
1000 MAIN ST LEVEL 12
HOUSTON, TX 77002
877-504-2491

January 23, 2020 Deal No. 3641558

CITY OF IDAHO FALLS
140 S CAPITOL AVENUE,
IDAHO FALLS, ID 83405
Fax: 1(208)612-8435

CONFIRMATION AGREEMENT

This confirmation agreement (this "Confirmation" or "Agreement") shall confirm the agreement reached on January 22, 2020, between Shell Energy North America (US), L.P. ("Shell Energy") and CITY OF IDAHO FALLS ("CounterParty") (herein sometimes referred to as a "Party" and collectively as the "Parties") regarding the sale of electric capacity and/or electric energy under the terms and conditions set forth below.

BUYER:	Shell Energy North America (US), L.P.
SELLER:	CITY OF IDAHO FALLS
PRODUCT/FIRMNESS:	WSPP Sch. C
PERIOD OF DELIVERY	03/01/2020 through 03/31/2020
QUANTITY:	15 Mws of energy per hour
PRICE:	$ 11.75/Mwhr Fixed
DELIVERY POINT(S):	BPA
SCHEDULING:	NERC Holidays , Hours ending 0100 thru 2400; Monday thru Saturday, Hours ending 0100 thru 0600; Monday thru Saturday, Hours ending 2300 thru 2400; Sunday thru Sunday, Hours ending 0100 thru 2400
TIME ZONE:	PPT
TOTAL MWH:	4,905
SPECIAL CONDITIONS:	Seller and Buyer agree to notify each other as soon as practically possible of any interuption or curtailment affecting this transaction. Seller should notify Coral at 1-(800) 267-2562.

SUBJECT TO MASTER AGREEMENT DATED: WSPP as amended 02/01/2000

No Challenges; Defense of Agreement. Neither Party will exercise any of its respective rights under Section 205 or Section 206 of the Federal Power Acts to challenge or seek to modify any of the rates or other terms and conditions of this Agreement.

Mobile-Sierra.

(a) Absent the agreement of all parties to the proposed change, the standard of review for changes to any portion of this Agreement or any Transaction entered into hereunder proposed by a Party, a non-party, or the Federal Energy Regulatory Commission acting sua sponte, shall be the "public interest" standard of review set forth in United Gas Pipe Line Co. v. Mobile Gas Service Corp., 350 U.S. 332 (1956) and Federal Power Commission v. Sierra Pacific Power Co., 350 U.S. 348 (1956) (the "Mobile-Sierra" doctrine).

(b) The Parties agree that, if and to the extent that FERC adopts a final Mobile-Sierra policy statement in Docket No. PL02-7-000 ("Final Policy Statement"), which requires that, in order to exclude application of the "just and reasonable" standard under Sections 205 and 206 of the Federal Power Act, the Parties must agree to language which varies from that set forth in clause (a) immediately above, then, without further action of either Party, such Section shall be deemed amended to incorporate the specific language in the Final Policy Statement that requires the "public interest" standard of review.

Shell Energy North America (US), L.P.

Deal No. 3641558

This Confirmation sets forth the terms of the transaction into which the Parties have entered into and shall constitute the entire agreement between the Parties relating to the contemplated purchase and sale of electric energy and/or electric capacity please have this confirmation executed by an authorized representative or officer of your company and return via facsimile to (713) 767 5414. If no facsimile objection to this Confirmation has been received by Shell Energy by facsimile transmission by 5:00 p.m., Houston, Texas time, five (5) business days after delivery of this Confirmation to the other Party by facsimile, then this Confirmation (i) shall be binding and enforceable against Counterparty and Shell Energy and (ii) shall be the final expression of all the terms hereof, regardless whether executed by the other Party.

CITY OF IDAHO FALLS		Shell Energy North America (US), L.P.	
By:	Ryan Bracini	By:	John W. Pillion
Name:		Name:	John W. Pillion
Title:	GM	Title:	Confirmations Team Lead
Date:	1/23/20	Date:	01/23/2020

Shell Energy North America (US), L.P.
1000 MAIN ST LEVEL 12
HOUSTON, TX 77002
877-504-2491

January 23, 2020 Deal No. 3641559

CITY OF IDAHO FALLS
140 S CAPITOL AVENUE,
IDAHO FALLS, ID 83405
Fax: 1(208)612-8435

CONFIRMATION AGREEMENT

This confirmation agreement (this "Confirmation" or "Agreement") shall confirm the agreement reached on January 22, 2020, between Shell Energy North America (US), L.P. ("Shell Energy") and CITY OF IDAHO FALLS ("CounterParty") (herein sometimes referred to as a "Party" and collectively as the "Parties") regarding the sale of electric capacity and/or electric energy under the terms and conditions set forth below.

BUYER:	Shell Energy North America (US), L.P.
SELLER:	CITY OF IDAHO FALLS
PRODUCT/FIRMNESS:	WSPP Sch. C
PERIOD OF DELIVERY	04/01/2020 through 06/30/2020
QUANTITY:	35 Mws of energy per hour
PRICE:	$ 13.75/Mwhr Fixed
DELIVERY POINT(S):	BPA
SCHEDULING:	Monday thru Saturday, Hours ending 0700 thru 2200 Excluding NERC Holidays
TIME ZONE:	PPT
TOTAL MWH:	43,120
SPECIAL CONDITIONS:	Seller and Buyer agree to notify each other as soon as practically possible of any interuption or curtailment affecting this transaction. Seller should notify Coral at 1-(800) 267-2562.

SUBJECT TO MASTER AGREEMENT DATED: WSPP as amended 02/01/2000

No Challenges; Defense of Agreement. Neither Party will exercise any of its respective rights under Section 205 or Section 206 of the Federal Power Acts to challenge or seek to modify any of the rates or other terms and conditions of this Agreement.

Mobile-Sierra.

(a) Absent the agreement of all parties to the proposed change, the standard of review for changes to any portion of this Agreement or any Transaction entered into hereunder proposed by a Party, a non-party, or the Federal Energy Regulatory Commission acting sua sponte, shall be the "public interest" standard of review set forth in United Gas Pipe Line Co. v. Mobile Gas Service Corp., 350 U.S. 332 (1956) and Federal Power Commission v. Sierra Pacific Power Co., 350 U.S. 348 (1956) (the "Mobile-Sierra" doctrine).

(b) The Parties agree that, if and to the extent that FERC adopts a final Mobile-Sierra policy statement in Docket No. PL02-7-000 ("Final Policy Statement"), which requires that, in order to exclude application of the "just and reasonable" standard under Sections 205 and 206 of the Federal Power Act, the Parties must agree to language which varies from that set forth in clause (a) immediately above, then, without further action of either Party, such Section shall be deemed amended to incorporate the specific language in the Final Policy Statement that requires the "public interest" standard of review.

Shell Energy North America (US), L.P.

Deal No. 3641559

This Confirmation sets forth the terms of the transaction into which the Parties have entered into and shall constitute the entire agreement between the Parties relating to the contemplated purchase and sale of electric energy and/or electric capacity please have this confirmation executed by an authorized representative or officer of your company and return via facsimile to (713) 767 5414. If no facsimile objection to this Confirmation has been received by Shell Energy by facsimile transmission by 5:00 p.m., Houston, Texas time, five (5) business days after delivery of this Confirmation to the other Party by facsimile, then this Confirmation (i) shall be binding and enforceable against Counterparty and Shell Energy and (ii) shall be the final expression of all the terms hereof, regardless whether executed by the other Party.

CITY OF IDAHO FALLS		Shell Energy North America (US), L.P.	
By:	[signature]	By:	John W. Pillion
Name:		Name:	John W. Pillion
Title:	GM	Title:	Confirmations Team Lead
Date:	1/28/20	Date:	01/23/2020

Shell Energy North America (US), L.P.
1000 MAIN ST LEVEL 12
HOUSTON, TX 77002
877-504-2491

January 23, 2020 Deal No. 3641560

CITY OF IDAHO FALLS
140 S CAPITOL AVENUE,
IDAHO FALLS, ID 83405
Fax: 1(208)612-8435

CONFIRMATION AGREEMENT

This confirmation agreement (this "Confirmation" or "Agreement") shall confirm the agreement reached on January 22, 2020, between Shell Energy North America (US), L.P. ("Shell Energy") and CITY OF IDAHO FALLS ("CounterParty") (herein sometimes referred to as a "Party" and collectively as the "Parties") regarding the sale of electric capacity and/or electric energy under the terms and conditions set forth below.

BUYER:	Shell Energy North America (US), L.P.
SELLER:	CITY OF IDAHO FALLS
PRODUCT/FIRMNESS:	WSPP Sch. C
PERIOD OF DELIVERY	04/01/2020 through 06/30/2020
QUANTITY:	35 Mws of energy per hour
PRICE:	$ 6.50/Mwhr Fixed
DELIVERY POINT(S):	BPA
SCHEDULING:	NERC Holidays , Hours ending 0100 thru 2400; Monday thru Saturday, Hours ending 0100 thru 0600; Monday thru Saturday, Hours ending 2300 thru 2400; Sunday thru Sunday, Hours ending 0100 thru 2400
TIME ZONE:	PPT
TOTAL MWH:	33,320

SPECIAL CONDITIONS: Seller and Buyer agree to notify each other as soon as practically possible of any interuption or curtailment affecting this transaction. Seller should notify Coral at 1-(800) 267-2562.

SUBJECT TO MASTER AGREEMENT DATED: WSPP as amended 02/01/2000

No Challenges; Defense of Agreement. Neither Party will exercise any of its respective rights under Section 205 or Section 206 of the Federal Power Acts to challenge or seek to modify any of the rates or other terms and conditions of this Agreement.

Mobile-Sierra.

(a) Absent the agreement of all parties to the proposed change, the standard of review for changes to any portion of this Agreement or any Transaction entered into hereunder proposed by a Party, a non-party, or the Federal Energy Regulatory Commission acting sua sponte, shall be the "public interest" standard of review set forth in United Gas Pipe Line Co. v. Mobile Gas Service Corp., 350 U.S. 332 (1956) and Federal Power Commission v. Sierra Pacific Power Co., 350 U.S. 348 (1956) (the "Mobile-Sierra" doctrine).

(b) The Parties agree that, if and to the extent that FERC adopts a final Mobile-Sierra policy statement in Docket No. PL02-7-000 ("Final Policy Statement"), which requires that, in order to exclude application of the "just and reasonable" standard under Sections 205 and 206 of the Federal Power Act, the Parties must agree to language which varies from that set forth in clause (a) immediately above, then, without further action of either Party, such Section shall be deemed amended to incorporate the specific language in the Final Policy Statement that requires the "public interest" standard of review.

Shell Energy North America (US), L.P.

Deal No. 3641560

This Confirmation sets forth the terms of the transaction into which the Parties have entered into and shall constitute the entire agreement between the Parties relating to the contemplated purchase and sale of electric energy and/or electric capacity please have this confirmation executed by an authorized representative or officer of your company and return via facsimile to (713) 767 5414. If no facsimile objection to this Confirmation has been received by Shell Energy by facsimile transmission by 5:00 p.m., Houston, Texas time, five (5) business days after delivery of this Confirmation to the other Party by facsimile, then this Confirmation (i) shall be binding and enforceable against Counterparty and Shell Energy and (ii) shall be the final expression of all the terms hereof, regardless whether executed by the other Party.

CITY OF IDAHO FALLS		Shell Energy North America (US), L.P.	
By:		By:	John W. Pillion
Name:		Name:	John W. Pillion
Title:	GM	Title:	Confirmations Team Lead
Date:	1/28/20	Date:	01/23/2020

Shell Energy North America (US), L.P.
1000 MAIN ST LEVEL 12
HOUSTON, TX 77002
877-504-2491

January 24, 2020 Deal No. 3641561

CITY OF IDAHO FALLS
140 S CAPITOL AVENUE,
IDAHO FALLS, ID 83405
Fax: 1(208)612-8435

CONFIRMATION AGREEMENT

This confirmation agreement (this "Confirmation" or "Agreement") shall confirm the agreement reached on January 22, 2020, between Shell Energy North America (US), L.P. ("Shell Energy") and CITY OF IDAHO FALLS ("CounterParty") (herein sometimes referred to as a "Party" and collectively as the "Parties") regarding the sale of electric capacity and/or electric energy under the terms and conditions set forth below.

BUYER:	Shell Energy North America (US), L.P.
SELLER:	CITY OF IDAHO FALLS
PRODUCT/FIRMNESS:	WSPP Sch. C
PERIOD OF DELIVERY	07/01/2020 through 09/30/2020
QUANTITY:	15 Mws of energy per hour
PRICE:	$ 21.75/Mwhr Fixed
DELIVERY POINT(S):	BPA
SCHEDULING:	NERC Holidays , Hours ending 0100 thru 2400; Monday thru Saturday, Hours ending 0100 thru 0600; Monday thru Saturday, Hours ending 2300 thru 2400; Sunday thru Sunday, Hours ending 0100 thru 2400
TIME ZONE:	PPT
TOTAL MWH:	14,640
SPECIAL CONDITIONS:	Seller and Buyer agree to notify each other as soon as practically possible of any interuption or curtailment affecting this transaction. Seller should notify Coral at 1-(800) 267-2562.

SUBJECT TO MASTER AGREEMENT DATED: WSPP as amended 02/01/2000

No Challenges; Defense of Agreement. Neither Party will exercise any of its respective rights under Section 205 or Section 206 of the Federal Power Acts to challenge or seek to modify any of the rates or other terms and conditions of this Agreement.

Mobile-Sierra.

(a) Absent the agreement of all parties to the proposed change, the standard of review for changes to any portion of this Agreement or any Transaction entered into hereunder proposed by a Party, a non-party, or the Federal Energy Regulatory Commission acting sua sponte, shall be the "public interest" standard of review set forth in United Gas Pipe Line Co. v. Mobile Gas Service Corp., 350 U.S. 332 (1956) and Federal Power Commission v. Sierra Pacific Power Co., 350 U.S. 348 (1956) (the "Mobile-Sierra" doctrine).

(b) The Parties agree that, if and to the extent that FERC adopts a final Mobile-Sierra policy statement in Docket No. PL02-7-000 ("Final Policy Statement"), which requires that, in order to exclude application of the "just and reasonable" standard under Sections 205 and 206 of the Federal Power Act, the Parties must agree to language which varies from that set forth in clause (a) immediately above, then, without further action of either Party, such Section shall be deemed amended to incorporate the specific language in the Final Policy Statement that requires the "public interest" standard of review.

Shell Energy North America (US), L.P.

Deal No. 3641561

This Confirmation sets forth the terms of the transaction into which the Parties have entered into and shall constitute the entire agreement between the Parties relating to the contemplated purchase and sale of electric energy and/or electric capacity please have this confirmation executed by an authorized representative or officer of your company and return via facsimile to (713) 767 5414. If no facsimile objection to this Confirmation has been received by Shell Energy by facsimile transmission by 5:00 p.m., Houston, Texas time, five (5) business days after delivery of this Confirmation to the other Party by facsimile, then this Confirmation (i) shall be binding and enforceable against Counterparty and Shell Energy and (ii) shall be the final expression of all the terms hereof, regardless whether executed by the other Party.

CITY OF IDAHO FALLS

By: [signature]

Name:

Title: GM

Date: 1/28/20

Shell Energy North America (US), L.P.

By: John W. Pillion

Name: John W. Pillion

Title: Confirmations Team Lead

Date: 01/24/2020

Shell Energy North America (US), L.P.
1000 MAIN ST LEVEL 12
HOUSTON, TX 77002
877-504-2491

January 23, 2020 Deal No. 3641562

CITY OF IDAHO FALLS
140 S CAPITOL AVENUE,
IDAHO FALLS, ID 83405
Fax: 1(208)612-8435

CONFIRMATION AGREEMENT

This confirmation agreement (this "Confirmation" or "Agreement") shall confirm the agreement reached on January 22, 2020, between Shell Energy North America (US), L.P. ("Shell Energy") and CITY OF IDAHO FALLS ("CounterParty") (herein sometimes referred to as a "Party" and collectively as the "Parties") regarding the sale of electric capacity and/or electric energy under the terms and conditions set forth below.

BUYER:	Shell Energy North America (US), L.P.
SELLER:	CITY OF IDAHO FALLS
PRODUCT/FIRMNESS:	WSPP Sch. C
PERIOD OF DELIVERY	01/24/2020 through 01/31/2020
QUANTITY:	15 Mws of energy per hour
PRICE:	$ 20/Mwhr Fixed
DELIVERY POINT(S):	MONA
SCHEDULING:	Monday thru Saturday, Hours ending 0700 thru 2200 Excluding NERC Holidays
TIME ZONE:	PPT
TOTAL MWH:	1,680
SPECIAL CONDITIONS:	Seller and Buyer agree to notify each other as soon as practically possible of any interuption or curtailment affecting this transaction. Seller should notify Coral at 1-(800) 267-2562.

SUBJECT TO MASTER AGREEMENT DATED: WSPP as amended 02/01/2000

No Challenges; Defense of Agreement. Neither Party will exercise any of its respective rights under Section 205 or Section 206 of the Federal Power Acts to challenge or seek to modify any of the rates or other terms and conditions of this Agreement.

Mobile-Sierra.

(a) Absent the agreement of all parties to the proposed change, the standard of review for changes to any portion of this Agreement or any Transaction entered into hereunder proposed by a Party, a non-party, or the Federal Energy Regulatory Commission acting sua sponte, shall be the "public interest" standard of review set forth in United Gas Pipe Line Co. v. Mobile Gas Service Corp., 350 U.S. 332 (1956) and Federal Power Commission v. Sierra Pacific Power Co., 350 U.S. 348 (1956) (the "Mobile-Sierra" doctrine).

(b) The Parties agree that, if and to the extent that FERC adopts a final Mobile-Sierra policy statement in Docket No. PL02-7-000 ("Final Policy Statement"), which requires that, in order to exclude application of the "just and reasonable" standard under Sections 205 and 206 of the Federal Power Act, the Parties must agree to language which varies from that set forth in clause (a) immediately above, then, without further action of either Party, such Section shall be deemed amended to incorporate the specific language in the Final Policy Statement that requires the "public interest" standard of review.

Shell Energy North America (US), L.P.

Deal No. 3641562

This Confirmation sets forth the terms of the transaction into which the Parties have entered into and shall constitute the entire agreement between the Parties relating to the contemplated purchase and sale of electric energy and/or electric capacity please have this confirmation executed by an authorized representative or officer of your company and return via facsimile to (713) 767 5414. If no facsimile objection to this Confirmation has been received by Shell Energy by facsimile transmission by 5:00 p.m., Houston, Texas time, five (5) business days after delivery of this Confirmation to the other Party by facsimile, then this Confirmation (i) shall be binding and enforceable against Counterparty and Shell Energy and (ii) shall be the final expression of all the terms hereof, regardless whether executed by the other Party.

CITY OF IDAHO FALLS		Shell Energy North America (US), L.P.	
By:	Beau Pugsley	By:	John W. Pillion
Name:		Name:	John W. Pillion
Title:	GM	Title:	Confirmations Team Lead
Date:	1/28/20	Date:	01/23/2020

IDAHO FALLS

MEMORANDUM

FROM: Bear Prairie, General Manager
DATE: Tuesday, February 4, 2020
RE: Idaho Falls Power Service Policy Update

Council Action Desired

☐ Ordinance ☐ Resolution ☐ Public Hearing

☒ Other Action (Approval, Authorization, Ratification, etc)

Consent Agenda for approval

Description, Background Information & Purpose

The Idaho Falls Power Board annually reviews the Service Policy and now seeks approval of the following changes and updates. The edits and changes improve the operations and safety of our electric system.

Relevant PBB Results & Department Strategic Plan

☐ ☒ ☐ ☐ ☐ ☒ ☐ ☐

Improving our service policy with added clarity and safety features demonstrates our readiness for good governance and a safe community. It also supports the customer exchange and safety elements of the IFP Strategic Plan.

Interdepartmental Coordination

n/a

Fiscal Impact

This is a policy review and update, so there is no cost to the IFP budget.

Legal Review

Legal has reviewed and approved the updates to the service policy.

SERVICE POLICY

Effective February 2020

~~Effective July, 2019~~

This Policy provides information on the Idaho Falls Power (IFP) procedures for new and existing services and what will be required of a Customer desiring electric service. This Policy is based in part on current Idaho Falls City Code. It is to be used only as a guide and shall not be considered to be complete with respect to all possible service configurations or special or extenuating circumstances. Questions pertaining to this Policy should be directed to the Engineering Manager, or the Distribution Superintendent at (208) 612-8430. **Any deviations from this Policy must receive prior IFP written approval.**

Formatted: Top: (Thin-thick small gap, Auto, 3 pt Line width), Bottom: (Thick-thin small gap, Auto, 3 pt Line width), Left: (Thin-thick small gap, Auto, 3 pt Line width), Right: (Thick-thin small gap, Auto, 3 pt Line width)

Formatted: Font: 36 pt

Formatted: Centered

Changes new to this edition:

1. Added definitions for Commercial, Infill Lots, Mobile Home Parks, and Residential.

2. ~~Added Section IV to provide design standards for Small Wireless Facilities.~~Added clarification on service requirements throughout.

3. Added option for Contractors to use precast light pole bases.

4. Added conditions for wrapping padmounted equipment.

5. Added clarification on CT metering requirements.

6. Updated Service Policy Figures.

7. Added Service Policy Figures 30 and 31 (Vault and Vault Lid).

8. IFP requires external main disconnects for Residential.

9. Added requirement for Contractor or Customer to install a 1" future use fiber conduit.

10. Added clarification on "daisy chain" secondary services.

Added clarification on Customer Generation requirements.

11.

Formatted: Indent: First line: 0"

Formatted: List Paragraph

Formatted: Indent: First line: 0"

Table of Contents

I. DEFINITIONS: 7
II. SERVICE REQUIREMENTS 9
A. General Service Requirements: 9
B. Commercial Service Requirements 10
C. Commercial Service Requirements for Operation 11
D. Residential Service Requirements 11
E. Multi-Family Service Requirements 13
F. Construction and Temporary Service 13
G. Requesting Changes to Existing Services (service upgrades) 13
H. Illumination of Public Rights-of-Ways 14
I. Required Conductor Clearances 14
J. Fault Current Calculations 15
III. TRENCH AND CONDUIT 17
A. General Requirements 17
B. Primary Conduit 18
C. Secondary Conduits 19
D. Future Use Conduits 21
IV. PADMOUNT EQUIPMENT REQUIREMENTS 21
A. Single-Phase Transformers 21
B. Three-Phase Transformers 22
C. Sectionalizing Cabinets, Ground Sleeves, Secondary Pedestals, and Fiber Boxes 22
D. Modifying Exterior Appearance of Equipment 22
V. GENERAL METERING REQUIREMENTS 23
A. Location of Meters 23
B. Meter/Point of Service Disconnect 24
C. Determining Self-Contained or CT Metering 24
D. Residential Metering Requirements 24
E. Commercial Metering Requirements 24
F. Meter Bases 27
G. Removal of Meters 28

H. Meter Identification 28
I. Master Metering 29
VI. SECURITY LIGHTING 29
A. Program Requirements 29
VII. CUSTOMER GENERATION 29
A. Generation Facility Design and Installation Requirements 30
B. Generation Facility Design Specifications: 30
C. Generation Facility Net-Metering and Power Purchases 33
VIII. ELECTRIC VEHICLE CHARGING STATION PROGRAM REQUIREMENTS 34
A. Electric Vehicle Charging Station Installation 34
IX. SMALL WIRELESS FACILITIES 36
A. Purpose. 36
B. Definitions. 37
C. Locations of Wireless Facilities and Related Ground Equipment. 38
D. Order of Preference regarding SWF attachment to existing facilities and SWF Support Poles. 40
E. Guidelines on Placement 40

I. DEFINITIONS:

CHARGING STATION: IFP-supplied equipment that is leased to a customer for the purpose of charging electrically powered vehicles.

CITY: City of Idaho Falls, Idaho.

COMMERCIAL: Development that is non-residential or, for the purpose of construction and maintenance of the electric infrastructure, a development that is Multi-Family Housing with three or more attached units with a meter pack (master-metered). (See International building code for more information about the commercial classification)

CONTRACTOR: Any person or entity who is doing work that will require electric service or other interaction from IFP. Contractor is a general term that can apply to one (1) or more property developer, owner, owners' agent, or other entity performing work at location.

CT METER: A metering system where the current is measured indirectly with a current transformer.

CUSTOMER: The person(s) who will be the owner(s) of the property where the service is provided and who shall be responsible for the ongoing costs of maintenance and service.

CUSTOMER-GENERATOR: A customer with a small generation facility (solar, wind, etc.) who has a net-metering agreement with IFP.

GENERATION EQUIPMENT: Equipment **(**solar panels, small wind, gas-generators, etc.) used in the generation of electricity.

IFP: The City of Idaho Falls, Idaho, dba Idaho Falls Power.

INFILL LOTS: Platted or unplatted property left after development has been complete or that have been developed in the past and the structures have since been removed that may be subject to line extension fees.

MASTER-METERED: One (1) meter that measures the electrical service for more than one (1) living unit or commercial interest.

MOBILE HOME PARK: ~~Commercial d~~Development that has ~~Multiple Single, Homes~~three or more stand-alone residences on parcel(s) under common ownership~~one lot~~ and typically mobile homes where each unit has a self-supported meter base~~, at each home~~ or that is master metered. This type of development is considered Commercial for the purpose of construction and maintenance of the electric infrastructure.

NESC: National Electric Safety Code, which is the governing standards for electric utilities.

NET ENERGY: The difference between the electricity consumed by the Customer-Generator and the electricity produced by the Customer-Generator's Generation equipment and facility.

NET-METERING: A system in which a small generation facility, (e.g., renewable energy generators), are connected to the power grid and surplus power is transferred onto the grid, allowing customers to offset the cost of power drawn from IFP.

PRIMARY: The parts of the IFP system that are operated at a nominal 15kv phase-phase. Actual operating voltages are 12,400 volts phase-phase and 7,200 volts phase-ground.

RESIDENTIAL: Single Family Home (independent meter attached to a wall), Multi-Family Housing (two units with a meter pack or master-metered), and Single Family Attached (individual service to each house with meter attached to the individual house).

SECONDARY: The parts of the IFP system that are operated below 600 volts.

SELF-CONTAINED METER: A non-instrumented single-phase meter under four hundred (400) amps or a three- (3) phase meter under two hundred (200) amps.

II. SERVICE REQUIREMENTS

SERVICE FEES: CONSISTENT WITH IDAHO FALLS CITY CODE, ALL FEES OR COSTS, APPLICABLE TO LINE EXTENSIONS FOR RESIDENTIAL OR COMMERCIAL INDIVIDUAL CUSTOMERS OR DEVELOPMENTS SHALL BE PAID IN ADVANCE OF ANY INSTALLATION OF ELECTRICAL INFRASTRUCTURE. APPLICABLE FEES ARE PUBLISHED IN THE FEE SCHEDULE ESTABLISHED BY CITY COUNCIL RESOLUTION.

A. General Service Requirements:

1. A Customer desiring new electric service from IFP must first secure a building permit from the City Building Department. For all three-phase ~~projects~~and commercial projects, it is required that the Customer coordinate service plans directly with IFP prior to seeking a building permit. The Customer shall provide a completed transformer load sheet and information necessary for IFP to provide electrical service, including but not necessarily limited to: preferred service location (overhead or underground service), single-phase or three-phase service, total connected load, electric heat and air conditioning load, required voltage, and the number and size of motors with ratings greater than ten (10) horsepower.

~~1.~~2. The International Building Code determines if a building is commercial verses residential for the purpose of construction and maintenance of the electric infrastructure. Power consumption charges and line extension fees are based on the occupancy type and are listed in The Fee Schedule Established by City Council Resolution.

~~2.~~3. The Customer is solely responsible for the selection, installation, and maintenance of all electrical equipment and wiring, on the load side of the point of delivery (other than IFP's meters and apparatus). The Customer shall be responsible to provide adequate protective measures for all electric motor installations.

~~3.~~4. The Customer shall be responsible to install and maintain surge suppressors, auxiliary power units or other protective devices for the protection of computers, computer software and programming, televisions, or other equipment sensitive to voltage spikes, surges, sags, transients, noise interruptions or outages.

~~4.~~5. The Customer shall install and maintain all suitable protective devices and equipment to protect the Customer, life and/or property, from harm or injury from electric current because IFP shall assume no duty to warn or to otherwise assist the Customer in the selection of or use of electrical appliances, tools, equipment, or facilities.

~~5.~~6. Whenever a Customer's equipment has characteristics which causes interference (e.g., harmonics, transients, waveform distortions, fluctuations, etc.) with IFP's

service to other Customers, the Customer causing the interference shall make changes in such equipment or provide, at Customer's expense, additional equipment to eliminate the interference. Power quality of the Customer shall meet the IEEE 519 standard, ANSI C84.1 standard, and City Code 8-5-26.

B. Commercial Service Requirements

1. Commercial services are defined as Non-residential and Multi-Family Housing that has three or more units attached with a meter pack (see International building code).

~~1.~~2. Prior to design, every commercial and industrial Customer shall provide the following information to IFP.~~:~~

a) A plot plan indicating the preferred service entrance location

b) If previously recorded public utility easements or are not available, provide easements to IFP for underground power cable, as indicated on the marked-up plot plan described above. If the indicated easement locations present problems, the Contractor is responsible to obtain permission for a different routing from IFP.

c) Proposed transformer location (final determination will be made by IFP)

d) A completed transformer load sheet (attached to review sheet or by pdf from IFP design)

e) All electrical requirements including number of phases, voltage, connected single-phase and three-phase loads.

f) Determine location of loads, approximate size of loads and possible future load needs. All three-phase underground installations shall be served with Y connected secondary only (i.e. 120/208 or 277/480).

g) IFP's required easements for the electric lines must be included on this plot plan. In general, easements for electric service shall be twelve feet (12') in width.

h) New utility easements less than twelve feet (12') in width require prior approval from IFP design staff. It is the Customer's responsibility to have IFP's designated easements surveyed and dedicated to the City.

i) No service work, cable pulls, or connects will be made unless the site address is posted in a conspicuous place.

~~2.~~3. Determine location of service entrance, approximate size of loads, and an estimate of future electric loads.

~~3.~~4. Provide a meter base, standard power riser, weather head, and/or suitably anchored attachment point to allow connection to IFP's designated service tap point. Install IFP provided CTs.

~~4.~~5. Provide necessary easements to connect the Customer to IFP's designated interconnection point. Easements are required for primary conductor only, except in rare cases where an easement for overhead secondary conductor may be necessary (because it crosses property boundaries).

~~5.~~6. IFP will then provide the meter and current transformers and aerial overhead conductor. Note that no Customer owned equipment will be permitted on IFP's poles.

C. Commercial Service Requirements for Operation

1. The Customer is solely responsible for the selection, installation, and maintenance of all electrical equipment and wiring, on the load side of the point of delivery (other than IFP's meters and apparatus). The Customer shall be responsible to provide adequate protective measures for all electric motor installations.

2. The Customer shall be responsible to install and maintain surge suppressors, auxiliary power units or other protective devices for the protection of computers, computer software and programming, televisions, or other equipment sensitive to voltage spikes, surges, sags, transients, noise interruptions or outages.

3. The Customer shall install and maintain all suitable protective devices and equipment to protect the Customer, life and/or property, from harm or injury from electric current because IFP shall assume no duty to warn or to otherwise assist the Customer in the selection of or use of electrical appliances, tools, equipment, or facilities.

4. Whenever a Customer's equipment has characteristics which causes interference (e.g., harmonics, transients, waveform distortions, fluctuations, etc.) with IFP's service to other Customers, the Customer causing the interference shall make changes in such equipment or provide, at Customer's expense, additional equipment to eliminate the interference. Power quality of the Customer shall meet the IEEE 519 standard, ANSI C84.1 standard, and City Code 8-5-26.

D. Residential Service Requirements

1. Residential services are defined as a Single Family Home, Multi-Family Housing (two units with a meter pack), and Single Family Attached (individual service to each house with meter attached to the individual house).

2. Line extension fees will be established by Resolution of the City Council. Additional clarification for infill lots are as follows:

   a) Infill lots that were planned with services and that have adequate IFP infrastructure are not subject to the per lot fee or other line extension fees. If it is determined that the infrastructure needs upgraded to serve than this will be billed as an extra line extension fee.

Formatted: Heading 4

b) Infill lots that were not planned as a residential lot are subject to the per lot fee.

c) Infill lots that have no IFP power infrastructure fronting or adjacent to the property are subject to the per lot fee plus all other applicable line extension fees to provide power to the property as determined by IFP.

~~1.~~3. New underground residential electric systems shall be installed in front lot locations and shall be determined by IFP. See Section III for trenching and conduit requirements.

~~2.~~4. On all subdivisions the padmounted equipment (including ground sleeves / pedestals, etc.) will not be provided or set until curb and gutter have been installed.

~~3.~~5. Service Entrance and Meter Base:

a) The meter shall be located within five feet (5') of the nearest front corner of the house to the existing transformer or pedestal. Conduit is to have a maximum of 360° degree of bends. Services shall conform to Attached Figures of this Policy. Meter location requirements herein are to be used only as a guide and shall not be considered complete with respect to all possible service configurations or special extenuating circumstances. Any deviation of meter placement must have prior, written approval from IFP. The centerline of the meter should be five feet six inches (5'6") above the finished grade or walkway. If structural details prevent this, the centerline height shall be not less than five feet (5') or more than six feet (6').

~~4.~~6. Power Cables:

a) IFP will provide and install the necessary primary cable. IFP will provide and install the necessary secondary cable for services up to three hundred (300) amps.

b) The cables will be installed in the Contractor provided conduit to connect the Contractors' service point to the City's pad-mounted transformer or pedestal. The Contractor is required to establish a final grade compacted to a minimum of ninety-five percent (95%) of maximum density at each transformer and service pedestal on location large enough for placement of IFP's transformer pad and/or pedestal. See Attached Figures of this Policy. The Contractor should coordinate work with IFP.

c) The Contractor's service entrance equipment must be in place and approved by the electrical inspector before final hookup. Installed conduit shall be inspected by IFP to ensure proper conduit depth and installation. Cable will not be installed until the trench has been backfilled.

~~5.~~7. High Voltage Transformers and Sectionalizing Cabinets:

a) The high voltage equipment shall not be enclosed in any manner which will restrict the dissipation of heat. A ten foot (10') minimum clearance and access must be maintained in front of the cabinet door. A two foot (2') clearance should be maintained on all other sides of the equipment. Fences or landscaping installed within this clearance will be removed at the Customer's expense should servicing be required. See Attached Figures of this Policy.

b) Additionally, overhead service wire length has a maximum length of one hundred twenty-five feet (125').

E. Multi-Family Service Requirements

1. Conduits and conductors used to service the building will be determined by IFP for Residential Only (two units with a meter pack). For Commercial applications (three units or more with a meter pack) conduits and conductors will be determined by the by Contractor or Customer. See Section III for trenching and conduit requirements. —Secondary conductor(s) will be terminated at one (1) point Customer's premises (i.e. main breaker, disconnect or similar tap point). IFP's conductor(s) shall not be used as a bus in gutters, etc.

F. Construction and Temporary Service

1. IFP will charge a fee for the installation and removal of power for a temporary facility to existing infrastructure (e.g., within thirty feet (30') of underground or one hundred twenty-five feet (125') from overhead tap point). This fee will be established by Resolution of the City Council and shall be paid at the City Building Department at the time of building permit application. Due to varied field conditions, the Contractor or Customer will need to coordinate a site visit with IFP staff at (208)612-8430 to determine installation requirements. If providing the service requires pole installation or transformer placement, an additional one-time fee shall be paid to IFP prior to the installation of the temporary service. Temporary Service request forms with current associated fees are available at the Building Department.

2. Examples of temporary facilities include a construction trailer or Christmas tree lot, which would require a line extension and/or transformer. Temporary power service shall be limited to three (3) months post completion for construction projects or to one (1) year of continuous service for non-construction services.

3. The Contractor or Customer must provide service pole and meter base, and have it approved by the City's electrical inspector. The service pole cannot be more than one hundred twenty-five feet (125') from the designated IFP interconnection point. The service pole shall be tall enough to allow for appropriate traffic clearance and be strong enough to support the service conductors.

G. Requesting Changes to Existing Services (service upgrades)

1. Any Customer may request a change to an existing service, including upgrades,

expansion, extension or relocation. Customers requesting change in existing service shall pay labor and materials costs associated with the service change. All payments will be made in advance of the change in service. Residential service upgrades must comport to City Code 10-3-5(Z)(8) for zoning. Primarily, the use of utilities shall not be beyond that reasonably used for residential services, e.g. cryptocurrency mining would not be considered a residential use.

2. The Contractor or Customer shall be responsible for costs incurred by IFP for the repair of any of its facilities damaged by the Contractor or Customer or a third party working on behalf of the Contractor or Customer. IFP will provide information and services in advance of maintenance or construction activities (such as dropping and reconnecting overhead service lines for tree trimming) at no charge, if scheduled during regular business hours.

H. Illumination of Public Rights-of-Ways

1. It shall be the Customer or Contractor's responsibility to provide illumination (street lights) along or within the public rights-of-way contained within a new development.

2. All new light pole foundations and lighting conduits shall be constructed by the Contractor in accordance with current Service Policy Figure 10, ~~and meet~~ ISPWC (Idaho Standards for Public Works Construction), and City of Idaho Falls standard ~~drawings and~~ specifications. IFP will furnish to the Contractor a bolt hole template (pending availability), anchor bolts, nuts, washers, grounding butt plate, and ground wire needed for the installation of the light poles. Contractor may utilize a precast light pole base as long as it matches all specifications.

   ~~2.~~a) The Customer shall purchase or construct a concrete light pole base per current IFP specifications in the location indicated on the IFP Contractor Map. The final light pole location will be determined by IFP. If the Customer chooses to pour in place the pole base, IFP must be contacted for inspection of pole base prior to the base being poured. Light Pole base shall conform to Attached Figures of this Policy. A light pole will not be installed on the pole foundation until it has cured a minimum of seven (7) days. When the temperature is forty (40º) degrees or lower the pole foundation shall be covered with an insulated tarp.

3. Contractor to ensure adequate backfill at proposed light pole bases and utilize ¾" gravel to maximize compaction.

~~3.~~4. IFP will install poles and luminaires with the cost of materials paid by the Contractor prior to installation.

I. Required Conductor Clearances

Commented [SB1]: Do we define the ISPWC anyplace?

Formatted: List Paragraph, Numbered + Level: 1 + Numbering Style: a, b, c, … + Start at: 1 + Alignment: Left + Aligned at: 1.5" + Indent at: 1.75"

1. See Service Policy Figures for required clearances of overhead power lines to driveways, parking lots, alleys, areas of farm and construction equipment, pedestrian traffic, vehicular traffic, railroads, water ways, and other miscellaneous clearance exhibits. If the clearance is not shown please contact IFP staff. Note all clearances are derived from the NESC.

2. Contact IFP at (208) 612-8430 for permits, inspections, authorizations, and clearances not addressed in this Policy.

J. Fault Current Calculations

1. The NEC requires that new service entrance equipment is rated to interrupt the available fault current. To assist customers, IFP is providing the tables below showing a calculated maximum potential secondary fault current (Isc) and the information necessary to allow the calculations of the maximum fault current for most applications.

2. The tables are built with the following assumptions:

a) The tables do not use an infinite buss but the maximum primary fault current of IFP's system which is 8000 amps.

b) The tables were developed with a minimal 15 feet of secondary conductor (wire) is installed from the transformer. For a more accurate calculation the customer can use the actual length of conductor and actual conductor size. Calculating tools such as Eaton Bussmann's FC^2 application can be used.

3-Phase Padmount Transformers					
Transformer KVA	Secondary Voltage L-L	Secondary Voltage L-N	Lowest %Z	Isc w/ 15ft Wire	Wire Size
45	208	120	2.8	4216	4/0
75	208	120	0.9	17773	4/0
75	480	277	1.3	6508	4/0
112.5	208	120	1.2	22129	1-500
112.5	480	277	1.9	6668	4/0
150	208	120	1.1	30138	1-500
150	480	277	1.2	13147	4/0
225	208	120	1.5	35161	2-500
225	480	277	1.4	17074	1-500
300	208	120	1.4	48886	3-500
300	480	277	1.3	23330	1-500
500	208	120	1.5	71114	4-500
500	480	277	1.5	32504	2-500
750	208	120	5.4	34719	6-500
750	480	277	3	25812	3-500
1000	208	120	5.8	42437	8-500
1000	480	277	5.5	19591	4-500
1500	480	277	5.6	27583	5-500
2000	480	277	5.6	35237	7-500
2500	480	277	5.5	42818	8-500

1-Phase Padmount Transformers					
Transformer KVA	Secondary Voltage L-L	Secondary Voltage L-N	Lowest %Z	15ft 1/0 AL Isc L-L	15ft 1/0 AL Isc L-N
15	240	120	1.1	5008	6192
25	240	120	1	8355	9246
37.5	240	120	1.6	7931	8895
50	240	120	1	13950	13131
75	240	120	2.4	9952	10487
100	240	120	1.3	18221	15395
167	240	120	1.8	20181	16286
1-Phase Polemount Transformers					
Transformer KVA	Secondary Voltage L-L	Secondary Voltage L-N	Lowest %Z	15ft #2AL Isc L-L	15ft #2AL Isc L-N
15	240	120	1.1	4721	5382
25	240	120	1	7585	7549
37.5	240	120	1.6	7234	7314
50	240	120	1	11928	9954
75	240	120	2.4	8878	8357
100	240	120	1.3	14917	11202
167	240	120	1.8	16206	11667

III. TRENCH AND CONDUIT

A. General Requirements

1. Please contact the applicable IFP Design staff as noted on the approval drawings or through the main IFP engineering office at (208) 612-8430 prior to starting any trench and conduit work.

2. IFP requires all IFP-owned conductor to be in conduit. The Customer shall provide and install all conduits as required from the IFP identified interconnection location through new or existing easements to the Customer's transformer pad as set out in Section 2.A.1 of this Policy. In the event it is necessary for IFP to loop feed through the Customer's property, the Customer may be required to open an additional trench to place conduit from the transformer to an exit point from the Customer's property. The Customer may also be required to provide easements for the trench. All electric conduits shall be PVC Schedule 40 (see note 3 and 4 for exceptions). All elbows shall be PVC Schedule 40 large radius sweep (36") or as otherwise specified by IFP (see note 3 and 4 for exceptions). RGS elbows and conduit must be used at riser poles or where conduit will be exposed out of the ground. Conduits must be capped and labeled to identify routing. No conduit run shall have more than 360 degrees of bends. Maximum lengths of conduit runs shall be determined by IFP. Conduit shall only be bent with approved methods (i.e., blanket warmer or rigid conduit bender).~~, n~~ No torches allowed~~)~~.

3. 2" HDPE SDR 13.5 continuous duct with pre-lubricated ribbed interior wall can be utilized by the Contractor instead of 2 ½" PVC Schedule 40 as specified on the Contractor Map for proposed 1/0 single phase primary conductor. Conduit to be red in color or black with red stripes (red conduit preferred). If possible HDPE to be ordered with "IFP" stamped on conduit. The HDPE can be turned up inside of ground sleeves and secondary pedestals or Contractor may transition to 2" PVC Schedule 40 large radius sweep (36") with Perma-Guard/UL fittings by Arnco Shur-Lock II or approved equal by IFP.

~~4. Minimum conduit depth can be reduced to eighteen inches (18") of cover below final grade through basalt or other rock upon prior approval of IFP. Rigid galvanized steel (RGS) conduit shall be provided and installed by the Contractor. IFP will specify the conduit size.~~

~~5.~~4. On all conduit runs of 75 feet or greater and all services from the meter base to the transformer / secondary pedestal; the contractor will install 2500 lb. "mule tape".

~~6.~~5. Contractor will install pull string for fiber optic conduit runs (future use conduit).

~~7.~~6. Developer / Contractor shall provide all construction staking and layout of new

electrical facilities per design.

~~8.~~7. All conduit, including bell ends, shall be supplied and installed by the Contractor. Bell ends shall be installed at transformers, secondary pedestals, sectionalizing cabinets, and light pole locations. See attached Figures of this Policy for installation guidelines. Conduits must be capped and labeled to identify routing.

B. Primary Conduit

1. The minimum power trench shall have a minimum depth of fifty-four inches (54") and maximum depth of sixty inches (60") below finish grade (Conduit to be installed 48" below finish grade). Including 6" of sand bedding below and above top of conduits. See below for bedding requirements. Minimum trench width shall be twenty-four inches (24"), unless otherwise noted. Before final backfill, IFP shall be notified when the conduit is in place. IFP will inspect all conduit installations before backfilling for proper depth and installation. Trench to be backfilled within two weeks of IFP conduit installation. Failure to obtain an inspection prior to backfill may result in the re-excavation of the trench.

2. Minimum primary conduit depth can be reduced to eighteen inches (18") of cover below final grade through basalt or other rock upon prior approval of IFP. Rigid galvanized steel (RGS) conduit shall be provided and installed by the Contractor where trench depth is less than forty-eight inches (48"). IFP will specify the conduit size.

3. IFP will specify the conduit size. Contact applicable IFP staff upon completion of pulling a mandrel through the conduit to ensure the conduit is free from obstructions. Any additional or future costs due to broken, damaged, obstructed or poorly assembled conduits will be paid by the Customer.

4. IFP will provide the pole and all primary conductors, if crossing existing streets with overhead primary conductor to a pole located near the new service location. The Contractor shall provide and install the first length (i.e. ten feet (10') of RGS conduit) up the pole above the contractor supplied RGS elbow. All elbows at the base of the pole shall be a large radius three foot (3') RGS steel. All conduits installed on IFP poles will be on approximately eight inch (8") standoffs.

5. If an underground road crossing is made, the Contractor will provide all conduit and will bore conduit beneath the roadway or provide a trench in which to install conduit. The use of high density polyethylene (HDPE) continuous conduit shall be used at select road crossing locations with prior approval from IFP. Conduit shall be Perma-Guard/UL and fittings shall be Arnco Shur-Lock II or an approved equal approved by IFP. IFP will inspect all conduit installations before backfilling for proper depth and installation. Trenches across existing roadways must also be approved by the City Public Works Department.

6. A minimum of six inches (6") of sand bedding is required above and below all

conduits. An IFP staff may determine that the native soil is suitable for bedding material. Additionally, bury/caution tape shall be buried two feet (2') above the top of conduit. IFP will inspect all conduit installations before backfilling for proper depth and installation. Prior to cable installation, trenches must be backfilled and transformer and sectionalizing cabinet ground sleeves as well as secondary pedestals must be in place.

7. In all cases the Contractor shall be responsible for backfill and compaction of cable trenches and repair of street crossings. Per City standards, all electrical trenches shall be compacted to a minimum of ninety-five percent (95%) of maximum density to prevent settlement. Failure to properly repair the street wherein defects (e.g. settlement) appear within one (1) year will result in the City billing the responsible party for all costs incurred by the City to fix the roadway.

8. A minimum of one foot (1') clearance shall be maintained between primary high voltage cable and all other utilities and service voltage cables, except at crossings (where a separation should exist to allow future repairs of either utility approximately two inches (2") minimum).

C. Secondary Conduits

1. The trench for secondary conduit shall have a minimum depth of thirty inches (30") below final grade. Minimum trench width shall be twenty-four inches (24"), unless otherwise noted. Before final backfill, IFP shall be notified when the conduit is in place. IFP will inspect all conduit installations before backfilling for proper depth and installation. Trench to be backfilled within two weeks of IFP conduit installation. Failure to obtain an inspection prior to backfill may result in the re-excavation of the trench.

2. Minimum secondary conduit depth can be reduced to eighteen inches (18") of cover below final grade through basalt or other rock upon prior approval of IFP. Rigid galvanized steel (RGS) conduit shall be provided and installed by the Contractor where trench depth is less than ~~forty-eight~~thirty inches (30"). IFP will specify the conduit size.

3. IFP will specify the conduit size (exception: commercial secondary conduit). Contact applicable IFP staff upon completion of pulling a mandrel through the conduit to ensure the conduit is free from obstructions. Any additional or future costs due to broken, damaged, obstructed or poorly assembled conduits will be paid by the Customer.

4. The Customer provides, installs and retains ownership of all commercial secondary service conductors and conduits from building (or load) to transformer (or source).

5. When service can be met from an existing power pole, the Contractor shall install all secondary cable to the pole and shall provide sufficient secondary cable to

reach from the pole top connection point to the Customer's meter base or other point of connection.

6. The Customer shall provide and install the first length (i.e. ten feet (10') RGS conduit up the pole above the contractor supplied RGS elbow. All conduits installed on IFP poles will be on approximately eight inches (8") standoffs. Since the secondary trench and cable are the Customer's responsibility, no easements will be required by IFP. All future maintenance, locating, and repair of secondary shall be the Customer's responsibility.

7. Contractor shall provide and install necessary meter bases, current transformer (CT) boxes, and install IFP provided CTs in CT boxes. Commercial metering requirements are contained in Section V. of this Policy, with additional commercial metering requirements in Section V.E. of this Policy.

8. Following such installations, IFP will install meter, meter wiring, etc.; place a transformer on the concrete pad; pull primary cable through Contractor-installed conduit; and connect primary cables to the primary terminals of the pad-mounted transformer. IFP makes up secondary connections in the transformer and provides connectors for standard cable up to and including five hundred (500) kcm. If greater than five hundred (500) kcm cable is to be used, the Contractor provides connectors and/or other special facilities. Finally, IFP connects the primary cable to its power system at the designated tap point after all requirements are met.

9. Where the service is fed from an overhead transformer, the Contractor or Customer will install conduit to the pole where the transformer is mounted.

   a) The Contractor or Customer will install rigid galvanized, three- (3') foot radius elbow and one (1) ten (10') foot length of rigid galvanized steel conduit up the pole (for residential the size of conduit is to be determined in Contractor's Map, for commercial the size is determined by Electrician).

   b) The Contractor or Customer will provide enough conductor to make connection to the transformer and coil it at the top of the end of the riser.

   c) Schedule forty (40) PVC is acceptable only if mounted within the framed wall. If surface mounted on the house or self-supported meter base, the riser to the meter base and adjacent elbow shall be RGS.

   d) IFP will inspect all conduit installations before backfilling for proper depth and installation. Meter base shall be framed and braced before the power cable will be pulled into the base. After IFP inspects conduit, an authorization for backfill sticker will be placed on conduit or meter base.

   e) All trenches will be compacted to a minimum of ninety-five percent (95%) of maximum density to prevent settlement.

f) It shall be the property owner's responsibility to maintain integrity of secondary conduit at their expense.

10. On residential secondary conduit extensions, IFP will provide transformer ground sleeves, ground rods, and secondary pedestals. Following IFP providing the ground sleeve and pedestal, and before transformer or service pedestal is installed, the Contractor shall install two ten foot (10') length of two and one-half inches (2½") schedule 40 PVC secondary conduit with three foot radius (3') sweep, if required from each transformer and/or pedestal on approximately a 45° degree angle into each lot to be served with electrical service (unless otherwise noted on Contractor's Map). See Attached Figures of this Policy.

a) Three inch (3") conduit with three foot radius (3') sweeps shall be required from pedestal or transformer to the meter panel if residential service has a 400 amp panel. Coordinate with IFP.

~~10.~~11. Any residential secondary service that is connected from another secondary service or has multiple services interconnecting (daisy chain) will be deemed Commercial. IFP will not be responsible nor maintain those services.

D. Future Use Conduits

1. Contractor shall provide and install two inch (2") future use conduit (fiber conduit) in the trench per Contractor's Map.

a) Future use conduit (fiber conduit) shall be stubbed up into Idaho Falls Power supplied fiber boxes.

b) Location of fiber boxes shall be determined by Idaho Falls Power.

2. Contractor or Customer shall provide and install one inch (1") future use (fiber conduit) from existing fiber box to the house.

a) Minimum of 24" of burial depth.

b) Contractor or Customer to ensure both ends of the conduit ~~at house is~~are capped off with a PVC cap and marked Idaho Falls Fiber.

IV. PADMOUNT EQUIPMENT REQUIREMENTS

A. Single-Phase Transformers

~~1.~~ Transformer ground sleeves and ground rods shall be provided by IFP, but shall be picked up at the IFP warehouse and/or ~~west side yard~~IFP designated facility and installed by the Contractor in conformance with Attached Figures of this Policy. The ground sleeve location shall be compacted to a minimum of ninety-five percent (95%) of maximum density prior to placement. The top of the transformer pad shall be installed a minimum of six inches (6") above final grade. The pad shall be level and aligned accordingly. A minimum ten foot (10') clear area is required in front of the transformer and a minimum of two foot (2')

Formatted: Heading 4

Formatted: Heading 3

Formatted: Indent: Left: 1", No bullets or numbering

clearance is required on the other three (3) sides of the transformer. The transformer location will be determined by IFP.~~.~~

B. Three-Phase Transformers

1. The Customer shall purchase or construct a concrete transformer pad per current IFP specifications in the location indicated on the marked-up plot plan. A minimum ten foot (10') clear area is required in front of the transformer pad and a minimum of two foot (2') clearance is required on the other three (3) sides of the pad. The final transformer location will be determined by IFP. If the Customer chooses to pour their own pad, IFP must be contacted for inspection of transformer form prior to the pad being poured. Pad design shall conform to Attached Figures this Policy. The pad location shall be compacted to a minimum of ninety-five percent (95%) of maximum density prior to concrete placement. The pad shall be level and aligned accordingly. A transformer will not be installed on the pad until it has cured a minimum of seven (7) days. No more than eight (8) conduits on the secondary side of a transformer shall be installed. When the temperature is forty (40º) degrees or lower the pad shall be covered with an insulated tarp. Transformer ground sleeves and ground rods shall be provided by IFP, but shall be picked up at the IFP warehouse and installed by the Contractor in conformance with Attached Figures of this Policy.

   a) When more than eight conduits are required for the secondary service, coordinate with IFP for the installation of a secondary cabinet to be located adjacent to the transformer. This secondary cabinet will also be used for the CT metering equipment in many applications.

C. Sectionalizing Cabinets, Ground Sleeves, Secondary Pedestals, and Fiber Boxes

1. Primary sectionalizing cabinet, ground sleeves, ground rods, secondary pedestals, and fiber boxes shall be provided by IFP, but shall be picked up at the IFP warehouse and/or ~~west side yard~~IFP designated facility and installed by the Contractor in conformance with Attached Figures of this Policy. The top of the sectionalizing ground sleeve shall be installed a minimum of six inches (6”) above final grade. A minimum ten foot (10’) clear area is required in front of the primary voltage switch cabinet and a minimum of two foot (2)’ clearance is required on the other three (3) sides. The location of the ground sleeves, ground rods, and secondary pedestals will be determined by IFP.

D. Modifying Exterior Appearance of Equipment

Formatted: Heading 2

1. Painting of IFP padmounted equipment shall not be allowed. Wrapping will be allowed with preapproval only. Conditions include; all of ~~our~~standard warning placards and transformer data to be included in the wrap, the wrap cannot cover the fins due to cooling requirements, and no commercial advertising.

~~1. .~~

Formatted: Heading 1

V. GENERAL METERING REQUIREMENTS

These general metering requirements cover only the common meter installations. Infrequent or special applications which usually require the approval of IFP, are not included in these metering requirements. Wiring diagrams and other meter information may be obtained from the IFP Metering Department. All meters installed by IFP are owned by IFP and all maintenance of the meters shall be completed by IFP.

A. Location of Meters

1. Protection from ice, snow, rain or other damage shall be provided by the Customer for metering equipment, when location so demands. A meter shall not be located where it will be subjected to shock, vibration, or other damage. The Customer shall be responsible for the cost of repair for damage to the metering equipment due to lack of protection.
2. Meters shall be installed on the exterior of the structure and at a location which will be readily accessible at all times for reading, inspecting and testing. The meter shall not be contained inside a cabinet or utility closet.
3. Residential meters shall be front yard accessible unless prior approval for another location from IFP is obtained.
4. Meters shall be installed only in sockets which are plumb in all directions and securely fastened to the structure.
5. The centerline of the meter should be five foot, six inches (5’6”) above the finished grade or walkway. If structural details prevent this, the center line height shall be not less than four feet (4’) or more than six feet (6’) in height. See Attached Figures of this Policy.
6. In multiple meter installations such as apartment buildings or shopping centers, meters may be mounted in horizontal rows. The maximum allowable height from ground or walkway to the center line of the meter shall be six foot, six inches (6’6”). The minimum allowable height shall be two feet (2’).
7. In apartment or multiple-use buildings, meters shall not be installed above the first-story level or in the basement.
8. Sufficient access and working space shall be provided around all metering equipment to permit ready and safe operation, maintenance and testing of such equipment, with a minimum of three feet (3’) front working space, minimum of 6 feet, 6 inches (6’6”) head room and a minimum of three feet (3’) wide plus permitting 180° degree opening of equipment doors or hinged panels.
9. Meters shall NOT be mounted on IFP owned poles or pad mount transformers.
10. If a service has been disconnected for any reason, IFP reserves the right to require an inspection prior to energizing~~s~~.

~~9.~~

B. Meter/Point of Service Disconnect

1. ~~IFP strongly recommends an external~~External main disconnect(s) shall be required on all Residential points of service~~e~~.

   a) Provides point of disconnect for Customer side work up to and including the main panel.

   b) Provides an accessible fire department point of disconnect in the event of a structure fire.

   c) Provides an accessible location of IFP to drop the load when working on the meter.

   d) External main disconnect will not be required if there is a dedicated transformer for the load and if the transformer has a disconnect switch inside of it.

~~c)~~2. IFP strongly recommends an external main disconnect on Commercial points of service.

C. Determining Self-Contained or CT Metering

1. If a Customer is CT metered, the metering shall be only for one (1) building under residential or commercial rate.

2. The City will require CT meters for all single-phase services greater than four hundred (400) amps and all three-phase services of greater than two hundred (200) amps.

D. Residential Metering Requirements

1. All single-phase Customers with a main switch ampacity between two hundred one (201) and four hundred (400) amperes will be metered with a self-contained meter three hundred twenty (320) amp meter base. See Section V.E. of this Policy for meter base requirements.

E. Commercial Metering Requirements

1. All meters, self-contained meters, voltage and current leads, used with instrument transformers, shall be furnished and installed by IFP meter department personnel. CTs shall be furnished by IFP. Installation of CTs shall be coordinated with IFP meter department personnel.

2. All three-phase Customers with a main switch ampacity up to and including two hundred (200) amperes will be metered with a self-contained meter. All loads in excess of two hundred (200) amperes will be CT metered.

3. All meters or instrument transformers must be ahead of the Customer's

Formatted: Heading 2

Formatted: Heading 3

disconnecting switch. Where multiple meter installations are required and a main switch is used, meters may be installed behind the main switch and ahead of the Customer's disconnect. No unmetered circuits will be connected to the main switch. Entrance wiring must be so arranged that metered circuits do not enter conduits, raceways or enclosures containing unmetered circuits.

4. CT installations shall not be more than fifty feet (50') from the meter base. Contractor shall install minimum one inch (1") conduit for metering conductors only. Underground metering conduit shall be buried twenty-four inches (24") in depth. Schedule 40 PVC with RGS above ground into meter base. CTs must be contained within a CT can or approved switchgear. A CT shall not be placed in transformers. If no building wall is available for mounting, see Free Standing CT Meter in Attached Figures of this Policy.

5. Enclosures for CTs shall be furnished and installed by the Customer (unless otherwise noted). Line and load connections shall be clearly labeled along with labeling all phases. All enclosures shall be at least eleven inches (11") deep and of such size as to permit ready installation of current transformers on the size of conductor used. The table of enclosures for CTs, will be used as a guide for the minimum nominal size of metal cabinet to be used. All enclosures and meter bases shall have provisions for installing security seals and shall be installed at an accessible location on outside of building. IFP will not allow any Customer equipment to be installed on, or holes drilled in the transformer. Enclosures for CTs will be used on both underground and overhead instrument metered installations. The top of CT enclosure shall not exceed six feet (6') above finished grade. The bottom of CT enclosure shall not be less than two feet (2') above finished grade. Any variances to these requirements shall be determined by IFP.

   a) For services greater than ~~1,001 amps~~801 amps, the CT metering will be installed in an IFP approved padmounted CT cabinet located adjacent to the transformer (~~.~~ Contractor may use wall mounted CT enclosure for service ampacities of greater than 801~~–1200~~ amps if the CT enclosure is rated for and meets minimum UL ratings). Contractor to provide CT cabinet (See Attached Figure 16 of this Policy). CT cabinet to be split bus per American Midwest Power Service Connection Cabinet or approved equal. Coordinate with IFP for required footprint and termination detail. Ground sleeve and ground rod shall be provided by Contractor and installed in conformance with Attached Figures of this Policy. The ground sleeve location shall be compacted to a minimum of ninety-five percent (95%) of maximum density prior to placement. The top of the CT ground sleeve shall be installed a minimum of six inches (6") above final grade. A concrete pad can be utilized instead of a ground sleeve but must have an 18"-24" deep basement for the conduits. Concrete pad must meet CT cabinet manufacturer standards for

strength of the fully loaded CT cabinet and be a minimum of six inches (6") above finished grade. A minimum three foot (3') clear area is required in front of the CT cabinet and a minimum of two foot (2') clearance is required on the other three (3) sides of the CT cabinet. The CT cabinet location will be determined by IFP. Conductor will be provided and installed by IFP from Transformer to padmounted CT Cabinet on services greater than 801 amps ~~CT cabinet~~. 4" conduit from Transformer to CT cabinet can have 24" radius elbows. CT Cabinet will be owned and maintained by Developer / Owner. CT Cabinet to be secured by an IFP-owned padlock.

1) CT Cabinet must meet minimum specifications given from American Midwest Power drawing "Service Connection Cabinet 'SCC' with CT provision" as follows or approved equal:

    a. Cabinet is free standing NEMA 3R. Frame is 12 gauge steel galvanized steel bolted together and include leveling provisions. All side plates re pan formed galvanized steel and are bolted to the frame with tamper-resistant zinc plated bolts. Enclosure is primed and painted transformer green enamel.

    b. Supporting structure for bus bars is bolted to framework such as that any phase bar can be relocated vertically as required to meet job requirements.

    c. Bus Bars are electrical grade plated aluminum #6101T65 per ASTM specifications # B317 supported on 17" centers using double plastic insulators Copper bus available on special order. Current density is 750A/square inch maximum for Aluminum bus and 1000A/square inch maximum for Copper bus. Each bus bar is punched with 16 sets of 9/16" square holes on 2" horizontally and 1 ¾" centers vertically.

    d. Ratings are 2000A, 2500A, 3000A, 3600A, and 4000A at 600V maximum 3Ø-4W, 3Ø-3W, 1Ø-3W. All cabinets shall have bus braced for 85,000A RMS amperes short circuit current rating.

    e. Connectors in a range of #2 to 750 MCM are available in set screw type or compression type for field or factory installation. Connectors will be factory installed on right side of bus unless otherwise specified. Up to (12) – 750 MCM or (24) – 250MCM conductors can be installed on each side, per bar.

f. Adjustable Throats painted transformer green are available to connect to CT cabinet to the Power Company's transformer. The standard dimensions are 12H" x 12W" adjustable in length from 12" to 23". Other sizes are available on special orders.

g. Meets Standards – ETL listed and labeled conforms to U.L. standard 1773 termination boxes. Conforms to NEMA standards. Meets National Electrical Code requirements. Meets Power Company requirements.

6. CT meter bases located within six feet (6') of the pad mount transformer shall be grounded and bonded to transformer to prevent touch potential.

ENCLOSURE FOR CURRENT TRANSFORMERS (CTs)

Service Entrance Conductor Ampacity	Minimum ~~Transformer~~ CT Cabinet Size (W x H x D)
401 & Above - 10	36" x 48" x 11" (hinged door type) or smaller cabinet as approved by IFP
400 & Below - 30	~~24" x 24" x 11"~~
401 - 800	36" x 48" x 11" (hinged door type)
~~801 - 1000~~	~~24" x 48" x 11"~~
Over ~~1000~~801	36" x 48" x 11" (hinged door type) ~~36" x 48" x 14" (hinged door type)~~ To be coordinated and approved by IFP

F. Meter Bases

These meter base specifications cover all self-contained meter bases and transformer-rated meter bases.

1. The Customer or Contractor shall furnish meter bases and enclosures for all meter installations. All meter bases and enclosures will be installed by the Contractor and incorporated into the Customer's wiring.

2. Meter bases must be listed and installed to meet the National Electric Code and the National Electric Safety Code. Combination socket and disconnecting devices are approved for use, provided the base meets all other specifications and is wired on the line-side of the Customer's disconnecting device. Corrosion inhibitor shall be used on all connections to aluminum conductors.

3. All self-contained commercial service installations shall have factory installed lever or link bypass.

   a) IFP will allow exceptions to the bypass requirements for services with minimal and interruptible load. Services for commercial sprinkler systems controls is an example.

4. IFP will not provide new three-phase, three-wire self-contained service without a grounded neutral system.

5. Single-Phase Meter Bases

   a) Single-phase 320 amp residential meter base shall have factory installed lever or link bypass. Single-phase meter bases over four hundred (400) ampere shall be CT instrument metered using six (6) point socket type meter base with drilled and tapped mounting plate for test switch provisions.

   b) All 120/208V self-contained single-phase meter base installations shall be of a five (5) terminal socket-type meter base and installed such that the fifth terminal is in the 9 o'clock position.

6. Three-Phase Meter Bases

   a) Two hundred (200) ampere and below self-contained meter base installations on three-phase service shall be a seven (7) point terminal socket type meter base.

   b) Three-phase meter bases greater than two hundred (200) ampere's shall have a CT instrument metered installation using a thirteen (13) terminal socket-type meter base with a drilled and tapped mounting plate for connection of test switch equipment.

G. Removal of Meters

1. Only authorized IFP personnel shall be allowed to remove meters from meter bases on the Customer's premises.

H. Meter Identification

1. Prior to the meter installation, IFP must be provided with a plan or diagram indicating which meter socket serves which unit. All meter sockets must be marked with the applicable unit address by some permanent means (i.e., not hand written with a "Sharpie") at a location on or near meter base.

I. Master Metering

1. IFP's retail rates are intended for application to individual customers or units of service. Master metering is prohibited. Except as specifically excepted hereinafter. Master metered mobile home parks, multi-occupant residential buildings, commercial buildings and shopping centers connected prior to July 1, 2010, may continue to receive master metered service.

2. Mobile Home Parks built before July 1, 2010, whose space for tenants have been sub-metered by the park Owners, need not be individually metered by IFP. Mobile home park tenants will be charged the same rate for electric service, as though they were directly metered and billed by IFP.

3. Multi-occupant residential buildings, commercial buildings and shopping centers may be master metered if the electric heating, ventilation, air conditioning or water heating systems are centrally located and cannot be controlled by the individual tenants.

4. A Master-Metered Customer may install sub-metering for individual spaces at the Customer's own expense. Any master metering system must be maintained by the building owner and installed by licensed electricians. Master metered Customers may also utilize a reasonable allocation procedure to determine a tenant's usage for the purpose of reimbursing the master metered customer. Such a procedure shall constitute an allocation and not a resale. Such terms must comply with City Code 8-5-9. The Customer shall indemnify IFP for any and all liabilities, actions or claims for injury, loss or damage to persons or property arising from the allocation of service by the customer.

5. IFP will not sell or otherwise provide meters or associated equipment required for sub-metering, nor test and maintain customer owned meters.

VI. SECURITY LIGHTING

A. Program Requirements

1. IFP can provide security lighting for private property for a fixed monthly charge.

2. The Customer will pay a fixed monthly charge for each luminaire, based upon the type of luminaire and wattage. The rates are published in the City Fee Resolution.

3. Security lights can only be affixed to IFP owned poles with the cost of installation paid by the Customer.

4. The City retains ownership of all facilities and equipment.

5. For more information contact IFP Energy Services at (208) 612-8430.

VII. CUSTOMER GENERATION

A. Generation Facility Design and Installation Requirements

1. All new electric generation equipment that a Customer desires to connect to the IFP distribution system shall be approved by IFP prior to connecting the generation equipment to the IFP distribution system.

2. Customer's operating such generation equipment are required to file a Customer Interconnection Agreement Application and adhere to the following conditions:

B. Generation Facility Design Specifications:

1. Facility Description

a) The Generation Facility shall be designed, constructed and operated in a manner such that it will interconnect and operate in parallel with IFP's electric supply system, in a safe and efficient manner without disruption, impairment, damage or loss of operational efficiency to IFP's electric supply system.

b) The operation of the Generation Facility is intended ~~primarily~~ to offset ~~part or all of~~a Customer-Generator's electric energy purchases from Idaho Falls Power.

c) The Customer-Generator shall be responsible for the design, installation and operation of the generation system and shall obtain and maintain all required permits and approvals.

d) Any modifications to the system (aside from routine maintenance), including installation of additional generation equipment, replacement panels, or added parts shall only be made following the prior written approval of IFP.

2. Facility Fuel Type and Size Limitations

a) The customer's Generation Facility shall have a maximum ~~peak~~ annual generating capacity of no more than ~~fifteen (15) kilowatts (kW) for equipment installed on a residential premise and twenty-five (25) kilowatts (kW) for equipment installed on a commercial premise~~the previous twelve (12) months of electric usage. Facilities found to be in excess of approved size will not be compensated for net-monthly surplus energy sent to IFP.

~~3. Larger capacity systems will be allowed based upon the customer's historic usage, but system sizing shall not exceed the average of the previous twelve (12) months of electric usage.~~

~~4.~~3. Generation Facility Installation Standards and Code Compliance:

a) Customer-Generator shall provide the electrical interconnection on the Customer-Generator side of the meter between the Generation Facility and IFP's system.

b) IFP shall make reasonable modifications to their system necessary to accommodate the generation system, with all IFP system modifications being paid for by the Customer. The cost for such modifications will be estimated

by IFP, with Customer payment due in advance of installation.

c) The Generation Facility shall include all equipment necessary to meet applicable safety, power quality, and interconnection requirements. These requirements are, or may include,

(1) IFP's policies
(2) National Electrical Code
(3) National Electrical Safety Code
(4) Institute of Electrical and Electronic Engineers (e.g., IEEE 1547),
(5) Nationally Recognized Testing Laboratories (e.g., UL 1741)
(6) California Rule 21
(7) Hawaii Rule 14H
(8) Utility best practices.

d) IFP Engineering staff must approve each design drawing prior to construction of the Generation Facility. The drawings must comport to generally accepted engineering design practices and be submitted with the application. This review will be completed within thirty (30) days of application.

e) Upon completion of construction, the City Electrical Inspector shall give final inspection and approval for the Generation Facility to commence operation.

f) The Customer-Generator shall attend an orientation session with Idaho Falls Power staff. Call (208) 612-8456 for more information.

g) The Customer-Generator shall then file an application for Net-Metering and Small Generation Interconnection Agreement Application with, and receive approval from, IFP before installing an interconnected Generation Facility on Customer-Generator property. Application forms are available at the City of Idaho Falls Building Department. The completed application and Generation Facility system design drawing should be returned to the address listed on the application. The City of Idaho Falls Building Department will also require a building permit and electrical permit along with an additional copy of the system design for review. Review by the City of Idaho Falls Building Department and IFP will occur simultaneously. IFP may withhold approval, if for any reason the requested interconnection would result in a negative monetary or physical impact on IFP's electrical system.

~~5.~~4. Disconnection Device:

a) Customer-Generator shall furnish and install (on Customer-Generator side of the meter) a disconnecting device capable of fully disconnecting and isolating the facility from IFP's distribution system.

(1) The disconnecting device shall be located adjacent to IFP's bi-directional metering equipment and shall be of the visible break type, located in a metal enclosure that can be secured by an IFP-owned

padlock or other security device.

(2) The disconnecting device shall be accessible to IFP's personnel at all times and shall conform to National Electric Code standards.

(3) IFP shall have the right to disconnect, with or without notice, the Generation Facility from IFP's distribution system in order to maintain safe and reliable electrical operating conditions or to protect IFP's system from damage, disruption, interference, or to preserve system reliability.

(4) The Generation Facility shall remain disconnected until such time that IFP determines conditions justifying the disconnection have been resolved.

~~6.~~5.Generation Facility Operational Standards:

a) Customer-Generator shall furnish, install, operate and maintain in good order and repair, without cost to IFP, all equipment required for the safe operation of the Generation Facility operating in parallel with the IFP's electrical supply system. This shall include, but is not limited to, equipment necessary to

(1) Establish and maintain automatic synchronism with IFP's distribution system,

(2) Automatically disconnect the Generation Facility from IFP's distribution system in the event of system overload or outage and

(3) For Solar Facilities with backup battery storage, the system must automatically disconnect from and not back feed onto, IFP's distribution system in the event of a system overload or power disruption.

(4) The Customer-Generator's Generation Facility shall not cause any adverse effects upon the quality or reliability of service provided to IFP's other customers.

(5) IFP reserves the right to require that the Generation Facility modifications to comport with Idaho Falls electrical system change in needs or requirements or to negate any adverse impact the interconnected Facility has on other customers.

(6) The Generation Facility shall not cause any adverse effects upon the quality or reliability of service provided to IFP's other customers.

(7) The Customer-Generator shall operate the Generation Facility in accordance with applicable rules and regulations.

b) On an approximate ~~three year~~three-year rotation, the Customer is required to confirm the status of the generation facility. In addition, IFP reserves the right to inspect the facility at any time for non-backfeed protection for utility safety requirements.

(1) IFP reserves the right to disconnect the generation facility, or if required the full service if the customer fails to confirm the status of the generation facility or allow for safety inspections.

~~7.~~6. Generation Facility Maintenance:

a) Except for bi-directional metering equipment owned and maintained by IFP, all equipment on the Customer-Generator's side of the meter, including the required disconnecting switch, shall be provided and maintained in satisfactory operating condition by the Customer-Generator at the Customer's expense and shall remain the property and responsibility of the Customer-Generator. IFP shall bear no liability for Customer-Generator's equipment or for the consequences of its operation.

C. Generation Facility Net~~-~~-Metering and Power Purchases

1. Measurement of Net Energy:

a) Metering equipment shall be installed by IFP (solely at Customer-Generator's expense) to measure the flow of electrical energy to and from the customer premise.

2. Purchase of Energy:

a) The Customer-Generator agrees to sell, and IFP agrees to issue a credit for, all electrical energy generated at the Generation Facility in excess of the Customer-Generator's on-site load in accordance with the current City fee~~rate~~ resolution.

b) WHERE CONSUMPTION EXCEEDS GENERATION:

(1) If electricity supplied by Idaho Falls Power during the billing period exceeds the electricity generated by the Customer-Generator during the billing period, the Customer-Generator:

(a) Shall be billed for the applicable non-energy charges for the billing period under the Customer's appropriate retail rate classification;
(b) Shall be billed for the net electricity supplied by IFP at the Customer's appropriate rate adopted in ordinance for the corresponding period.

c) WHERE GENERATION EXCEEDS CONSUMPTION:

(1) If the electricity generated by the Customer-Generator exceeds the electricity supplied by IFP during the billing period the Customer-Generator:

(a) Shall be billed for the applicable non-energy charges for the billing period under the Customer's appropriate rate classification;
(b) Shall be financially credited for excess energy delivered to Idaho Falls Power during the billing period, at the rate adopted in ordinance for the corresponding period.

3. Renewable Energy Credits

a) The Customer-Generator will release to IFP all renewable-energy credits (RECs), renewable-energy credits (S-RECs) or other renewable attributes as appropriate based on actual on-site electric generation from the Generation Facility. Credits will be released to IFP for the duration of the interconnection to IFP's power system.

VIII. ELECTRIC VEHICLE CHARGING STATION PROGRAM REQUIREMENTS

A. Electric Vehicle Charging Station Installation

1. The following are Customer requirements for those who choose to participate in an IFP electric vehicle charging station lease:

a) Location

(1) The Customer is responsible for the selection of the charging station location, for both wall mount and pedestal mount charging stations with approval from IFP. Location must be approved by IFP prior to installation. IFP staff is available to assist in selecting suitable locations. To schedule an onsite assessment with an IFP representative, call (208) 612-8430.

b) Installation

(1) The Customer will be responsible to install the pedestal concrete pad base, conduit and wire, or conduit and wire for a wall mount location. See Attached Figures for the specification sheets for the pedestal installation. IFP is solely responsible for the installation of the charging station on the customers premise. If a charging station is to be installed on premises, which is leased, rather than owned, Customer must receive all necessary consent from the premises owner for the installation of the Charging Station by the Customer and allow access for operation and maintenance by IFP.

(2) Customer is responsible for acquiring all applicable permits and inspections for the construction and installation of the Station. In the event that an upgrade in electric service or wiring is required to support the stated load of the Station this will be the sole responsibility of the Customer.

(3) The Customer is responsible for all costs (labor and materials) associated with the installation site preparation: trenching, conduit, cement pedestal base, wire, etc.

c) Maintenance and Repair

(1) Standard Maintenance

(a) IFP will perform standard maintenance to the charging station to ensure it is in proper working condition throughout the term of the

program. Maintenance includes cleaning the charging station connector, testing the charging voltage level, testing system functionality, and related minor work, as reasonably determined by IFP, to preserve the unimpaired function of the charging station.

(b) Customer will provide IFP access to the charging station and related equipment for maintenance between the hours of 7:00 a.m. and 7:00 p.m. local time on City business days. In the case of an emergency, Customer will allow IFP access, with notice, to the charging station and related equipment outside of normal maintenance times.

(2) Equipment Damage

(a) Customer is responsible, at its sole cost and expense, for actions related to the repair and replacement of a negligently damaged charging station to include vandalism.

(b) The Customer agrees that the facilities in which the charging station is located will be kept clean and in good repair.

(c) Customer will maintain structural portions of the premises surrounding the Charging Station, including the pavement, foundation, roof structure, walls, columns, beams, parking areas, and all adjoining common areas, in good condition and repair.

(d) If temporary removal of the Charging Station is required in connection with the repair of the Charging Station or building structure, Customer will provide IFP five (5) business day's prior written notice or a shorter but reasonable period in the event of an emergency.

(e) Customer may interrupt electric service to a Charging Station to ensure safety or when needed to repair or maintain the premises. After completion of the repairs or maintenance, Customer will promptly restore the affected charging station and notify IFP.

(f) IFP will not be responsible for damages caused by operation of the Charging Station, including failure of equipment to operate as intended.

(g) IFP will not be held responsible for any damage to the Customer's property or electrical system due to negligent use of or vandalism to the Charging Station.

(3) Continuity of service

(a) IFP will use reasonable diligence to supply constant electricity service to the charging station but does not guarantee the service against an irregularity or interruption.

(b) IFP may interrupt electric service to a Charging Station when necessary to maintain reliability of the electric distribution system, ensure safety, reduce peak demand, or to perform maintenance on

the Charging Station or related equipment.

(c) IFP may install and operate additional meter(s), data monitoring equipment, or charge management devices which gather information regarding equipment usage.

(d) Such installation will be adjacent to or near the Charging Station but will not interfere with parking or pedestrian traffic paths on premises.

(4) Labeling and signage

(a) Charging Stations will be labeled by IFP.

(b) The Lessee will not remove, mar, deface, obscure, or otherwise tamper with the Charging Station labels.

(c) Customer can install signage provided by IFP or others (as approved by IFP) to identify charging station sponsor and provide information about Charging Station care.

(5) Charging Station Locations

(a) Charging Stations will be placed on the customer side of the electric meter.

(b) Power used by the Station will flow through the Customers meter and be billed at their appropriate rate class for the customer type as established in the current adopted rate resolution.

(c) The energy consumed by the Station(s) will not be metered separately or tracked independently of the Customers other electric usage at the location on the appropriate meter.

IX. SMALL WIRELESS FACILITIES

A. Purpose.

1. To provide design standards for Small Wireless Facilities (SWFs) also known as small cell installations. These standards are intended for 4G and 5G equipment installed on Idaho Falls Power (IFP) infrastructure located in the City of Idaho Falls and located in City-owned or City-controlled rights-of-ways and easements, but are also applicable to similar technologies such as wi-fi networks.

2. The City of Idaho Falls (City) encourages the deployment of small cell wireless technology within the City for the benefit it provides the citizens of Idaho Falls including increased connectivity and reliable networks and services.

3. The City desires to add this infrastructure with minimal negative impact to the character and aesthetics of our community.

4. The City has a fiduciary duty to manage the public right-of-way (ROW) for the health, safety, and welfare of the public.

5. These Design Standards are for siting and criteria for the installation of Wireless Facilities, including SWFs permitted by the City to be installed.

B. Definitions.

Applicable Codes. International building, fire, electrical, plumbing, or mechanical codes adopted by a recognized national code organization; and adopted by the City with local amendments.

City. The City of Idaho Falls, Idaho and its officers and employees.

City Park. An area that is zoned or otherwise designated by the City as a public park for the purpose of recreational activity.

Collocate or collocation. The installation, mounting, maintenance, modification, operation, or replacement of SWF in a City-owned or City-controlled public ROW on or adjacent to a pole.

Concealment, decorated or camouflaged. Any SWF or Pole that is covered, blended, painted, wrapped, disguised, camouflaged or otherwise concealed or decorated such the SWF blends into the surrounding environment and is visually unobtrusive as allowed as a condition for City approval. Camouflage may consist of but not limited to; hidden beneath a façade, blended with surrounding area design, painted to match the supporting area, or disguised with artificial tree branches.

Decorative pole. A pole specially designed and placed for aesthetic purposes.

Design District. An area that is zoned, or otherwise designated by the City and for which the City maintains and enforces unique design and aesthetic standards on a uniform and nondiscriminatory basis.

Downtown District. The portion in the City's downtown area that is identified as having historic or aesthetic preservation or enhancement needs by the Zoning Code.

Easement. Includes any public easement or other compatible use created by dedication, or by other means, to the City for public utility purposes or any other purpose.

Highway ROW. ROW adjacent to a state or federal highway.

Historic District. An area that is zoned or otherwise designated as a historic district under City, state or federal code.

Hydroelectric Project. All hydroelectric facilities and lands within the FERC licensed boundaries of Project 2842 the Idaho Falls Project and Project 2952 the Gem State Project.

Local. Within the geographical boundaries of the City.

Location City approved and lawfully permitted location for the SWF.

Macro tower. A guyed or self-supported pole or monopole greater in height than standard street light poles or traffic signal masts.

Small Wireless Facility (SWF). As defined by City Zoning Code-

Network Provider or Provider. A wireless service provider or a person that does not provide wireless services and that is not an electric utility but builds or installs on behalf of a wireless service provider. a SWF

License. A written authorization for the use of the public ROW or collocation on a service pole required from the City before a network provider may perform an action or initiate, continue, or complete a project over which the City has police power.

Pole. A service pole, municipally owned utility pole, or SWF Support Pole. Poles that have conductor energized at 44kV or higher are excluded from this definition.

Private easement. An easement or other real property right that is only for the benefit of the grantor and grantee and their successors and assigns.

Public Right-of-Way or Rights of Way (ROW). The area on, below, or above a public roadway, highway, street, public sidewalk, alley, waterway, or utility easement in which the City has an ownership interest or controls through contractual means. The term does not include a private easement or the airwaves above a public ROW, with regard to wireless telecommunications.

Service pole. A pole, other than a municipally owned utility pole, owned or operated by the City and located in a public ROW, including: a pole that supports traffic control functions, a structure for signage, a pole that supports lighting (other than a decorative pole); and a pole or similar structure owned or operated by the City and supporting only SWF

Traffic Signal. Any device, whether manually, electrically, or mechanically operated by which traffic is alternately directed to stop and proceed.

Wireless service. Any service, using licensed or unlicensed wireless spectrum, including the use of Wi-Fi, whether at a fixed location or mobile, provided to the public using a SWF

Wireless service provider. A person or company that provides wireless service to the public.

C. Locations of Wireless Facilities and Related Ground Equipment.

1. Most Preferable Locations

   a) Public Right-of-Way

   b) Industrial Areas

   c) Retail and Commercial areas

2. Less Preferable Locations

   a) Historic, Design, and Downtown Districts

      Any area designated by the City as a Historic, Design, or Downtown District will be subject to aesthetic requirements such as Camouflage at the nondiscriminatory discretion of the City.

   b) Municipal Parks

ROW located in or adjacent to a street or thoroughfare that is adjacent to a municipal park or undeveloped land that is designated for a future park by zoning

3. Prohibited or Restricted Areas for Certain Wireless facilities, except with Separate City Agreement or Subject or Concealment Conditions.

   a) Residential Areas

      ROW that is adjacent to lots or undeveloped land that is designated for residential use by zoning.

      If a SWF is installed in a residential area it shall not be placed in public-utility-easement located outside of the platted ROW.

4. Historic, Design, and Downtown Districts.

   a) As a condition for approval of SWF in Historic, Design and Downtown Districts, the City shall require reasonable design decoration, Camouflage, or Concealment measures for the SWF. The City requests that a Network Provider explore the feasibility of using concealment, decoration, wrapping, or Camouflage measures to improve the aesthetics of the SWF, or related ground equipment, or any portion of the nodes, poles, or equipment, to minimize visual impacts.

   b) Network Provider shall comply with and observe all applicable City, State, and Federal historic preservation laws and requirements.

   c) Each license application shall disclose if it is within a District with Decorative Poles or in an area of the City zoned or otherwise designated as a Historic, Design or Downtown District.

5. Historic Landmarks

   a) A Network Provider is discouraged from installing a SWF within 300 feet of a historic site or structure or Historic Landmark recognized by the City, state or federal government. It is advised that each license application disclose if it is within 300 feet of such a structure.

6. Undergrounding Requirements

   a) A Network Provider shall comply with nondiscriminatory undergrounding requirements, including City ordinances, zoning regulations, state law, private deed restrictions, and other public or private restrictions, that prohibit installing aboveground structures in a ROW without first obtaining zoning or land use approval.

   b) Areas may be designated from time to time by the City as Underground Requirement Areas in accordance with filed plats and or conversions of overhead to underground areas, as may be allowed by law.

c) Each license application shall disclose if it is within an area that has undergrounding requirements.

7. Exceptions

The City at its sole, undiscriminatory, discretion may grant exception to the above prohibited locations and sizes.

D. Order of Preference regarding SWF attachment to existing facilities and SWF Support Poles.

1. The preference is for all electronics except the antennae to be located in a ground mounted cabinet located behind existing walkways.
2. Existing non-decorative street light poles
3. Traffic signal structures when such installation will not interfere with the integrity of the SWF and will not interfere with the safety of the public.
4. New SWF poles located in non-residential areas at signalized intersections.
5. Ground Equipment should be minimal and the least intrusive alternative.

E. Guidelines on Placement

1. Generally Network Provider shall construct and maintain SWF and SWF Support Poles in a Manner that does not:

a) Obstruct, impede, or hinder the usual travel or public safety on a public ROW;

b) Obstruct the legal use of a public ROW by other utility providers;

c) Violate nondiscriminatory applicable codes;

d) Violate or conflict with the City's publicly disclosed public ROW management policies or zoning ordinances;

e) Violate the ADA; or.

f) Violate City noise or nuisance standards

2. Licensing.

a) As defined in City Code, Idaho Falls Service Policy, City Design Criteria, and a Master License Agreement with each Network Provider or carrier.

b) All new equipment placed in the ROW shall require a ROW permit. This permit will ensure review of traffic and pedestrian safety and to review potential impacts from planned construction projects.

3. SWF facilities placement.

a) ROW. SWFs with related ground equipment shall be placed, as much as possible within two (2') feet at the outer edge of the ROW line to minimize

any obstruction, impediment to the usual travel or public safety on a ROW.

b) Height above ground: SWF attachments to a pole shall be installed at least eight (8) feet above the ground, and if a SWF attachment is projecting toward the street, the attachment shall be installed no less than sixteen (16) feet above the ground.

c) SWF Spacing: SWFs shall be no closer to another SWF than a minimum of three hundred (300') feet, unless by Conditional Use Permit.

d) Installations on Traffic Signals: Installation on traffic signal structures must:

(1) Be encased in a separate conduit than the traffic light electronics,
(2) Have a separate electric power connection than the structure,
(3) Have a separate access point than the structure, and
(4) Be clear of any current or potential attachment of traffic control devices (signal and signs) and ancillary devices (detection, preemption, surveillance, etc.) and not constitute a violation of the Manual on Uniform Traffic Control Devices (MUTCD).
(5) SWFs will not be allow on any sign post located in the ROW.

4. New SWF Support Poles.

a) All new poles must be selected from the current Idaho Falls Power list of acceptable poles by Valmont or approved equivalent.

SERVICE POLICY

Effective February 2020

This Policy provides information on the Idaho Falls Power (IFP) procedures for new and existing services and what will be required of a Customer desiring electric service. This Policy is based in part on current Idaho Falls City Code. It is to be used only as a guide and shall not be considered to be complete with respect to all possible service configurations or special or extenuating circumstances. Questions pertaining to this Policy should be directed to the Engineering Manager, or the Distribution Superintendent at (208) 612-8430. **Any deviations from this Policy must receive prior IFP written approval.**

Changes new to this edition:

1. Added definitions for Commercial, Infill Lots, Mobile Home Parks, and Residential.
2. Added clarification on service requirements throughout.
3. Added option for Contractors to use precast light pole bases.
4. Added conditions for wrapping padmounted equipment.
5. Added clarification on CT metering requirements.
6. Updated Service Policy Figures.
7. Added Service Policy Figures 30 and 31 (Vault and Vault Lid).
8. IFP requires external main disconnects for Residential.
9. Added requirement for Contractor or Customer to install a 1" future use fiber conduit.
10. Added clarification on "daisy chain" secondary services.
11. Added clarification on Customer Generation requirements.

Table of Contents

I. DEFINITIONS: 5
II. SERVICE REQUIREMENTS 7
A. General Service Requirements: 7
B. Commercial Service Requirements 8
C. Commercial Service Requirements for Operation 9
D. Residential Service Requirements 9
E. Multi-Family Service Requirements 11
F. Construction and Temporary Service 11
G. Requesting Changes to Existing Services (service upgrades) 11
H. Illumination of Public Rights-of-Ways 12
I. Required Conductor Clearances 12
J. Fault Current Calculations 13
III. TRENCH AND CONDUIT 15
A. General Requirements 15
B. Primary Conduit 16
C. Secondary Conduits 17
D. Future Use Conduits 19
IV. PADMOUNT EQUIPMENT REQUIREMENTS 19
A. Single-Phase Transformers 19
B. Three-Phase Transformers 19
C. Sectionalizing Cabinets, Ground Sleeves, Secondary Pedestals, and Fiber Boxes 20
D. Modifying Exterior Appearance of Equipment 20
V. GENERAL METERING REQUIREMENTS 20
A. Location of Meters 21
B. Meter/Point of Service Disconnect 21
C. Determining Self-Contained or CT Metering 22
D. Residential Metering Requirements 22
E. Commercial Metering Requirements 22
F. Meter Bases 25
G. Removal of Meters 26
H. Meter Identification 26

I. Master Metering 26
VI. SECURITY LIGHTING 27
A. Program Requirements 27
VII. CUSTOMER GENERATION 27
A. Generation Facility Design and Installation Requirements 27
B. Generation Facility Design Specifications: 27
C. Generation Facility Net-Metering and Power Purchases 30
VIII. ELECTRIC VEHICLE CHARGING STATION PROGRAM REQUIREMENTS 31
A. Electric Vehicle Charging Station Installation 31
IX. SMALL WIRELESS FACILITIES 34
A. Purpose. 34
B. Definitions. 34
C. Locations of Wireless Facilities and Related Ground Equipment. 36
D. Order of Preference regarding SWF attachment to existing facilities and SWF Support Poles. 37
E. Guidelines on Placement 37

I. DEFINITIONS:

CHARGING STATION: IFP-supplied equipment that is leased to a customer for the purpose of charging electrically powered vehicles.

CITY: City of Idaho Falls, Idaho.

COMMERCIAL: Development that is non-residential or, for the purpose of construction and maintenance of the electric infrastructure, a development that is Multi-Family Housing with three or more attached units with a meter pack (master-metered). (See International building code for more information about the commercial classification)

CONTRACTOR: Any person or entity who is doing work that will require electric service or other interaction from IFP. Contractor is a general term that can apply to one (1) or more property developer, owner, owners' agent, or other entity performing work at location.

CT METER: A metering system where the current is measured indirectly with a current transformer.

CUSTOMER: The person(s) who will be the owner(s) of the property where the service is provided and who shall be responsible for the ongoing costs of maintenance and service.

CUSTOMER-GENERATOR: A customer with a small generation facility (solar, wind, etc.) who has a net-metering agreement with IFP.

GENERATION EQUIPMENT: Equipment **(**solar panels, small wind, gas-generators, etc.) used in the generation of electricity.

IFP: The City of Idaho Falls, Idaho, dba Idaho Falls Power.

INFILL LOTS: Platted or unplatted property left after development has been complete or that have been developed in the past and the structures have since been removed that may be subject to line extension fees.

MASTER-METERED: One (1) meter that measures the electrical service for more than one (1) living unit or commercial interest.

MOBILE HOME PARK: Development that has three or more stand-alone residences on parcel(s) under common ownership and typically mobile homes where each unit has a self-supported meter base, or that is master metered. This type of development is considered Commercial for the purpose of construction and maintenance of the electric infrastructure.

NESC: National Electric Safety Code, which is the governing standards for electric utilities.

NET ENERGY: The difference between the electricity consumed by the Customer-Generator and the electricity produced by the Customer-Generator's Generation equipment and facility.

NET-METERING: A system in which a small generation facility, (e.g., renewable energy generators), are connected to the power grid and surplus power is transferred onto the grid, allowing customers to offset the cost of power drawn from IFP.

PRIMARY: The parts of the IFP system that are operated at a nominal 15kv phase-phase. Actual operating voltages are 12,400 volts phase-phase and 7,200 volts phase-ground.

RESIDENTIAL: Single Family Home (independent meter attached to a wall), Multi-Family Housing (two units with a meter pack or master-metered), and Single Family Attached (individual service to each house with meter attached to the individual house).

SECONDARY: The parts of the IFP system that are operated below 600 volts.

SELF-CONTAINED METER: A non-instrumented single-phase meter under four hundred (400) amps or a three- (3) phase meter under two hundred (200) amps.

II. SERVICE REQUIREMENTS

SERVICE FEES: CONSISTENT WITH IDAHO FALLS CITY CODE, ALL FEES OR COSTS, APPLICABLE TO LINE EXTENSIONS FOR RESIDENTIAL OR COMMERCIAL INDIVIDUAL CUSTOMERS OR DEVELOPMENTS SHALL BE PAID IN ADVANCE OF ANY INSTALLATION OF ELECTRICAL INFRASTRUCTURE. APPLICABLE FEES ARE PUBLISHED IN THE FEE SCHEDULE ESTABLISHED BY CITY COUNCIL RESOLUTION.

A. General Service Requirements:

1. A Customer desiring new electric service from IFP must first secure a building permit from the City Building Department. For all three-phase and commercial projects, it is required that the Customer coordinate service plans directly with IFP prior to seeking a building permit. The Customer shall provide a completed transformer load sheet and information necessary for IFP to provide electrical service, including but not necessarily limited to: preferred service location (overhead or underground service), single-phase or three-phase service, total connected load, electric heat and air conditioning load, required voltage, and the number and size of motors with ratings greater than ten (10) horsepower.

2. The International Building Code determines if a building is commercial verses residential for the purpose of construction and maintenance of the electric infrastructure. Power consumption charges and line extension fees are based on the occupancy type and are listed in The Fee Schedule Established by City Council Resolution.

3. The Customer is solely responsible for the selection, installation, and maintenance of all electrical equipment and wiring, on the load side of the point of delivery (other than IFP's meters and apparatus). The Customer shall be responsible to provide adequate protective measures for all electric motor installations.

4. The Customer shall be responsible to install and maintain surge suppressors, auxiliary power units or other protective devices for the protection of computers, computer software and programming, televisions, or other equipment sensitive to voltage spikes, surges, sags, transients, noise interruptions or outages.

5. The Customer shall install and maintain all suitable protective devices and equipment to protect the Customer, life and/or property, from harm or injury from electric current because IFP shall assume no duty to warn or to otherwise assist the Customer in the selection of or use of electrical appliances, tools, equipment, or facilities.

6. Whenever a Customer's equipment has characteristics which causes interference (e.g., harmonics, transients, waveform distortions, fluctuations, etc.) with IFP's

service to other Customers, the Customer causing the interference shall make changes in such equipment or provide, at Customer's expense, additional equipment to eliminate the interference. Power quality of the Customer shall meet the IEEE 519 standard, ANSI C84.1 standard, and City Code 8-5-26.

B. Commercial Service Requirements

1. Commercial services are defined as Non-residential and Multi-Family Housing that has three or more units attached with a meter pack (see International building code).

2. Prior to design, every commercial and industrial Customer shall provide the following information to IFP:

   a) A plot plan indicating the preferred service entrance location

   b) If previously recorded public utility easements or are not available, provide easements to IFP for underground power cable, as indicated on the marked-up plot plan described above. If the indicated easement locations present problems, the Contractor is responsible to obtain permission for a different routing from IFP.

   c) Proposed transformer location (final determination will be made by IFP)

   d) A completed transformer load sheet (attached to review sheet or by pdf from IFP design)

   e) All electrical requirements including number of phases, voltage, connected single-phase and three-phase loads.

   f) Determine location of loads, approximate size of loads and possible future load needs. All three-phase underground installations shall be served with Y connected secondary only (i.e. 120/208 or 277/480).

   g) IFP's required easements for the electric lines must be included on this plot plan. In general, easements for electric service shall be twelve feet (12') in width.

   h) New utility easements less than twelve feet (12') in width require prior approval from IFP design staff. It is the Customer's responsibility to have IFP's designated easements surveyed and dedicated to the City.

   i) No service work, cable pulls, or connects will be made unless the site address is posted in a conspicuous place.

3. Determine location of service entrance, approximate size of loads, and an estimate of future electric loads.

4. Provide a meter base, standard power riser, weather head, and/or suitably anchored attachment point to allow connection to IFP's designated service tap point. Install IFP provided CTs.

5. Provide necessary easements to connect the Customer to IFP's designated interconnection point. Easements are required for primary conductor only, except in rare cases where an easement for overhead secondary conductor may be necessary (because it crosses property boundaries).

6. IFP will then provide the meter and current transformers and aerial overhead conductor. Note that no Customer owned equipment will be permitted on IFP's poles.

C. Commercial Service Requirements for Operation

1. The Customer is solely responsible for the selection, installation, and maintenance of all electrical equipment and wiring, on the load side of the point of delivery (other than IFP's meters and apparatus). The Customer shall be responsible to provide adequate protective measures for all electric motor installations.

2. The Customer shall be responsible to install and maintain surge suppressors, auxiliary power units or other protective devices for the protection of computers, computer software and programming, televisions, or other equipment sensitive to voltage spikes, surges, sags, transients, noise interruptions or outages.

3. The Customer shall install and maintain all suitable protective devices and equipment to protect the Customer, life and/or property, from harm or injury from electric current because IFP shall assume no duty to warn or to otherwise assist the Customer in the selection of or use of electrical appliances, tools, equipment, or facilities.

4. Whenever a Customer's equipment has characteristics which causes interference (e.g., harmonics, transients, waveform distortions, fluctuations, etc.) with IFP's service to other Customers, the Customer causing the interference shall make changes in such equipment or provide, at Customer's expense, additional equipment to eliminate the interference. Power quality of the Customer shall meet the IEEE 519 standard, ANSI C84.1 standard, and City Code 8-5-26.

D. Residential Service Requirements

1. Residential services are defined as a Single Family Home, Multi-Family Housing (two units with a meter pack), and Single Family Attached (individual service to each house with meter attached to the individual house).

2. Line extension fees will be established by Resolution of the City Council. Additional clarification for infill lots are as follows:

   a) Infill lots that were planned with services and that have adequate IFP infrastructure are not subject to the per lot fee or other line extension fees. If it is determined that the infrastructure needs upgraded to serve than this will be billed as an extra line extension fee.

b) Infill lots that were not planned as a residential lot are subject to the per lot fee.

c) Infill lots that have no IFP power infrastructure fronting or adjacent to the property are subject to the per lot fee plus all other applicable line extension fees to provide power to the property as determined by IFP.

3. New underground residential electric systems shall be installed in front lot locations and shall be determined by IFP. See Section III for trenching and conduit requirements.

4. On all subdivisions the padmounted equipment (including ground sleeves / pedestals, etc.) will not be provided or set until curb and gutter have been installed.

5. Service Entrance and Meter Base:

   a) The meter shall be located within five feet (5') of the nearest front corner of the house to the existing transformer or pedestal. Conduit is to have a maximum of 360° degree of bends. Services shall conform to Attached Figures of this Policy. Meter location requirements herein are to be used only as a guide and shall not be considered complete with respect to all possible service configurations or special extenuating circumstances. Any deviation of meter placement must have prior, written approval from IFP. The centerline of the meter should be five feet six inches (5'6") above the finished grade or walkway. If structural details prevent this, the centerline height shall be not less than five feet (5') or more than six feet (6').

6. Power Cables:

   a) IFP will provide and install the necessary primary cable. IFP will provide and install the necessary secondary cable for services up to three hundred (300) amps.

   b) The cables will be installed in the Contractor provided conduit to connect the Contractors' service point to the City's pad-mounted transformer or pedestal. The Contractor is required to establish a final grade compacted to a minimum of ninety-five percent (95%) of maximum density at each transformer and service pedestal on location large enough for placement of IFP's transformer pad and/or pedestal. See Attached Figures of this Policy. The Contractor should coordinate work with IFP.

   c) The Contractor's service entrance equipment must be in place and approved by the electrical inspector before final hookup. Installed conduit shall be inspected by IFP to ensure proper conduit depth and installation. Cable will not be installed until the trench has been backfilled.

7. High Voltage Transformers and Sectionalizing Cabinets:

a) The high voltage equipment shall not be enclosed in any manner which will restrict the dissipation of heat. A ten foot (10') minimum clearance and access must be maintained in front of the cabinet door. A two foot (2') clearance should be maintained on all other sides of the equipment. Fences or landscaping installed within this clearance will be removed at the Customer's expense should servicing be required. See Attached Figures of this Policy.

b) Additionally, overhead service wire length has a maximum length of one hundred twenty-five feet (125').

E. Multi-Family Service Requirements

1. Conduits and conductors used to service the building will be determined by IFP for Residential Only (two units with a meter pack). For Commercial applications (three units or more with a meter pack) conduits and conductors will be determined by the by Contractor or Customer. See Section III for trenching and conduit requirements. Secondary conductor(s) will be terminated at one (1) point Customer's premises (i.e. main breaker, disconnect or similar tap point). IFP's conductor(s) shall not be used as a bus in gutters, etc.

F. Construction and Temporary Service

1. IFP will charge a fee for the installation and removal of power for a temporary facility to existing infrastructure (e.g., within thirty feet (30') of underground or one hundred twenty-five feet (125') from overhead tap point). This fee will be established by Resolution of the City Council and shall be paid at the City Building Department at the time of building permit application. Due to varied field conditions, the Contractor or Customer will need to coordinate a site visit with IFP staff at (208)612-8430 to determine installation requirements. If providing the service requires pole installation or transformer placement, an additional one-time fee shall be paid to IFP prior to the installation of the temporary service. Temporary Service request forms with current associated fees are available at the Building Department.

2. Examples of temporary facilities include a construction trailer or Christmas tree lot, which would require a line extension and/or transformer. Temporary power service shall be limited to three (3) months post completion for construction projects <u>or</u> to one (1) year of continuous service for non-construction services.

3. The Contractor or Customer must provide service pole and meter base, and have it approved by the City's electrical inspector. The service pole cannot be more than one hundred twenty-five feet (125') from the designated IFP interconnection point. The service pole shall be tall enough to allow for appropriate traffic clearance and be strong enough to support the service conductors.

G. Requesting Changes to Existing Services (service upgrades)

1. Any Customer may request a change to an existing service, including upgrades,

expansion, extension or relocation. Customers requesting change in existing service shall pay labor and materials costs associated with the service change. All payments will be made in advance of the change in service. Residential service upgrades must comport to City Code 10-3-5(Z)(8) for zoning. Primarily, the use of utilities shall not be beyond that reasonably used for residential services, e.g. cryptocurrency mining would not be considered a residential use.

2. The Contractor or Customer shall be responsible for costs incurred by IFP for the repair of any of its facilities damaged by the Contractor or Customer or a third party working on behalf of the Contractor or Customer. IFP will provide information and services in advance of maintenance or construction activities (such as dropping and reconnecting overhead service lines for tree trimming) at no charge, if scheduled during regular business hours.

H. Illumination of Public Rights-of-Ways

1. It shall be the Customer or Contractor's responsibility to provide illumination (street lights) along or within the public rights-of-way contained within a new development.

2. All new light pole foundations and lighting conduits shall be constructed by the Contractor in accordance with current Service Policy Figure 10, ISPWC (Idaho Standards for Public Works Construction), and City of Idaho Falls standard specifications. IFP will furnish to the Contractor a bolt hole template (pending availability), anchor bolts, nuts, washers, grounding butt plate, and ground wire needed for the installation of the light poles. Contractor may utilize a precast light pole base as long as it matches all specifications.

    a) The Customer shall purchase or construct a concrete light pole base per current IFP specifications in the location indicated on the IFP Contractor Map. The final light pole location will be determined by IFP. If the Customer chooses to pour in place the pole base, IFP must be contacted for inspection of pole base prior to the base being poured. Light Pole base shall conform to Attached Figures of this Policy. A light pole will not be installed on the pole foundation until it has cured a minimum of seven (7) days. When the temperature is forty (40º) degrees or lower the pole foundation shall be covered with an insulated tarp.

3. Contractor to ensure adequate backfill at proposed light pole bases and utilize ¾" gravel to maximize compaction.

4. IFP will install poles and luminaires with the cost of materials paid by the Contractor prior to installation.

I. Required Conductor Clearances

1. See Service Policy Figures for required clearances of overhead power lines to driveways, parking lots, alleys, areas of farm and construction equipment, pedestrian traffic, vehicular traffic, railroads, water ways, and other miscellaneous clearance exhibits. If the clearance is not shown please contact IFP staff. Note all clearances are derived from the NESC.

2. Contact IFP at (208) 612-8430 for permits, inspections, authorizations, and clearances not addressed in this Policy.

J. Fault Current Calculations

1. The NEC requires that new service entrance equipment is rated to interrupt the available fault current. To assist customers, IFP is providing the tables below showing a calculated maximum potential secondary fault current (Isc) and the information necessary to allow the calculations of the maximum fault current for most applications.

2. The tables are built with the following assumptions:

a) The tables do not use an infinite buss but the maximum primary fault current of IFP's system which is 8000 amps.

b) The tables were developed with a minimal 15 feet of secondary conductor (wire) is installed from the transformer. For a more accurate calculation the customer can use the actual length of conductor and actual conductor size. Calculating tools such as Eaton Bussmann's FC^2 application can be used.

3-Phase Padmount Transformers					
Transformer KVA	Secondary Voltage L-L	Secondary Voltage L-N	Lowest %Z	Isc w/ 15ft Wire	Wire Size
45	208	120	2.8	4216	4/0
75	208	120	0.9	17773	4/0
75	480	277	1.3	6508	4/0
112.5	208	120	1.2	22129	1-500
112.5	480	277	1.9	6668	4/0
150	208	120	1.1	30138	1-500
150	480	277	1.2	13147	4/0
225	208	120	1.5	35161	2-500
225	480	277	1.4	17074	1-500
300	208	120	1.4	48886	3-500
300	480	277	1.3	23330	1-500
500	208	120	1.5	71114	4-500
500	480	277	1.5	32504	2-500
750	208	120	5.4	34719	6-500
750	480	277	3	25812	3-500
1000	208	120	5.8	42437	8-500
1000	480	277	5.5	19591	4-500
1500	480	277	5.6	27583	5-500
2000	480	277	5.6	35237	7-500
2500	480	277	5.5	42818	8-500

1-Phase Padmount Transformers					
Transformer KVA	Secondary Voltage L-L	Secondary Voltage L-N	Lowest %Z	15ft 1/0 AL Isc L-L	15ft 1/0 AL Isc L-N
15	240	120	1.1	5008	6192
25	240	120	1	8355	9246
37.5	240	120	1.6	7931	8895
50	240	120	1	13950	13131
75	240	120	2.4	9952	10487
100	240	120	1.3	18221	15395
167	240	120	1.8	20181	16286
1-Phase Polemount Transformers					
Transformer KVA	Secondary Voltage L-L	Secondary Voltage L-N	Lowest %Z	15ft #2AL Isc L-L	15ft #2AL Isc L-N
15	240	120	1.1	4721	5382
25	240	120	1	7585	7549
37.5	240	120	1.6	7234	7314
50	240	120	1	11928	9954
75	240	120	2.4	8878	8357
100	240	120	1.3	14917	11202
167	240	120	1.8	16206	11667

III. TRENCH AND CONDUIT

A. General Requirements

1. Please contact the applicable IFP Design staff as noted on the approval drawings or through the main IFP engineering office at (208) 612-8430 prior to starting any trench and conduit work.

2. IFP requires all IFP-owned conductor to be in conduit. The Customer shall provide and install all conduits as required from the IFP identified interconnection location through new or existing easements to the Customer's transformer pad as set out in Section 2.A.1 of this Policy. In the event it is necessary for IFP to loop feed through the Customer's property, the Customer may be required to open an additional trench to place conduit from the transformer to an exit point from the Customer's property. The Customer may also be required to provide easements for the trench. All electric conduits shall be PVC Schedule 40 (see note 3 and 4 for exceptions). All elbows shall be PVC Schedule 40 large radius sweep (36") or as otherwise specified by IFP (see note 3 and 4 for exceptions). RGS elbows and conduit must be used at riser poles or where conduit will be exposed out of the ground. Conduits must be capped and labeled to identify routing. No conduit run shall have more than 360 degrees of bends. Maximum lengths of conduit runs shall be determined by IFP. Conduit shall only be bent with approved methods (i.e., blanket warmer or rigid conduit bender). No torches allowed.

3. 2" HDPE SDR 13.5 continuous duct with pre-lubricated ribbed interior wall can be utilized by the Contractor instead of 2 ½" PVC Schedule 40 as specified on the Contractor Map for proposed 1/0 single phase primary conductor. Conduit to be red in color or black with red stripes (red conduit preferred). If possible HDPE to be ordered with "IFP" stamped on conduit. The HDPE can be turned up inside of ground sleeves and secondary pedestals or Contractor may transition to 2" PVC Schedule 40 large radius sweep (36") with Perma-Guard/UL fittings by Arnco Shur-Lock II or approved equal by IFP.

4. On all conduit runs of 75 feet or greater and all services from the meter base to the transformer / secondary pedestal; the contractor will install 2500 lb. "mule tape".

5. Contractor will install pull string for fiber optic conduit runs (future use conduit).

6. Developer / Contractor shall provide all construction staking and layout of new electrical facilities per design.

7. All conduit, including bell ends, shall be supplied and installed by the Contractor. Bell ends shall be installed at transformers, secondary pedestals, sectionalizing cabinets, and light pole locations. See attached Figures of this Policy for

installation guidelines. Conduits must be capped and labeled to identify routing.

B. Primary Conduit

1. The minimum power trench shall have a minimum depth of fifty-four inches (54”) and maximum depth of sixty inches (60”) below finish grade (Conduit to be installed 48” below finish grade). Including 6” of sand bedding below and above top of conduits. See below for bedding requirements. Minimum trench width shall be twenty-four inches (24"), unless otherwise noted. Before final backfill, IFP shall be notified when the conduit is in place. IFP will inspect all conduit installations before backfilling for proper depth and installation. Trench to be backfilled within two weeks of IFP conduit installation. Failure to obtain an inspection prior to backfill may result in the re-excavation of the trench.

2. Minimum primary conduit depth can be reduced to eighteen inches (18") of cover below final grade through basalt or other rock upon prior approval of IFP. Rigid galvanized steel (RGS) conduit shall be provided and installed by the Contractor where trench depth is less than forty-eight inches (48"). IFP will specify the conduit size.

3. IFP will specify the conduit size. Contact applicable IFP staff upon completion of pulling a mandrel through the conduit to ensure the conduit is free from obstructions. Any additional or future costs due to broken, damaged, obstructed or poorly assembled conduits will be paid by the Customer.

4. IFP will provide the pole and all primary conductors, if crossing existing streets with overhead primary conductor to a pole located near the new service location. The Contractor shall provide and install the first length (i.e. ten feet (10’) of RGS conduit) up the pole above the contractor supplied RGS elbow. All elbows at the base of the pole shall be a large radius three foot (3’) RGS steel. All conduits installed on IFP poles will be on approximately eight inch (8”) standoffs.

5. If an underground road crossing is made, the Contractor will provide all conduit and will bore conduit beneath the roadway or provide a trench in which to install conduit. The use of high density polyethylene (HDPE) continuous conduit shall be used at select road crossing locations with prior approval from IFP. Conduit shall be Perma-Guard/UL and fittings shall be Arnco Shur-Lock II or an approved equal approved by IFP. IFP will inspect all conduit installations before backfilling for proper depth and installation. Trenches across existing roadways must also be approved by the City Public Works Department.

6. A minimum of six inches (6”) of sand bedding is required above and below all conduits. An IFP staff may determine that the native soil is suitable for bedding material. Additionally, bury/caution tape shall be buried two feet (2’) above the top of conduit. IFP will inspect all conduit installations before backfilling for proper depth and installation. Prior to cable installation, trenches must be

backfilled and transformer and sectionalizing cabinet ground sleeves as well as secondary pedestals must be in place.

7. In all cases the Contractor shall be responsible for backfill and compaction of cable trenches and repair of street crossings. Per City standards, all electrical trenches shall be compacted to a minimum of ninety-five percent (95%) of maximum density to prevent settlement. Failure to properly repair the street wherein defects (e.g. settlement) appear within one (1) year will result in the City billing the responsible party for all costs incurred by the City to fix the roadway.

8. A minimum of one foot (1') clearance shall be maintained between primary high voltage cable and all other utilities and service voltage cables, except at crossings (where a separation should exist to allow future repairs of either utility approximately two inches (2") minimum).

C. Secondary Conduits

1. The trench for secondary conduit shall have a minimum depth of thirty inches (30") below final grade. Minimum trench width shall be twenty-four inches (24"), unless otherwise noted. Before final backfill, IFP shall be notified when the conduit is in place. IFP will inspect all conduit installations <u>before</u> backfilling for proper depth and installation. Trench to be backfilled within two weeks of IFP conduit installation. Failure to obtain an inspection prior to backfill may result in the re-excavation of the trench.

2. Minimum secondary conduit depth can be reduced to eighteen inches (18") of cover below final grade through basalt or other rock upon prior approval of IFP. Rigid galvanized steel (RGS) conduit shall be provided and installed by the Contractor where trench depth is less than thirty inches (30"). IFP will specify the conduit size.

3. IFP will specify the conduit size (exception: commercial secondary conduit). Contact applicable IFP staff upon completion of pulling a mandrel through the conduit to ensure the conduit is free from obstructions. Any additional or future costs due to broken, damaged, obstructed or poorly assembled conduits will be paid by the Customer.

4. The Customer provides, installs and retains ownership of all commercial secondary service conductors and conduits from building (or load) to transformer (or source).

5. When service can be met from an existing power pole, the Contractor shall install all secondary cable to the pole and shall provide sufficient secondary cable to reach from the pole top connection point to the Customer's meter base or other point of connection.

6. The Customer shall provide and install the first length (i.e. ten feet (10') RGS

conduit up the pole above the contractor supplied RGS elbow. All conduits installed on IFP poles will be on approximately eight inches (8") standoffs. Since the secondary trench and cable are the Customer's responsibility, no easements will be required by IFP. All future maintenance, locating, and repair of secondary shall be the Customer's responsibility.

7. Contractor shall provide and install necessary meter bases, current transformer (CT) boxes, and install IFP provided CTs in CT boxes. Commercial metering requirements are contained in Section V. of this Policy, with additional commercial metering requirements in Section V.E. of this Policy.

8. Following such installations, IFP will install meter, meter wiring, etc.; place a transformer on the concrete pad; pull primary cable through Contractor-installed conduit; and connect primary cables to the primary terminals of the pad-mounted transformer. IFP makes up secondary connections in the transformer and provides connectors for standard cable up to and including five hundred (500) kcm. If greater than five hundred (500) kcm cable is to be used, the Contractor provides connectors and/or other special facilities. Finally, IFP connects the primary cable to its power system at the designated tap point after all requirements are met.

9. Where the service is fed from an overhead transformer, the Contractor or Customer will install conduit to the pole where the transformer is mounted.

    a) The Contractor or Customer will install rigid galvanized, three- (3’) foot radius elbow and one (1) ten (10’) foot length of rigid galvanized steel conduit up the pole (for residential the size of conduit is to be determined in Contractor’s Map, for commercial the size is determined by Electrician).

    b) The Contractor or Customer will provide enough conductor to make connection to the transformer and coil it at the top of the end of the riser.

    c) Schedule forty (40) PVC is acceptable only if mounted within the framed wall. If surface mounted on the house or self-supported meter base, the riser to the meter base and adjacent elbow shall be RGS.

    d) IFP will inspect all conduit installations before backfilling for proper depth and installation. Meter base shall be framed and braced before the power cable will be pulled into the base. After IFP inspects conduit, an authorization for backfill sticker will be placed on conduit or meter base.

    e) All trenches will be compacted to a minimum of ninety-five percent (95%) of maximum density to prevent settlement.

    f) It shall be the property owner’s responsibility to maintain integrity of secondary conduit at their expense.

10. On residential secondary conduit extensions, IFP will provide transformer ground sleeves, ground rods, and secondary pedestals. Following IFP providing the

ground sleeve and pedestal, and before transformer or service pedestal is installed, the Contractor shall install two ten foot (10') length of two and one-half inches (2½") schedule 40 PVC secondary conduit with three foot radius (3') sweep, if required from each transformer and/or pedestal on approximately a 45° degree angle into each lot to be served with electrical service (unless otherwise noted on Contractor's Map). See Attached Figures of this Policy.

a) Three inch (3") conduit with three foot radius (3') sweeps shall be required from pedestal or transformer to the meter panel if residential service has a 400 amp panel. Coordinate with IFP.

11. Any residential secondary service that is connected from another secondary service or has multiple services interconnecting (daisy chain) will be deemed Commercial. IFP will not be responsible nor maintain those services.

D. Future Use Conduits

1. Contractor shall provide and install two inch (2") future use conduit (fiber conduit) in the trench per Contractor's Map.

a) Future use conduit (fiber conduit) shall be stubbed up into Idaho Falls Power supplied fiber boxes.

b) Location of fiber boxes shall be determined by Idaho Falls Power.

2. Contractor or Customer shall provide and install one inch (1") future use (fiber conduit) from existing fiber box to the house.

a) Minimum of 24" of burial depth.

b) Contractor or Customer to ensure both ends of the conduit are capped off with a PVC cap and marked Idaho Falls Fiber.

IV. PADMOUNT EQUIPMENT REQUIREMENTS

A. Single-Phase Transformers

Transformer ground sleeves and ground rods shall be provided by IFP, but shall be picked up at the IFP warehouse and/or IFP designated facility and installed by the Contractor in conformance with Attached Figures of this Policy. The ground sleeve location shall be compacted to a minimum of ninety-five percent (95%) of maximum density prior to placement. The top of the transformer pad shall be installed a minimum of six inches (6") above final grade. The pad shall be level and aligned accordingly. A minimum ten foot (10') clear area is required in front of the transformer and a minimum of two foot (2') clearance is required on the other three (3) sides of the transformer. The transformer location will be determined by IFP.

B. Three-Phase Transformers

1. The Customer shall purchase or construct a concrete transformer pad per current IFP specifications in the location indicated on the marked-up plot plan. A minimum ten foot (10') clear area is required in front of the transformer pad and a minimum of two foot (2') clearance is required on the other three (3) sides of the pad. The final transformer location will be determined by IFP. If the Customer chooses to pour their own pad, IFP must be contacted for inspection of transformer form prior to the pad being poured. Pad design shall conform to Attached Figures this Policy. The pad location shall be compacted to a minimum of ninety-five percent (95%) of maximum density prior to concrete placement. The pad shall be level and aligned accordingly. A transformer will not be installed on the pad until it has cured a minimum of seven (7) days. No more than eight (8) conduits on the secondary side of a transformer shall be installed. When the temperature is forty (40º) degrees or lower the pad shall be covered with an insulated tarp. Transformer ground sleeves and ground rods shall be provided by IFP, but shall be picked up at the IFP warehouse and installed by the Contractor in conformance with Attached Figures of this Policy.

    a) When more than eight conduits are required for the secondary service, coordinate with IFP for the installation of a secondary cabinet to be located adjacent to the transformer. This secondary cabinet will also be used for the CT metering equipment in many applications.

C. Sectionalizing Cabinets, Ground Sleeves, Secondary Pedestals, and Fiber Boxes

1. Primary sectionalizing cabinet, ground sleeves, ground rods, secondary pedestals, and fiber boxes shall be provided by IFP, but shall be picked up at the IFP warehouse and/or IFP designated facility and installed by the Contractor in conformance with Attached Figures of this Policy. The top of the sectionalizing ground sleeve shall be installed a minimum of six inches (6”) above final grade. A minimum ten foot (10’) clear area is required in front of the primary voltage switch cabinet and a minimum of two foot (2)’ clearance is required on the other three (3) sides. The location of the ground sleeves, ground rods, and secondary pedestals will be determined by IFP.

D. Modifying Exterior Appearance of Equipment

1. Painting of IFP padmounted equipment shall not be allowed. Wrapping will be allowed with preapproval only. Conditions include; all of standard warning placards and transformer data to be included in the wrap, the wrap cannot cover the fins due to cooling requirements, and no commercial advertising.

V. GENERAL METERING REQUIREMENTS

These general metering requirements cover only the common meter installations. Infrequent or special applications which usually require the approval of IFP, are not included in these metering requirements. Wiring diagrams and other meter information

may be obtained from the IFP Metering Department. All meters installed by IFP are owned by IFP and all maintenance of the meters shall be completed by IFP.

A. Location of Meters

1. Protection from ice, snow, rain or other damage shall be provided by the Customer for metering equipment, when location so demands. A meter shall not be located where it will be subjected to shock, vibration, or other damage. The Customer shall be responsible for the cost of repair for damage to the metering equipment due to lack of protection.

2. Meters shall be installed on the exterior of the structure and at a location which will be readily accessible at all times for reading, inspecting and testing. The meter shall not be contained inside a cabinet or utility closet.

3. Residential meters shall be front yard accessible unless prior approval for another location from IFP is obtained.

4. Meters shall be installed only in sockets which are plumb in all directions and securely fastened to the structure.

5. The centerline of the meter should be five foot, six inches (5’6”) above the finished grade or walkway. If structural details prevent this, the center line height shall be not less than four feet (4’) or more than six feet (6’) in height. See Attached Figures of this Policy.

6. In multiple meter installations such as apartment buildings or shopping centers, meters may be mounted in horizontal rows. The maximum allowable height from ground or walkway to the center line of the meter shall be six foot, six inches (6’6”). The minimum allowable height shall be two feet (2’).

7. In apartment or multiple-use buildings, meters shall not be installed above the first-story level or in the basement.

8. Sufficient access and working space shall be provided around all metering equipment to permit ready and safe operation, maintenance and testing of such equipment, with a minimum of three feet (3’) front working space, minimum of 6 feet, 6 inches (6’6”) head room and a minimum of three feet (3’) wide plus permitting 180° degree opening of equipment doors or hinged panels.

9. Meters shall NOT be mounted on IFP owned poles or pad mount transformers.

10. If a service has been disconnected for any reason, IFP reserves the right to require an inspection prior to energizing.

B. Meter/Point of Service Disconnect

1. External main disconnect(s) shall be required on all Residential points of service.

   a) Provides point of disconnect for Customer side work up to and including the

main panel.

b) Provides an accessible fire department point of disconnect in the event of a structure fire.

c) Provides an accessible location of IFP to drop the load when working on the meter.

d) External main disconnect will not be required if there is a dedicated transformer for the load and if the transformer has a disconnect switch inside of it.

2. IFP strongly recommends an external main disconnect on Commercial points of service.

C. Determining Self-Contained or CT Metering

1. If a Customer is CT metered, the metering shall be only for one (1) building under residential or commercial rate.

2. The City will require CT meters for all single-phase services greater than four hundred (400) amps and <u>all three-phase services of greater than two hundred (200) amps</u>.

D. Residential Metering Requirements

1. All single-phase Customers with a main switch ampacity between two hundred one (201) and four hundred (400) amperes will be metered with a self-contained meter three hundred twenty (320) amp meter base. See Section V.E. of this Policy for meter base requirements.

E. Commercial Metering Requirements

1. All meters, self-contained meters, voltage and current leads, used with instrument transformers, shall be furnished and installed by IFP meter department personnel. CTs shall be furnished by IFP. Installation of CTs shall be coordinated with IFP meter department personnel.

2. All three-phase Customers with a main switch ampacity up to and including two hundred (200) amperes will be metered with a self-contained meter. All loads in excess of two hundred (200) amperes will be CT metered.

3. All meters or instrument transformers must be ahead of the Customer's disconnecting switch. Where multiple meter installations are required and a main switch is used, meters may be installed behind the main switch and ahead of the Customer's disconnect. No unmetered circuits will be connected to the main switch. Entrance wiring must be so arranged that metered circuits do not enter conduits, raceways or enclosures containing unmetered circuits.

4. CT installations shall not be more than fifty feet (50') from the meter base.

Contractor shall install minimum one inch (1”) conduit for metering conductors only. Underground metering conduit shall be buried twenty-four inches (24”) in depth. Schedule 40 PVC with RGS above ground into meter base. CTs must be contained within a CT can or approved switchgear. A CT shall not be placed in transformers. If no building wall is available for mounting, see Free Standing CT Meter in Attached Figures of this Policy.

5. Enclosures for CTs shall be furnished and installed by the Customer (unless otherwise noted). Line and load connections shall be clearly labeled along with labeling all phases. All enclosures shall be at least eleven inches (11”) deep and of such size as to permit ready installation of current transformers on the size of conductor used. The table of enclosures for CTs, will be used as a guide for the minimum nominal size of metal cabinet to be used. All enclosures and meter bases shall have provisions for installing security seals and shall be installed at an accessible location on outside of building. IFP will not allow any Customer equipment to be installed on, or holes drilled in the transformer. Enclosures for CTs will be used on both underground and overhead instrument metered installations. The top of CT enclosure shall not exceed six feet (6’) above finished grade. The bottom of CT enclosure shall not be less than two feet (2’) above finished grade. Any variances to these requirements shall be determined by IFP.

   a) For services greater than 801 amps, the CT metering will be installed in an IFP approved padmounted CT cabinet located adjacent to the transformer (Contractor may use wall mounted CT enclosure for service ampacities of greater than 801 amps if the CT enclosure is rated for and meets minimum UL ratings). Contractor to provide CT cabinet (See Attached Figure 16 of this Policy). CT cabinet to be split bus per American Midwest Power Service Connection Cabinet or approved equal. Coordinate with IFP for required footprint and termination detail. Ground sleeve and ground rod shall be provided by Contractor and installed in conformance with Attached Figures of this Policy. The ground sleeve location shall be compacted to a minimum of ninety-five percent (95%) of maximum density prior to placement. The top of the CT ground sleeve shall be installed a minimum of six inches (6”) above final grade. A concrete pad can be utilized instead of a ground sleeve but must have an 18”-24” deep basement for the conduits. Concrete pad must meet CT cabinet manufacturer standards for strength of the fully loaded CT cabinet and be a minimum of six inches (6”) above finished grade. A minimum three foot (3’) clear area is required in front of the CT cabinet and a minimum of two foot (2’) clearance is required on the other three (3) sides of the CT cabinet. The CT cabinet location will be determined by IFP. Conductor will be provided and installed by IFP from Transformer to padmounted CT Cabinet on services greater than 801 amps. 4” conduit from Transformer to CT cabinet can have 24” radius elbows. CT Cabinet will be owned and

maintained by Developer / Owner. CT Cabinet to be secured by an IFP-owned padlock.

1) CT Cabinet must meet minimum specifications given from American Midwest Power drawing "Service Connection Cabinet 'SCC' with CT provision" as follows or approved equal:

    a. Cabinet is free standing NEMA 3R. Frame is 12 gauge steel galvanized steel bolted together and include leveling provisions. All side plates re pan formed galvanized steel and are bolted to the frame with tamper-resistant zinc plated bolts. Enclosure is primed and painted transformer green enamel.

    b. Supporting structure for bus bars is bolted to framework such as that any phase bar can be relocated vertically as required to meet job requirements.

    c. Bus Bars are electrical grade plated aluminum #6101T65 per ASTM specifications # B317 supported on 17" centers using double plastic insulators Copper bus available on special order. Current density is 750A/square inch maximum for Aluminum bus and 1000A/square inch maximum for Copper bus. Each bus bar is punched with 16 sets of 9/16" square holes on 2" horizontally and 1 ¾" centers vertically.

    d. Ratings are 2000A, 2500A, 3000A, 3600A, and 4000A at 600V maximum 3Ø-4W, 3Ø-3W, 1Ø-3W. All cabinets shall have bus braced for 85,000A RMS amperes short circuit current rating.

    e. Connectors in a range of #2 to 750 MCM are available in set screw type or compression type for field or factory installation. Connectors will be factory installed on right side of bus unless otherwise specified. Up to (12) – 750 MCM or (24) – 250MCM conductors can be installed on each side, per bar.

    f. Adjustable Throats painted transformer green are available to connect to CT cabinet to the Power Company's transformer. The standard dimensions are 12H" x 12W" adjustable in length from 12" to 23". Other sizes are available on special orders.

    g. Meets Standards – ETL listed and labeled conforms to U.L. standard 1773 termination boxes. Conforms to NEMA

standards. Meets National Electrical Code requirements. Meets Power Company requirements.

6. CT meter bases located within six feet (6') of the pad mount transformer shall be grounded and bonded to transformer to prevent touch potential.

ENCLOSURE FOR CURRENT TRANSFORMERS (CTs)

Service Entrance Conductor Ampacity	Minimum CT Cabinet Size (W x H x D)
401 & Above - 10	36" x 48" x 11" (hinged door type) or smaller cabinet as approved by IFP
400 & Below - 30	36" x 48" x 11" (hinged door type)
401 - 800	36" x 48" x 11" (hinged door type)
Over 801	To be coordinated and approved by IFP

F. Meter Bases

These meter base specifications cover all self-contained meter bases and transformer-rated meter bases.

1. The Customer or Contractor shall furnish meter bases and enclosures for all meter installations. All meter bases and enclosures will be installed by the Contractor and incorporated into the Customer's wiring.

2. Meter bases must be listed and installed to meet the National Electric Code and the National Electric Safety Code. Combination socket and disconnecting devices are approved for use, provided the base meets all other specifications and is wired on the line-side of the Customer's disconnecting device. Corrosion inhibitor shall be used on all connections to aluminum conductors.

3. All self-contained commercial service installations shall have factory installed lever or link bypass.

   a) IFP will allow exceptions to the bypass requirements for services with minimal and interruptible load. Services for commercial sprinkler systems controls is an example.

4. IFP will not provide new three-phase, three-wire self-contained service without a grounded neutral system.

5. Single-Phase Meter Bases

a) Single-phase 320 amp residential meter base shall have factory installed lever or link bypass. Single-phase meter bases over four hundred (400) ampere shall be CT instrument metered using six (6) point socket type meter base with drilled and tapped mounting plate for test switch provisions.

b) All 120/208V self-contained single-phase meter base installations shall be of a five (5) terminal socket-type meter base and installed such that the fifth terminal is in the 9 o'clock position.

6. Three-Phase Meter Bases

a) Two hundred (200) ampere and below self-contained meter base installations on three-phase service shall be a seven (7) point terminal socket type meter base.

b) Three-phase meter bases greater than two hundred (200) ampere's shall have a CT instrument metered installation using a thirteen (13) terminal socket-type meter base with a drilled and tapped mounting plate for connection of test switch equipment.

G. Removal of Meters

1. Only authorized IFP personnel shall be allowed to remove meters from meter bases on the Customer's premises.

H. Meter Identification

1. Prior to the meter installation, IFP must be provided with a plan or diagram indicating which meter socket serves which unit. All meter sockets must be marked with the applicable unit address by some permanent means (i.e., not hand written with a "Sharpie") at a location on or near meter base.

I. Master Metering

1. IFP's retail rates are intended for application to individual customers or units of service. Master metering is prohibited. Except as specifically excepted hereinafter. Master metered mobile home parks, multi-occupant residential buildings, commercial buildings and shopping centers connected prior to July 1, 2010, may continue to receive master metered service.

2. Mobile Home Parks built before July 1, 2010, whose space for tenants have been sub-metered by the park Owners, need not be individually metered by IFP. Mobile home park tenants will be charged the same rate for electric service, as though they were directly metered and billed by IFP.

3. Multi-occupant residential buildings, commercial buildings and shopping centers may be master metered if the electric heating, ventilation, air conditioning or water heating systems are centrally located and cannot be controlled by the individual tenants.

4. A Master-Metered Customer may install sub-metering for individual spaces at the Customer's own expense. Any master metering system must be maintained by the building owner and installed by licensed electricians. Master metered Customers may also utilize a reasonable allocation procedure to determine a tenant's usage for the purpose of reimbursing the master metered customer. Such a procedure shall constitute an allocation and not a resale. Such terms must comply with City Code 8-5-9. The Customer shall indemnify IFP for any and all liabilities, actions or claims for injury, loss or damage to persons or property arising from the allocation of service by the customer.

5. IFP will not sell or otherwise provide meters or associated equipment required for sub-metering, nor test and maintain customer owned meters.

VI. SECURITY LIGHTING

A. Program Requirements

1. IFP can provide security lighting for private property for a fixed monthly charge.

2. The Customer will pay a fixed monthly charge for each luminaire, based upon the type of luminaire and wattage. The rates are published in the City Fee Resolution.

3. Security lights can only be affixed to IFP owned poles with the cost of installation paid by the Customer.

4. The City retains ownership of all facilities and equipment.

5. For more information contact IFP Energy Services at (208) 612-8430.

VII. CUSTOMER GENERATION

A. Generation Facility Design and Installation Requirements

1. All new electric generation equipment that a Customer desires to connect to the IFP distribution system shall be approved by IFP prior to connecting the generation equipment to the IFP distribution system.

2. Customer's operating such generation equipment are required to file a Customer Interconnection Agreement Application and adhere to the following conditions:

B. Generation Facility Design Specifications:

1. Facility Description

   a) The Generation Facility shall be designed, constructed and operated in a manner such that it will interconnect and operate in parallel with IFP's electric supply system, in a safe and efficient manner without disruption, impairment, damage or loss of operational efficiency to IFP's electric supply system.

   b) The operation of the Generation Facility is intended to offset a Customer-Generator's electric energy purchases from Idaho Falls Power.

c) The Customer-Generator shall be responsible for the design, installation and operation of the generation system and shall obtain and maintain all required permits and approvals.

d) Any modifications to the system (aside from routine maintenance), including installation of additional generation equipment, replacement panels, or added parts shall only be made following the prior written approval of IFP.

2. Facility Fuel Type and Size Limitations

a) The customer's Generation Facility shall have a maximum annual generating capacity of no more than the previous twelve (12) months of electric usage. Facilities found to be in excess of approved size will not be compensated for net-monthly surplus energy sent to IFP.

3. Generation Facility Installation Standards and Code Compliance:

a) Customer-Generator shall provide the electrical interconnection on the Customer-Generator side of the meter between the Generation Facility and IFP's system.

b) IFP shall make reasonable modifications to their system necessary to accommodate the generation system, with all IFP system modifications being paid for by the Customer. The cost for such modifications will be estimated by IFP, with Customer payment due in advance of installation.

c) The Generation Facility shall include all equipment necessary to meet applicable safety, power quality, and interconnection requirements. These requirements are, or may include,

(1) IFP's policies
(2) National Electrical Code
(3) National Electrical Safety Code
(4) Institute of Electrical and Electronic Engineers (e.g., IEEE 1547),
(5) Nationally Recognized Testing Laboratories (e.g., UL 1741)
(6) California Rule 21
(7) Hawaii Rule 14H
(8) Utility best practices.

d) IFP Engineering staff must approve each design drawing prior to construction of the Generation Facility. The drawings must comport to generally accepted engineering design practices and be submitted with the application. This review will be completed within thirty (30) days of application.

e) Upon completion of construction, the City Electrical Inspector shall give final inspection and approval for the Generation Facility to commence operation.

f) The Customer-Generator shall attend an orientation session with Idaho Falls Power staff. Call (208) 612-8456 for more information.

g) The Customer-Generator shall then file an application for Net-Metering and Small Generation Interconnection Agreement Application with, and receive approval from, IFP before installing an interconnected Generation Facility on Customer-Generator property. Application forms are available at the City of Idaho Falls Building Department. The completed application and Generation Facility system design drawing should be returned to the address listed on the application. The City of Idaho Falls Building Department will also require a building permit and electrical permit along with an additional copy of the system design for review. Review by the City of Idaho Falls Building Department and IFP will occur simultaneously. IFP may withhold approval, if for any reason the requested interconnection would result in a negative monetary or physical impact on IFP's electrical system.

4. Disconnection Device:

a) Customer-Generator shall furnish and install (on Customer-Generator side of the meter) a disconnecting device capable of fully disconnecting and isolating the facility from IFP's distribution system.

(1) The disconnecting device shall be located adjacent to IFP's bi-directional metering equipment and shall be of the visible break type, located in a metal enclosure that can be secured by an IFP-owned padlock or other security device.
(2) The disconnecting device shall be accessible to IFP's personnel at all times and shall conform to National Electric Code standards.
(3) IFP shall have the right to disconnect, with or without notice, the Generation Facility from IFP's distribution system in order to maintain safe and reliable electrical operating conditions or to protect IFP's system from damage, disruption, interference, or to preserve system reliability.
(4) The Generation Facility shall remain disconnected until such time that IFP determines conditions justifying the disconnection have been resolved.

5. Generation Facility Operational Standards:

a) Customer-Generator shall furnish, install, operate and maintain in good order and repair, without cost to IFP, all equipment required for the safe operation of the Generation Facility operating in parallel with the IFP's electrical supply system. This shall include, but is not limited to, equipment necessary to

(1) Establish and maintain automatic synchronism with IFP's distribution system,
(2) Automatically disconnect the Generation Facility from IFP's distribution system in the event of system overload or outage and
(3) For Solar Facilities with backup battery storage, the system must

automatically disconnect from and not back feed onto, IFP's distribution system in the event of a system overload or power disruption.

(4) The Customer-Generator's Generation Facility shall not cause any adverse effects upon the quality or reliability of service provided to IFP's other customers.

(5) IFP reserves the right to require that the Generation Facility modifications to comport with Idaho Falls electrical system change in needs or requirements or to negate any adverse impact the interconnected Facility has on other customers.

(6) The Generation Facility shall not cause any adverse effects upon the quality or reliability of service provided to IFP's other customers.

(7) The Customer-Generator shall operate the Generation Facility in accordance with applicable rules and regulations.

b) On an approximate three-year rotation, the Customer is required to confirm the status of the generation facility. In addition, IFP reserves the right to inspect the facility at any time for non-backfeed protection for utility safety requirements.

(1) IFP reserves the right to disconnect the generation facility, or if required the full service if the customer fails to confirm the status of the generation facility or allow for safety inspections.

6. Generation Facility Maintenance:

a) Except for bi-directional metering equipment owned and maintained by IFP, all equipment on the Customer-Generator's side of the meter, including the required disconnecting switch, shall be provided and maintained in satisfactory operating condition by the Customer-Generator at the Customer's expense and shall remain the property and responsibility of the Customer-Generator. IFP shall bear no liability for Customer-Generator's equipment or for the consequences of its operation.

C. Generation Facility Net-Metering and Power Purchases

1. Measurement of Net Energy:

a) Metering equipment shall be installed by IFP (solely at Customer-Generator's expense) to measure the flow of electrical energy to and from the customer premise.

2. Purchase of Energy:

a) The Customer-Generator agrees to sell, and IFP agrees to issue a credit for, all electrical energy generated at the Generation Facility in excess of the Customer-Generator's on-site load in accordance with the current City fee resolution.

b) WHERE CONSUMPTION EXCEEDS GENERATION:

(1) If electricity supplied by Idaho Falls Power during the billing period exceeds the electricity generated by the Customer-Generator during the billing period, the Customer-Generator:

(a) Shall be billed for the applicable non-energy charges for the billing period under the Customer's appropriate retail rate classification;
(b) Shall be billed for the net electricity supplied by IFP at the Customer's appropriate rate adopted in ordinance for the corresponding period.

c) WHERE GENERATION EXCEEDS CONSUMPTION:

(1) If the electricity generated by the Customer-Generator exceeds the electricity supplied by IFP during the billing period the Customer-Generator:

(a) Shall be billed for the applicable non-energy charges for the billing period under the Customer's appropriate rate classification;
(b) Shall be financially credited for excess energy delivered to Idaho Falls Power during the billing period, at the rate adopted in ordinance for the corresponding period.

3. Renewable Energy Credits

a) The Customer-Generator will release to IFP all renewable-energy credits (RECs), renewable-energy credits (S-RECs) or other renewable attributes as appropriate based on actual on-site electric generation from the Generation Facility. Credits will be released to IFP for the duration of the interconnection to IFP's power system.

VIII. ELECTRIC VEHICLE CHARGING STATION PROGRAM REQUIREMENTS

A. Electric Vehicle Charging Station Installation

1. The following are Customer requirements for those who choose to participate in an IFP electric vehicle charging station lease:

a) Location

(1) The Customer is responsible for the selection of the charging station location, for both wall mount and pedestal mount charging stations with approval from IFP. Location must be approved by IFP prior to installation. IFP staff is available to assist in selecting suitable locations. To schedule an onsite assessment with an IFP representative, call (208) 612-8430.

b) Installation

(1) The Customer will be responsible to install the pedestal concrete pad base, conduit and wire, or conduit and wire for a wall mount location. See Attached Figures for the specification sheets for the pedestal installation. IFP is solely responsible for the installation of the charging station on the customers premise. If a charging station is to be installed on premises, which is leased, rather than owned, Customer must receive all necessary consent from the premises owner for the installation of the Charging Station by the Customer and allow access for operation and maintenance by IFP.

(2) Customer is responsible for acquiring all applicable permits and inspections for the construction and installation of the Station. In the event that an upgrade in electric service or wiring is required to support the stated load of the Station this will be the sole responsibility of the Customer.

(3) The Customer is responsible for all costs (labor and materials) associated with the installation site preparation: trenching, conduit, cement pedestal base, wire, etc.

c) Maintenance and Repair

(1) Standard Maintenance

(a) IFP will perform standard maintenance to the charging station to ensure it is in proper working condition throughout the term of the program. Maintenance includes cleaning the charging station connector, testing the charging voltage level, testing system functionality, and related minor work, as reasonably determined by IFP, to preserve the unimpaired function of the charging station.

(b) Customer will provide IFP access to the charging station and related equipment for maintenance between the hours of 7:00 a.m. and 7:00 p.m. local time on City business days. In the case of an emergency, Customer will allow IFP access, with notice, to the charging station and related equipment outside of normal maintenance times.

(2) Equipment Damage

(a) Customer is responsible, at its sole cost and expense, for actions related to the repair and replacement of a negligently damaged charging station to include vandalism.

(b) The Customer agrees that the facilities in which the charging station is located will be kept clean and in good repair.

(c) Customer will maintain structural portions of the premises surrounding the Charging Station, including the pavement, foundation, roof structure, walls, columns, beams, parking areas, and all adjoining common areas, in good condition and repair.

(d) If temporary removal of the Charging Station is required in

connection with the repair of the Charging Station or building structure, Customer will provide IFP five (5) business day's prior written notice or a shorter but reasonable period in the event of an emergency.

(e) Customer may interrupt electric service to a Charging Station to ensure safety or when needed to repair or maintain the premises. After completion of the repairs or maintenance, Customer will promptly restore the affected charging station and notify IFP.

(f) IFP will not be responsible for damages caused by operation of the Charging Station, including failure of equipment to operate as intended.

(g) IFP will not be held responsible for any damage to the Customer's property or electrical system due to negligent use of or vandalism to the Charging Station.

(3) Continuity of service

(a) IFP will use reasonable diligence to supply constant electricity service to the charging station but does not guarantee the service against an irregularity or interruption.

(b) IFP may interrupt electric service to a Charging Station when necessary to maintain reliability of the electric distribution system, ensure safety, reduce peak demand, or to perform maintenance on the Charging Station or related equipment.

(c) IFP may install and operate additional meter(s), data monitoring equipment, or charge management devices which gather information regarding equipment usage.

(d) Such installation will be adjacent to or near the Charging Station but will not interfere with parking or pedestrian traffic paths on premises.

(4) Labeling and signage

(a) Charging Stations will be labeled by IFP.

(b) The Lessee will not remove, mar, deface, obscure, or otherwise tamper with the Charging Station labels.

(c) Customer can install signage provided by IFP or others (as approved by IFP) to identify charging station sponsor and provide information about Charging Station care.

(5) Charging Station Locations

(a) Charging Stations will be placed on the customer side of the electric meter.

(b) Power used by the Station will flow through the Customers meter and be billed at their appropriate rate class for the customer type as

established in the current adopted rate resolution.

(c) The energy consumed by the Station(s) will not be metered separately or tracked independently of the Customers other electric usage at the location on the appropriate meter.

IX. SMALL WIRELESS FACILITIES

A. Purpose.

1. To provide design standards for Small Wireless Facilities (SWFs) also known as small cell installations. These standards are intended for 4G and 5G equipment installed on Idaho Falls Power (IFP) infrastructure located in the City of Idaho Falls and located in City-owned or City-controlled rights-of-ways and easements, but are also applicable to similar technologies such as wi-fi networks.

2. The City of Idaho Falls (City) encourages the deployment of small cell wireless technology within the City for the benefit it provides the citizens of Idaho Falls including increased connectivity and reliable networks and services.

3. The City desires to add this infrastructure with minimal negative impact to the character and aesthetics of our community.

4. The City has a fiduciary duty to manage the public right-of-way (ROW) for the health, safety, and welfare of the public.

5. These Design Standards are for siting and criteria for the installation of Wireless Facilities, including SWFs permitted by the City to be installed.

B. Definitions.

Applicable Codes. International building, fire, electrical, plumbing, or mechanical codes adopted by a recognized national code organization; and adopted by the City with local amendments.

City. The City of Idaho Falls, Idaho and its officers and employees.

City Park. An area that is zoned or otherwise designated by the City as a public park for the purpose of recreational activity.

Collocate or collocation. The installation, mounting, maintenance, modification, operation, or replacement of SWF in a City-owned or City-controlled public ROW on or adjacent to a pole.

Concealment, decorated or camouflaged. Any SWF or Pole that is covered, blended, painted, wrapped, disguised, camouflaged or otherwise concealed or decorated such the SWF blends into the surrounding environment and is visually unobtrusive as allowed as a condition for City approval. Camouflage may consist of but not limited to; hidden beneath a façade, blended with surrounding area design, painted to match the supporting area, or disguised with artificial tree branches.

Decorative pole. A pole specially designed and placed for aesthetic purposes.

Design District. An area that is zoned, or otherwise designated by the City and for which the City maintains and enforces unique design and aesthetic standards on a uniform and nondiscriminatory basis.

Downtown District. The portion in the City's downtown area that is identified as having historic or aesthetic preservation or enhancement needs by the Zoning Code.

Easement. Includes any public easement or other compatible use created by dedication, or by other means, to the City for public utility purposes or any other purpose.

Highway ROW. ROW adjacent to a state or federal highway.

Historic District. An area that is zoned or otherwise designated as a historic district under City, state or federal code.

Hydroelectric Project. All hydroelectric facilities and lands within the FERC licensed boundaries of Project 2842 the Idaho Falls Project and Project 2952 the Gem State Project.

Local. Within the geographical boundaries of the City.

Location City approved and lawfully permitted location for the SWF.

Macro tower. A guyed or self-supported pole or monopole greater in height than standard street light poles or traffic signal masts.

Small Wireless Facility (SWF). As defined by City Zoning Code-

Network Provider or Provider. A wireless service provider or a person that does not provide wireless services and that is not an electric utility but builds or installs on behalf of a wireless service provider. a SWF

License. A written authorization for the use of the public ROW or collocation on a service pole required from the City before a network provider may perform an action or initiate, continue, or complete a project over which the City has police power.

Pole. A service pole, municipally owned utility pole, or SWF Support Pole. Poles that have conductor energized at 44kV or higher are excluded from this definition.

Private easement. An easement or other real property right that is only for the benefit of the grantor and grantee and their successors and assigns.

Public Right-of-Way or Rights of Way (ROW). The area on, below, or above a public roadway, highway, street, public sidewalk, alley, waterway, or utility easement in which the City has an ownership interest or controls through contractual means. The term does not include a private easement or the airwaves above a public ROW, with regard to wireless telecommunications.

Service pole. A pole, other than a municipally owned utility pole, owned or operated by the City and located in a public ROW, including: a pole that supports traffic control functions, a structure for signage, a pole that supports lighting (other than a decorative pole); and a pole or similar structure owned or operated by the City and supporting only SWF

Traffic Signal. Any device, whether manually, electrically, or mechanically operated by which traffic is alternately directed to stop and proceed.

Wireless service. Any service, using licensed or unlicensed wireless spectrum, including the use of Wi-Fi, whether at a fixed location or mobile, provided to the public using a SWF

Wireless service provider. A person or company that provides wireless service to the public.

C. Locations of Wireless Facilities and Related Ground Equipment.

1. Most Preferable Locations

   a) Public Right-of-Way

   b) Industrial Areas

   c) Retail and Commercial areas

2. Less Preferable Locations

   a) Historic, Design, and Downtown Districts

      Any area designated by the City as a Historic, Design, or Downtown District will be subject to aesthetic requirements such as Camouflage at the nondiscriminatory discretion of the City.

   b) Municipal Parks

      ROW located in or adjacent to a street or thoroughfare that is adjacent to a municipal park or undeveloped land that is designated for a future park by zoning

3. Prohibited or Restricted Areas for Certain Wireless facilities, except with Separate City Agreement or Subject or Concealment Conditions.

   a) Residential Areas

      ROW that is adjacent to lots or undeveloped land that is designated for residential use by zoning.

      If a SWF is installed in a residential area it shall not be placed in public-utility-easement located outside of the platted ROW.

4. Historic, Design, and Downtown Districts.

   a) As a condition for approval of SWF in Historic, Design and Downtown Districts, the City shall require reasonable design decoration, Camouflage, or Concealment measures for the SWF. The City requests that a Network Provider explore the feasibility of using concealment, decoration, wrapping, or Camouflage measures to improve the aesthetics of the SWF, or related ground equipment, or any portion of the nodes, poles, or equipment, to minimize visual impacts.

b) Network Provider shall comply with and observe all applicable City, State, and Federal historic preservation laws and requirements.

c) Each license application shall disclose if it is within a District with Decorative Poles or in an area of the City zoned or otherwise designated as a Historic, Design or Downtown District.

5. Historic Landmarks

a) A Network Provider is discouraged from installing a SWF within 300 feet of a historic site or structure or Historic Landmark recognized by the City, state or federal government. It is advised that each license application disclose if it is within 300 feet of such a structure.

6. Undergrounding Requirements

a) A Network Provider shall comply with nondiscriminatory undergrounding requirements, including City ordinances, zoning regulations, state law, private deed restrictions, and other public or private restrictions, that prohibit installing aboveground structures in a ROW without first obtaining zoning or land use approval.

b) Areas may be designated from time to time by the City as Underground Requirement Areas in accordance with filed plats and or conversions of overhead to underground areas, as may be allowed by law.

c) Each license application shall disclose if it is within an area that has undergrounding requirements.

7. Exceptions

The City at its sole, undiscriminatory, discretion may grant exception to the above prohibited locations and sizes.

D. Order of Preference regarding SWF attachment to existing facilities and SWF Support Poles.

1. The preference is for all electronics except the antennae to be located in a ground mounted cabinet located behind existing walkways.

2. Existing non-decorative street light poles

3. Traffic signal structures when such installation will not interfere with the integrity of the SWF and will not interfere with the safety of the public.

4. New SWF poles located in non-residential areas at signalized intersections.

5. Ground Equipment should be minimal and the least intrusive alternative.

E. Guidelines on Placement

1. Generally Network Provider shall construct and maintain SWF and SWF Support

Poles in a Manner that does not:

a) Obstruct, impede, or hinder the usual travel or public safety on a public ROW;

b) Obstruct the legal use of a public ROW by other utility providers;

c) Violate nondiscriminatory applicable codes;

d) Violate or conflict with the City's publicly disclosed public ROW management policies or zoning ordinances;

e) Violate the ADA; or.

f) Violate City noise or nuisance standards

2. Licensing.

   a) As defined in City Code, Idaho Falls Service Policy, City Design Criteria, and a Master License Agreement with each Network Provider or carrier.

   b) All new equipment placed in the ROW shall require a ROW permit. This permit will ensure review of traffic and pedestrian safety and to review potential impacts from planned construction projects.

3. SWF facilities placement.

   a) ROW. SWFs with related ground equipment shall be placed, as much as possible within two (2') feet at the outer edge of the ROW line to minimize any obstruction, impediment to the usual travel or public safety on a ROW.

   b) Height above ground: SWF attachments to a pole shall be installed at least eight (8) feet above the ground, and if a SWF attachment is projecting toward the street, the attachment shall be installed no less than sixteen (16) feet above the ground.

   c) SWF Spacing: SWFs shall be no closer to another SWF than a minimum of three hundred (300') feet, unless by Conditional Use Permit.

   d) Installations on Traffic Signals: Installation on traffic signal structures must:

      (1) Be encased in a separate conduit than the traffic light electronics,
      (2) Have a separate electric power connection than the structure,
      (3) Have a separate access point than the structure, and
      (4) Be clear of any current or potential attachment of traffic control devices (signal and signs) and ancillary devices (detection, preemption, surveillance, etc.) and not constitute a violation of the Manual on Uniform Traffic Control Devices (MUTCD).
      (5) SWFs will not be allow on any sign post located in the ROW.

4. New SWF Support Poles.

   a) All new poles must be selected from the current Idaho Falls Power list of acceptable poles by Valmont or approved equivalent.

Service Policy Figure Index:

1. 3 PHASE TRANSFORMER PAD
2. 3 PHASE TRANSFORMER PAD (SMALL)
3. 3 PHASE TRANSFORMER PAD (LARGE)
4. SINGLE PHASE TRANSFORMER BASE (GROUND SLEEVE)
5. 3 PHASE SECTIONALIZING CABINET BASE (GROUND SLEEVE)
6. SINGLE PHASE SECTIONALIZING CABINET BASE (GROUND SLEEVE)
7. SECONDARY SERVICE PEDESTAL BASE (GROUND SLEEVE)
8. TYPICAL BELL END INSTALLATION DIAGRAM
9. JOINT UTILITY TRENCH
10. LIGHT POLE FOUNDATION DETAIL
11. TYPICAL RESIDENTIAL UNDERGROUND SERVICE
12. TYPICAL RESIDENTIAL OVERHEAD SERVICE
13. ELECTRICAL SERVICE REQUIREMENTS
14. FREE STANDING METER PANEL (POST MOUNTED – 1Ø)
15. FREE STANDING CT METER (POST MOUNTED – 1Ø OR 3Ø)
16. CT CABINET WITH GROUND SLEEVE (801 – 4000 AMPS)
17. RISER DETAIL
18. OVERHEAD CLEARANCES
19. OPERATION AND CUSTOMER CLEARANCES
20. APPLICATION GUIDE FOR 2017 NESC TABLE 232-1
21. APPLICATION GUIDE FOR 2017 NESC
22. GROUND CLEARANCES 2017 NESC
23. COMMUNICATION CABLE CLEARANCES
24. BOLLARD DETAIL
25. ELECTRIC VEHICLE PEDESTAL FOUNDATION PAD
26. ELECTRIC VEHICLE CHARGER ASSEMBLY INSTRUCTIONS
27. ELECTRIC VEHICLE CHARGER MOUNTING INSTRUCTIONS
28. WIRELESS ANTENNA STEEL STREET LIGHT (PADMOUNTED EQUIPMENT)
29. WIRELESS ANTENNA (STEEL MONO POLE)
30. 7’ X 12’ VAULT
31. 7’ X 12’ VAULT LID

3 PHASE TRANSFORMER PAD

PLAN VIEW

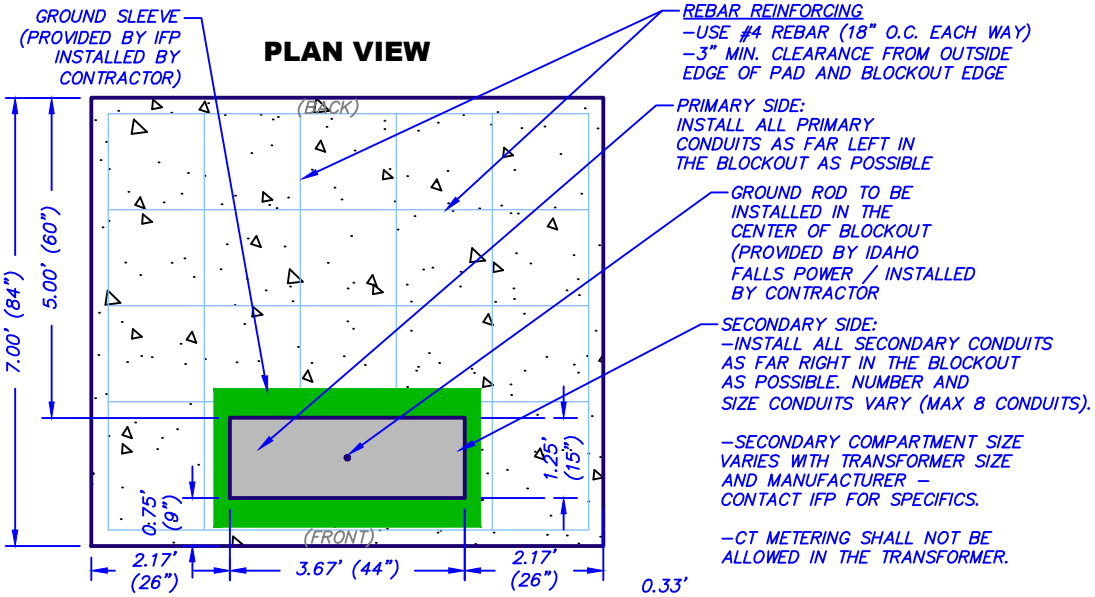

LAYOUT VIEW

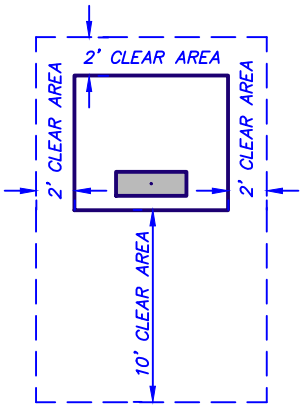

PROFILE VIEW

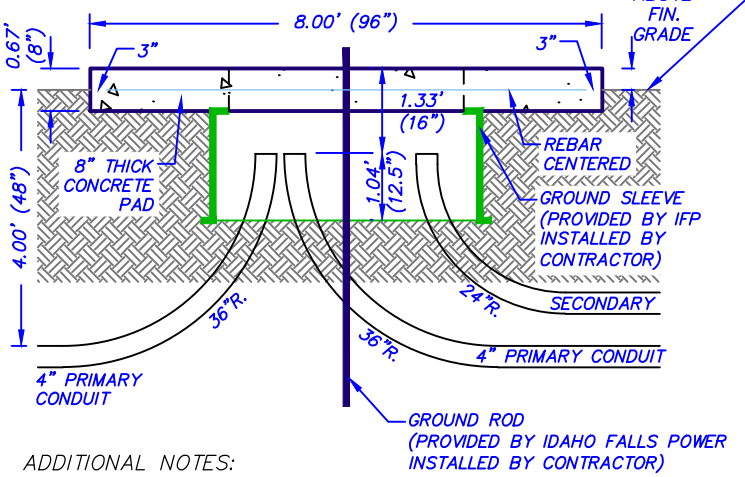

SIDE VIEW

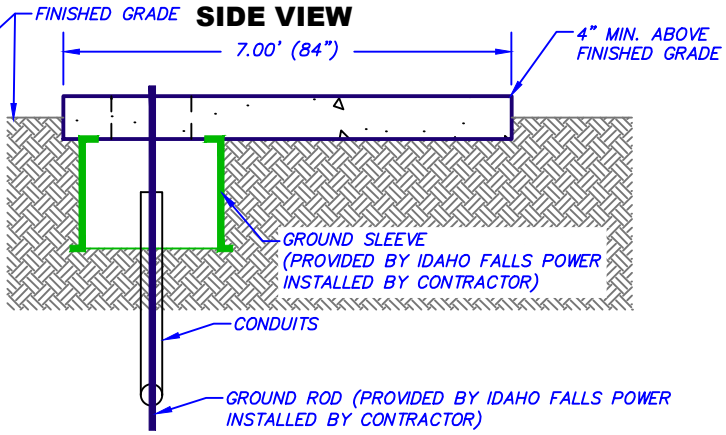

ISOMETRIC VIEW OF GROUND SLEEVE

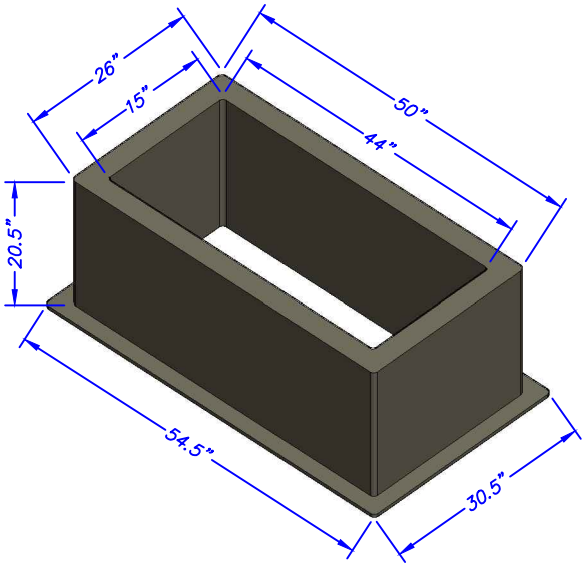

ADDITIONAL NOTES:

1. 8" PRE-CAST CONCRETE PAD IS AN ACCEPTABLE OPTION. SEE EARTHWORK AND OTHER SPECIFICATIONS REQUIREMENTS BELOW AND IN DRAWING. INSPECTION PRIOR TO PLACEMENT IS REQUIRED.
2. INSTALL CONDUITS AS SHOWN IN DETAIL. INSTALL BELL ENDS AND CAP ALL CONDUITS. IDENTIFY ALL CONDUITS FOR ROUTING. CONTRACTOR TO PLACE IFP PROVIDED GROUND SLEEVE AND GROUND ROD AS SHOWN IN DETAIL. CONTACT IFP FOR INSPECTION.
3. TRANSFORMER PAD SHALL HAVE A MINIMUM THICKNESS OF 8" CONCRETE AND SHALL BE DESIGNED WITH SUFFICIENT REINFORCING TO ACCOMMODATE A TRANSFORMER WEIGHT OF 16,000 LBS (SEE DRAWING).
4. THE PAD LOCATION SHALL BE COMPACTED TO A MINIMUM OF 95% OF MAXIMUM DENSITY PRIOR TO PLACEMENT OF CONCRETE.
5. THE TRANSFORMER WILL NOT BE INSTALLED UNTIL THE CONCRETE HAS CURED A MINIMUM OF (7) DAYS. IF THE TEMPERATURE IS EXPECTED TO DROP BELOW 40°, THERMAL BLANKETS MUST BE USED FOR A MINIMUM PERIOD OF 72 HOURS. DO NOT PLACE PAD ON THE FROZEN EARTH.
6. TOP OF THE TRANSFORMER PAD SHALL BE CONSTRUCTED TO A MINIMUM OF 4" ABOVE FINISHED GRADE. POSITIVE DRAINAGE MUST BE PROVIDED AWAY FROM THE TRANSFORMER PAD. CONTACT IFP FOR INSPECTION PRIOR TO PLACEMENT OF CONCRETE.

1" = 3'

IDAHO FALLS POWER

SERVICE POLICY
FIGURE 1
DATE MODIFIED: 12/17/2019

3 PHASE TRANSFORMER PAD (SMALL)

PLAN VIEW

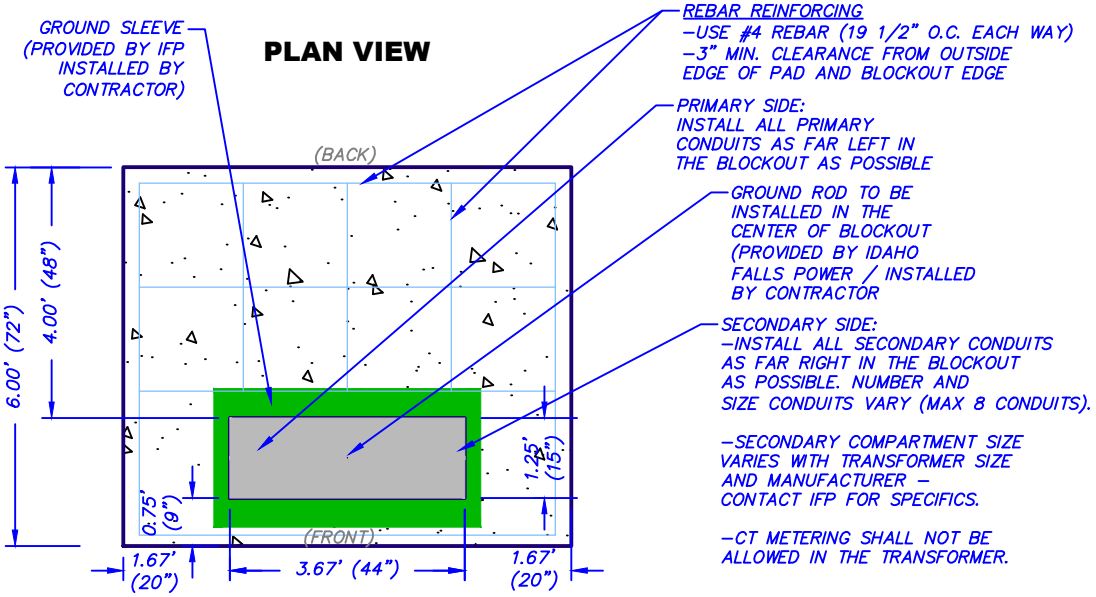

LAYOUT VIEW

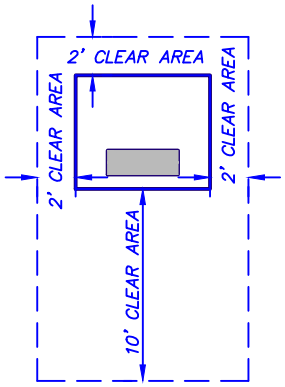

PROFILE VIEW

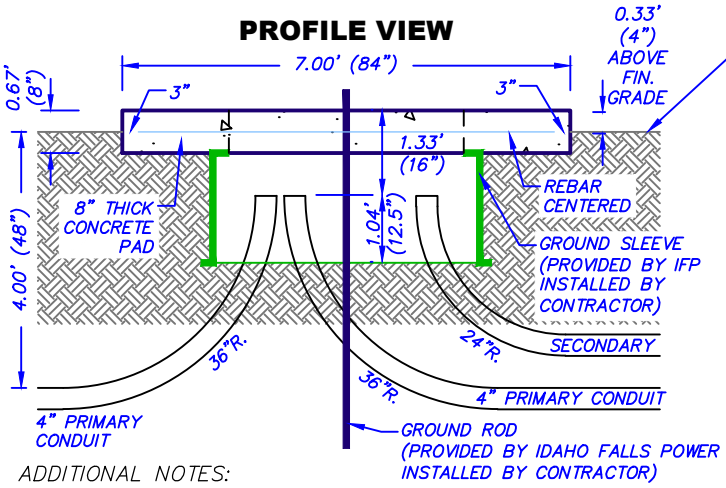

SIDE VIEW

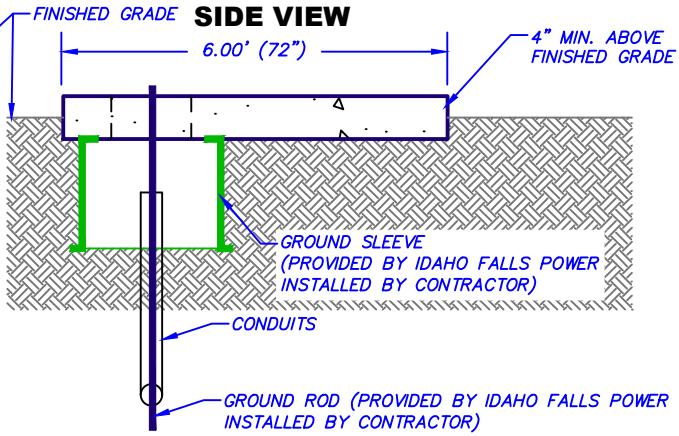

ADDITIONAL NOTES:

1. 8" PRE–CAST CONCRETE PAD IS AN ACCEPTABLE OPTION. SEE EARTHWORK AND OTHER SPECIFICATIONS REQUIREMENTS BELOW AND IN DRAWING. INSPECTION PRIOR TO PLACEMENT IS REQUIRED.
2. INSTALL CONDUITS AS SHOWN IN DETAIL. INSTALL BELL ENDS AND CAP ALL CONDUITS. IDENTIFY ALL CONDUITS FOR ROUTING. CONTRACTOR TO PLACE IFP PROVIDED GROUND SLEEVE AND GROUND ROD AS SHOWN IN DETAIL. CONTACT IFP FOR INSPECTION.
3. TRANSFORMER PAD SHALL HAVE A MINIMUM THICKNESS OF 8" CONCRETE AND SHALL BE DESIGNED WITH SUFFICIENT REINFORCING TO ACCOMMODATE A TRANSFORMER WEIGHT OF 16,000 LBS (SEE DRAWING).
4. THE PAD LOCATION SHALL BE COMPACTED TO A MINIMUM OF 95% OF MAXIMUM DENSITY PRIOR TO PLACEMENT OF CONCRETE.
5. THE TRANSFORMER WILL NOT BE INSTALLED UNTIL THE CONCRETE HAS CURED A MINIMUM OF (7) DAYS. IF THE TEMPERATURE IS EXPECTED TO DROP BELOW 40°, THERMAL BLANKETS MUST BE USED FOR A MINIMUM PERIOD OF 72 HOURS. DO NOT PLACE PAD ON THE FROZEN EARTH.
6. TOP OF THE TRANSFORMER PAD SHALL BE CONSTRUCTED TO A MINIMUM OF 4" ABOVE FINISHED GRADE. POSITIVE DRAINAGE MUST BE PROVIDED AWAY FROM THE TRANSFORMER PAD. CONTACT IFP FOR INSPECTION PRIOR TO PLACEMENT OF CONCRETE.

ISOMETRIC VIEW OF GROUND SLEEVE

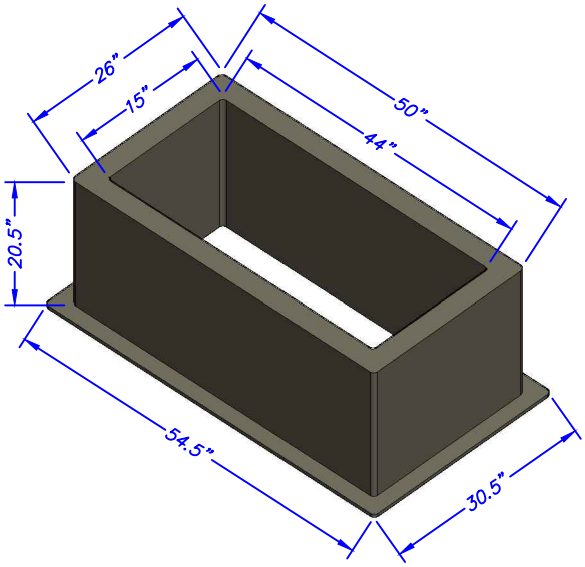

FOR USE ONLY WHEN DIRECTED BY IDAHO FALLS POWER

IDAHO FALLS POWER
SERVICE POLICY
FIGURE 2
DATE MODIFIED: 12/17/2019

1" = 3'

3 PHASE TRANSFORMER PAD (LARGE)

PLAN VIEW

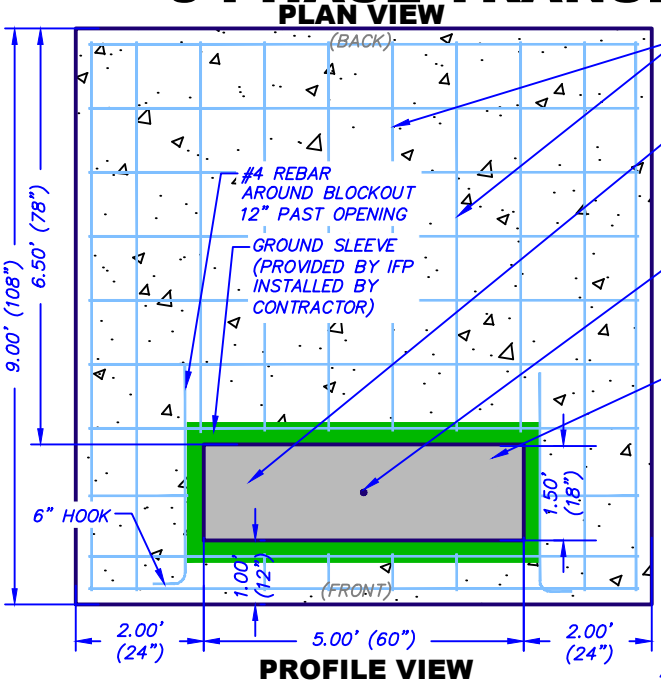

REBAR REINFORCING
–USE #4 REBAR (12" O.C. EACH WAY)
–3" MIN. CLEARANCE FROM OUTSIDE EDGE OF PAD AND BLOCKOUT EDGE

PRIMARY SIDE:
INSTALL ALL PRIMARY CONDUITS AS FAR LEFT IN THE BLOCKOUT AS POSSIBLE

GROUND ROD TO BE INSTALLED IN THE CENTER OF BLOCKOUT (PROVIDED BY IDAHO FALLS POWER / INSTALLED BY CONTRACTOR

SECONDARY SIDE:
–INSTALL ALL SECONDARY CONDUITS AS FAR RIGHT IN THE BLOCKOUT AS POSSIBLE. NUMBER AND SIZE CONDUITS VARY (MAX 8 CONDUITS).

–SECONDARY COMPARTMENT SIZE VARIES WITH TRANSFORMER SIZE AND MANUFACTURER – CONTACT IFP FOR SPECIFICS.

–CT METERING SHALL NOT BE ALLOWED IN THE TRANSFORMER.

LAYOUT VIEW

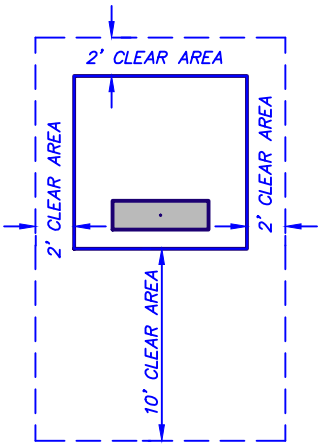

PROFILE VIEW

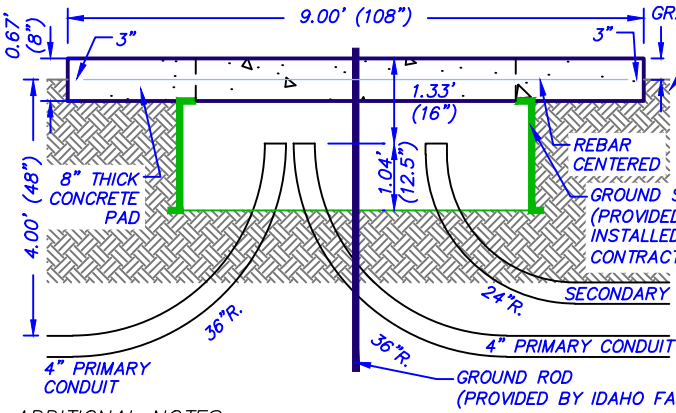

0.33' (4") ABOVE FIN. GRADE

FINISHED GRADE

SIDE VIEW

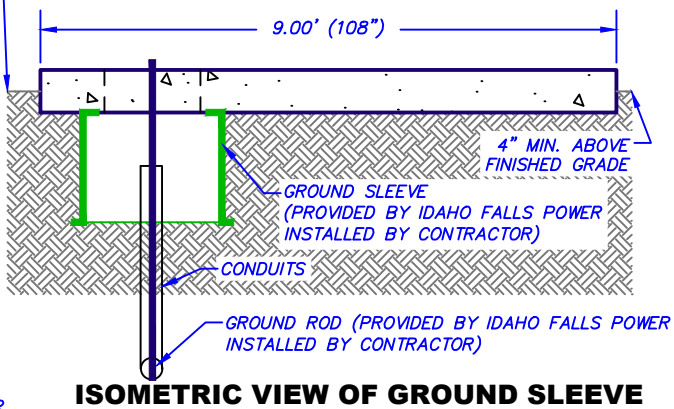

ISOMETRIC VIEW OF GROUND SLEEVE

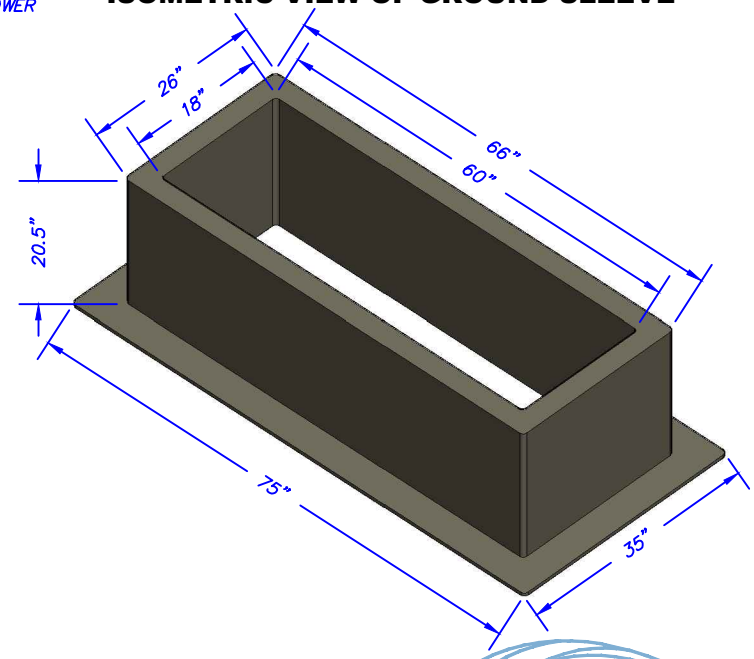

ADDITIONAL NOTES:

1. 8" PRE–CAST CONCRETE PAD IS AN ACCEPTABLE OPTION. SEE EARTHWORK AND OTHER SPECIFICATIONS REQUIREMENTS BELOW AND IN DRAWING. INSPECTION PRIOR TO PLACEMENT IS REQUIRED.
2. INSTALL CONDUITS AS SHOWN IN DETAIL. INSTALL BELL ENDS AND CAP ALL CONDUITS. IDENTIFY ALL CONDUITS FOR ROUTING. CONTRACTOR TO PLACE IFP PROVIDED GROUND SLEEVE AND GROUND ROD AS SHOWN IN DETAIL. CONTACT IFP FOR INSPECTION.
3. TRANSFORMER PAD SHALL HAVE A MINIMUM THICKNESS OF 8" CONCRETE AND SHALL BE DESIGNED WITH SUFFICIENT REINFORCING TO ACCOMMODATE A TRANSFORMER WEIGHT OF 16,000 LBS (SEE DRAWING).
4. THE PAD LOCATION SHALL BE COMPACTED TO A MINIMUM OF 95% OF MAXIMUM DENSITY PRIOR TO PLACEMENT OF CONCRETE.
5. THE TRANSFORMER WILL NOT BE INSTALLED UNTIL THE CONCRETE HAS CURED A MINIMUM OF (7) DAYS. IF THE TEMPERATURE IS EXPECTED TO DROP BELOW 40°, THERMAL BLANKETS MUST BE USED FOR A MINIMUM PERIOD OF 72 HOURS. DO NOT PLACE PAD ON THE FROZEN EARTH.
6. TOP OF THE TRANSFORMER PAD SHALL BE CONSTRUCTED TO A MINIMUM OF 4" ABOVE FINISHED GRADE. POSITIVE DRAINAGE MUST BE PROVIDED AWAY FROM THE TRANSFORMER PAD. CONTACT IFP FOR INSPECTION PRIOR TO PLACEMENT OF CONCRETE.

FOR USE ONLY WHEN DIRECTED BY IDAHO FALLS POWER

1" = 3'

IDAHO FALLS POWER
SERVICE POLICY
FIGURE 3
DATE MODIFIED: 12/17/2019

SINGLE PHASE TRANSFORMER BASE (GROUND SLEEVE)

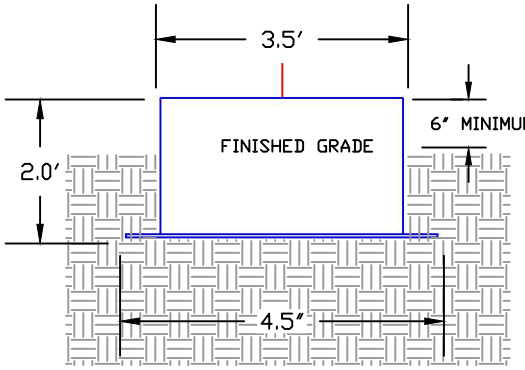

FRONT VIEW

THE DEPTH OF GROUND SLEEVE MAY VARY (SEE NOTE 6)

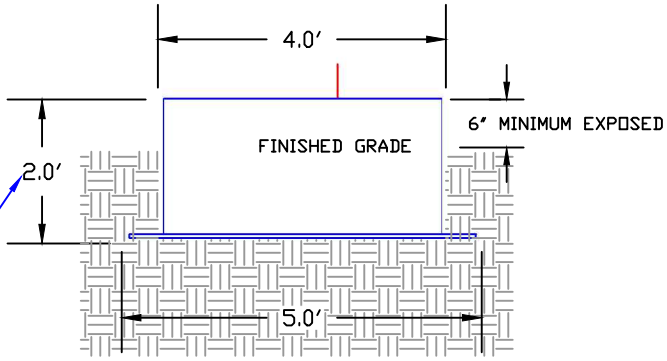

SIDE VIEW

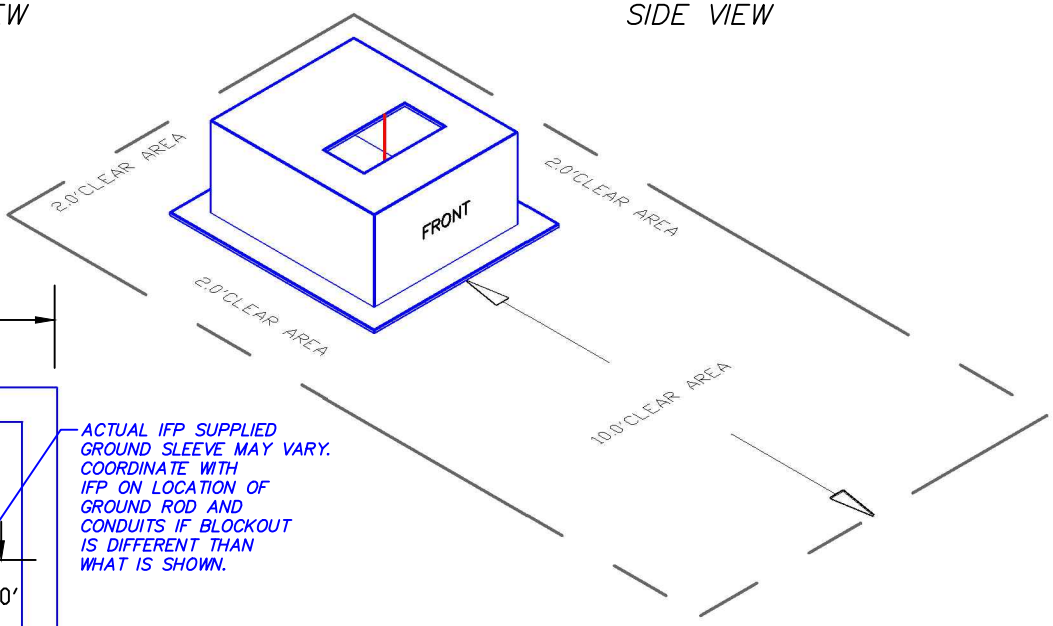

DIMENSIONS MAY VARY (SEE NOTE 6)

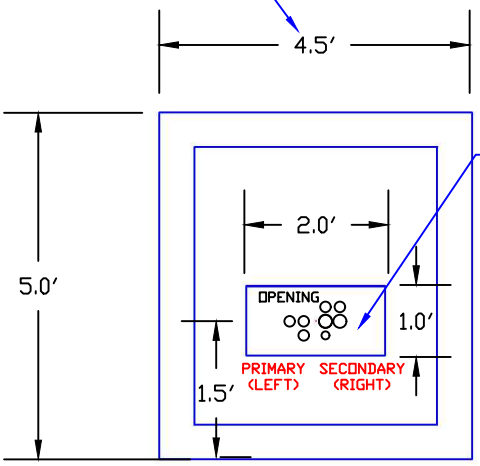

PLAN VIEW

ACTUAL IFP SUPPLIED GROUND SLEEVE MAY VARY. COORDINATE WITH IFP ON LOCATION OF GROUND ROD AND CONDUITS IF BLOCKOUT IS DIFFERENT THAN WHAT IS SHOWN.

GROUND ROD TO BE INSTALLED IN THE CENTER OF THE OPENING (UNLESS OTHERWISE DIRECTED). (PROVIDED BY IDAHO FALLS POWER INSTALLED BY CONTRACTOR).

1. SINGLE PHASE TRANSFORMER BASE (GROUND SLEEVE) SHALL BE PROVIDED BY IDAHO FALLS POWER BUT SHALL BE INSTALLED TO REQUIRED GRADE BY THE CONTRACTOR/DEVELOPER.
2. THE PAD LOCATION SHALL BE COMPACTED TO A MINIMUM OF 95% OF MAXIMUM DENSITY PRIOR TO PLACEMENT.
3. THE TOP OF THE BASE SHALL BE INSTALLED A MINIMUM OF 6" ABOVE FINISHED GRADE. POSITIVE DRAINAGE MUST BE PROVIDED AWAY FROM THE CABINET BASE.
4. ANY DEVIATION IN THE FINAL GRADE OR LOCATION OF THE CABINET BASE MUST BE APPROVED BY IDAHO FALLS POWER.
5. CT METERING WILL NOT BE ALLOWED IN THE TRANSFORMER.
6. ACTUAL DIMENSIONS OF GROUND SLEEVE MAY VARY FROM WHAT IS SHOWN IN DRAWING; VERIFY DIMENSIONS WITH IDAHO FALLS POWER PRIOR TO INSTALLATION.

IDAHO FALLS POWER

SERVICE POLICY
FIGURE 4
DATE MODIFIED: 01/31/2019

3 PHASE SECTIONALIZING CABINET BASE (GROUND SLEEVE)

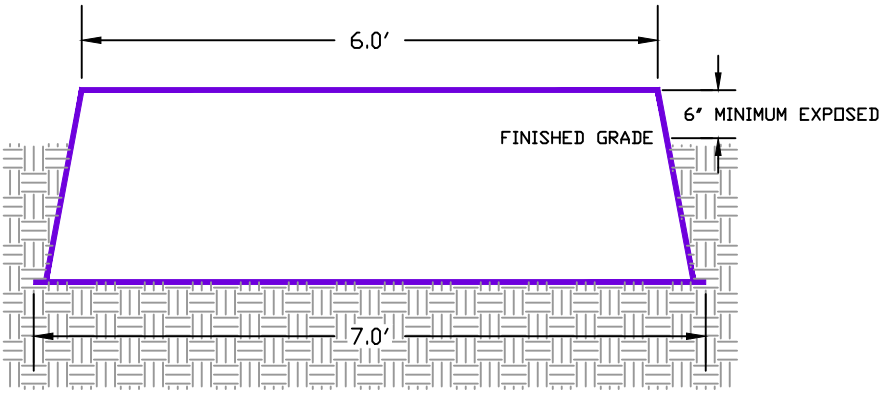

FRONT VIEW

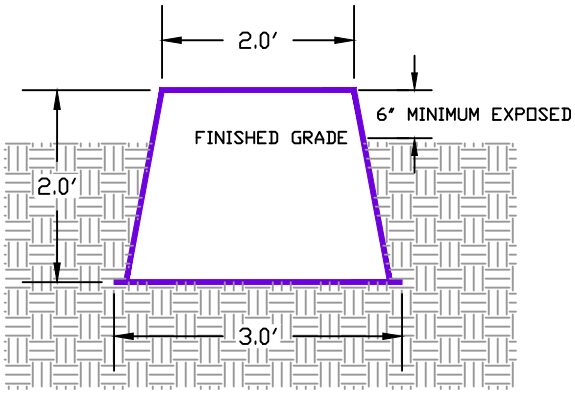

END VIEW

GROUND ROD TO BE INSTALLED IN CENTER OF OPENING.(PROVIDED BY IDAHO FALLS POWER INSTALLED BY CONTRACTOR).

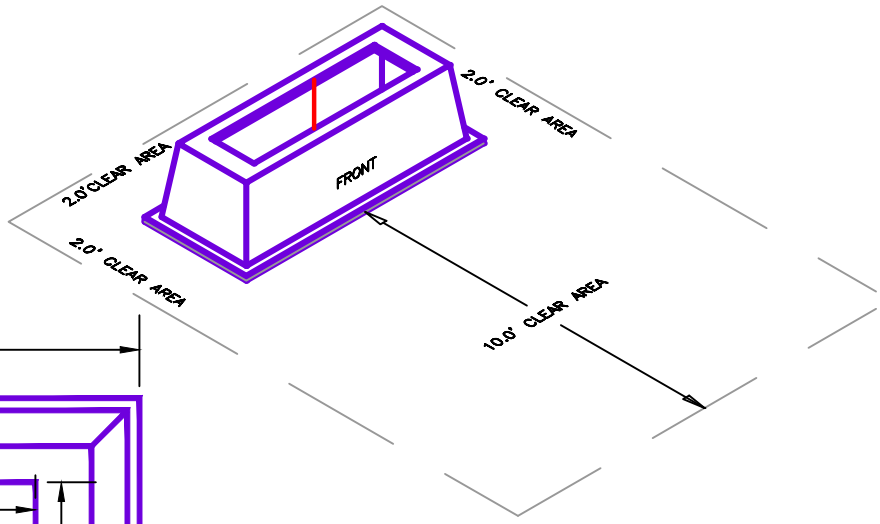

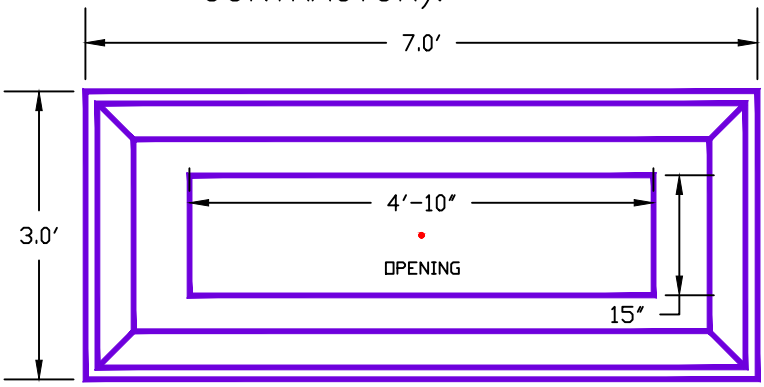

PLAN VIEW

1. 3 PHASE SECTIONLIZING CABINET BASE (GROUND SLEEVE) SHALL BE PROVIDED BY IDAHO FALLS POWER BUT SHALL BE INSTALLED TO REQUIRED GRADE BY THE CONTRACTOR/DEVELOPER.
2. THE PAD LOCATION SHALL BE COMPACTED TO A MINIMUM OF 95% OF MAXIMUM DENSITY PRIOR TO PLACEMENT.
3. THE TOP OF THE BASE SHALL BE INSTALLED A MINIMUM OF 6" ABOVE FINISHED GRADE.
4. POSITIVE DRAINAGE MUST BE PROVIDED AWAY FROM THE CABINET BASE.

IDAHO FALLS POWER

SERVICE POLICY
FIGURE 5
DATE MODIFIED: 01/15/2019

SINGLE PHASE SECTIONALIZING CABINET BASE (GROUND SLEEVE)

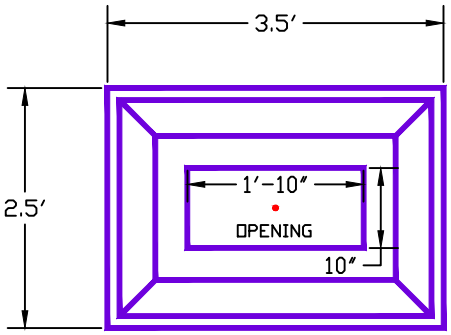

PLAN VIEW

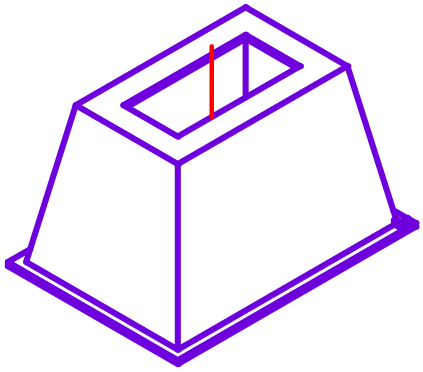

• GROUND ROD TO BE INSTALLED IN CENTER OF OPENING

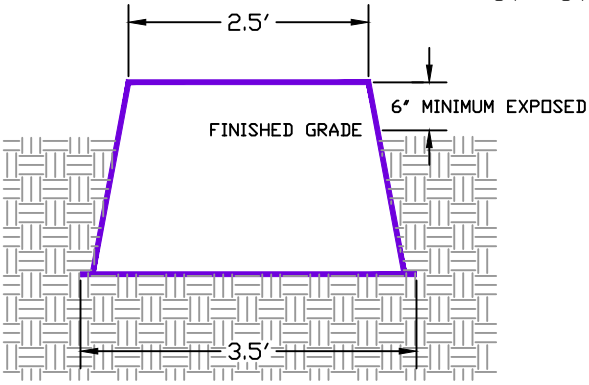

FRONT VIEW

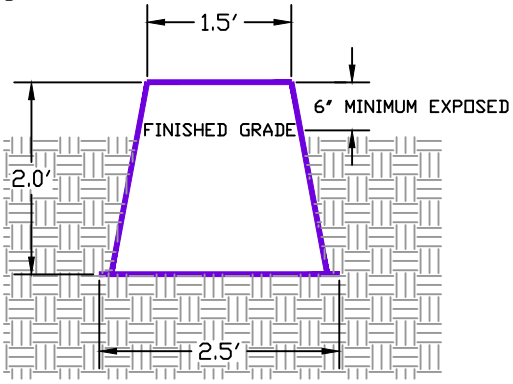

END VIEW

1. SINGLE PHASE SECTIONALIZING CABINET BASE (GROUND SLEEVE) SHALL BE PROVIDED BY IDAHO FALLS POWER BUT SHALL BE INSTALLED TO REQUIRED GRADE BY THE CONTRACTOR/DEVELOPER.
2. THE PAD LOCATION SHALL BE COMPACTED TO A MINIMUM OF 95% OF MAXIMUM DENSITY PRIOR TO PLACEMENT.
3. THE TOP OF THE BASE SHALL BE INSTALLED A MINIMUM OF 6" ABOVE FINISHED GRADE.
4. POSITIVE DRAINAGE MUST BE PROVIDED AWAY FROM THE CABINET BASE.
5. ANY DEVIATION IN THE FINAL GRADE OR LOCATION OF THE CABINET BASE MUST BE APPROVED BY IDAHO FALLS POWER.

IDAHO FALLS POWER

SERVICE POLICY
FIGURE 6
DATE MODIFIED: 01/15/2019

SECONDARY SERVICE PEDESTAL BASE (GROUND SLEEVE)

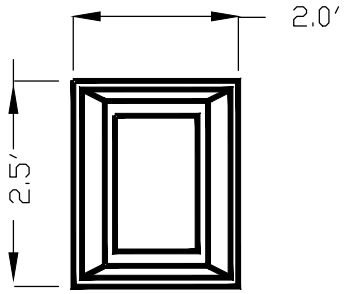

PLAN VIEW

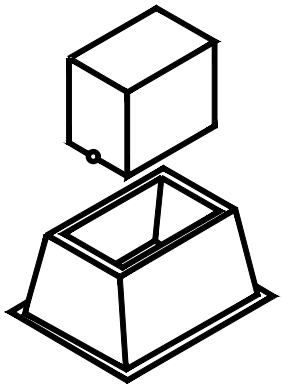

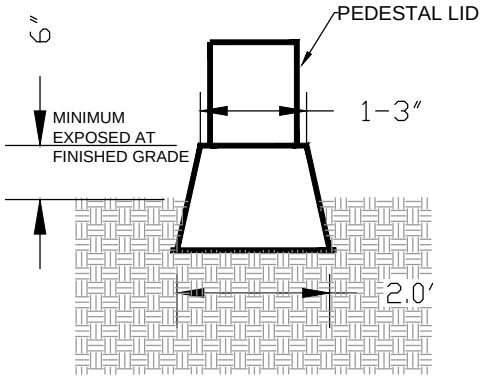

FRONT VIEW

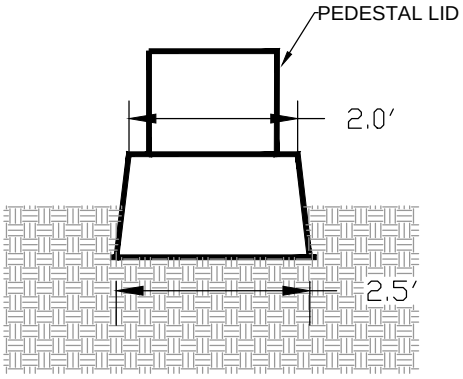

SIDE VIEW

1. SECONDARY SERVICE PEDESTAL. BASE (GROUND SLEEVE) SHALL BE PROVIDED BY IDAHO FALLS POWER, BUT SHALL BE INSTALLED TO REQUIRED GRADE BY THE CONTRACTOR/DEVELOPER.
2. THE TOP OF THE BASE SHALL BE INSTALLED A MINIMUM OF 6" ABOVE FINISHED GRADE.
3. POSITIVE DRAINAGE MUST BE PROVIDED AWAY FROM THE PEDESTAL BASE.

IDAHO FALLS POWER

SERVICE POLICY
FIGURE 7
DATE MODIFIED: 01/15/2019

TYPICAL BELL END INSTALLATION DIAGRAM

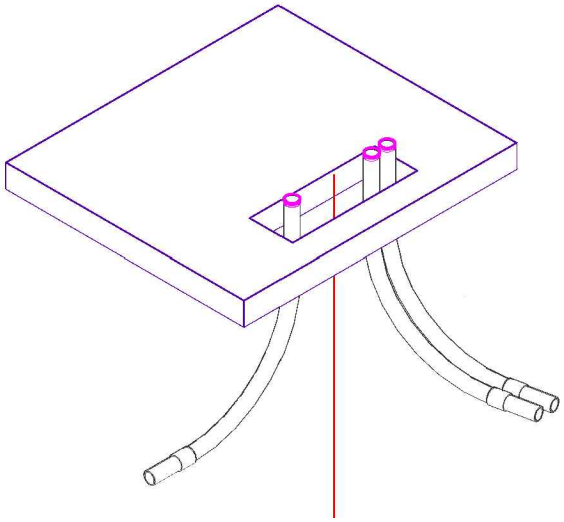

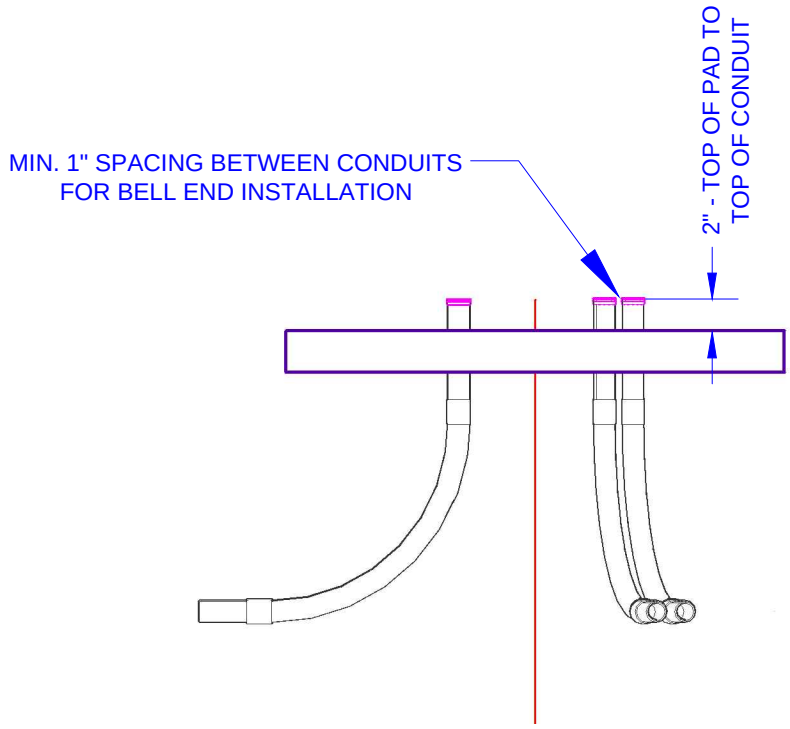

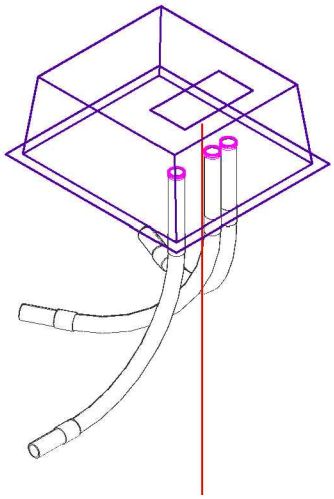

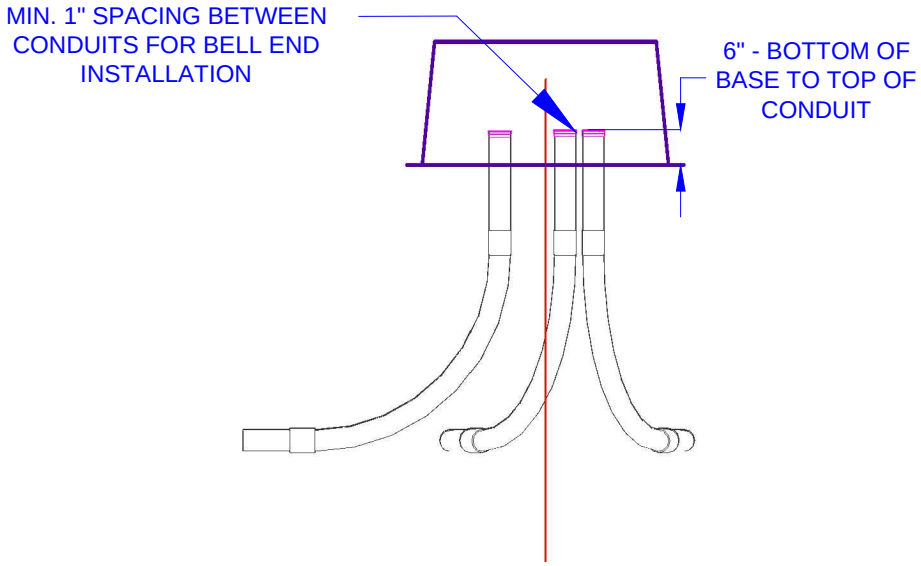

1. ALL CONDUIT (PRIMARY AND SECONDARY) MUST BE CUT TO 6" FROM BOTTOM OF BASE OR 2" ABOVE TOP OF CONCRETE PAD.
2. BELL ENDS MUST BE SUPPLIED AND INSTALLED BY DEVELOPER/CONTRACTOR.
3. ALL CONDUITS MUST BE CAPPED AND LABELED TO IDENTIFY ROUTING.
4. BELL END INSTALLATION DETAIL TO BE USED FOR ALL ELECTRICAL FACILITIES INCLUDING SECONDARY PEDESTALS, SWITCH CABINETS, TRANSFORMERS, AND LIGHT POLE BASES.
5. TEMPORARY SINGLE PHASE TRANSFORMER PADS SHALL HAVE CONDUIT NO MORE THAN 2" ABOVE PAD.

IDAHO FALLS POWER

SERVICE POLICY
FIGURE 8
DATE MODIFIED: 01/15/2019

JOINT UTILITY TRENCH

PLAN VIEW

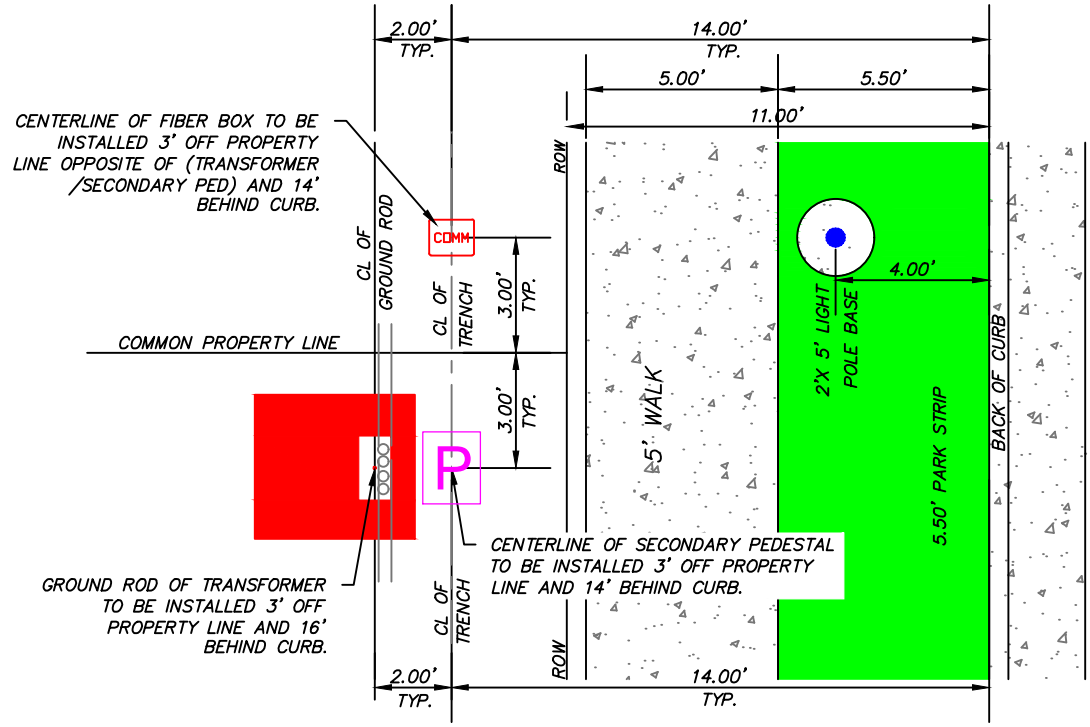

TRENCH PROFILE

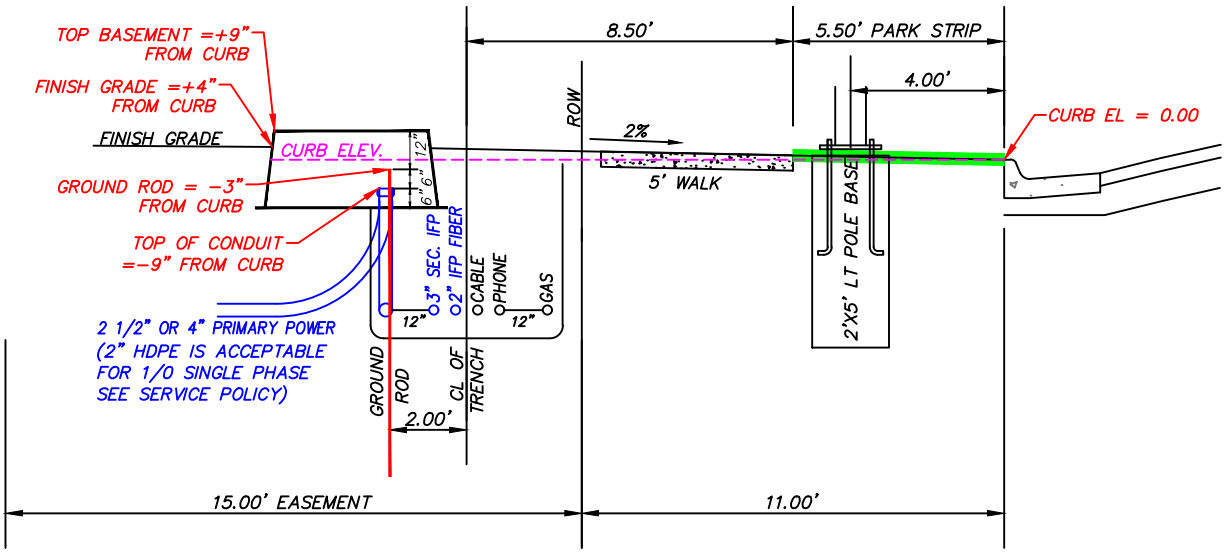

TRENCH DETAIL

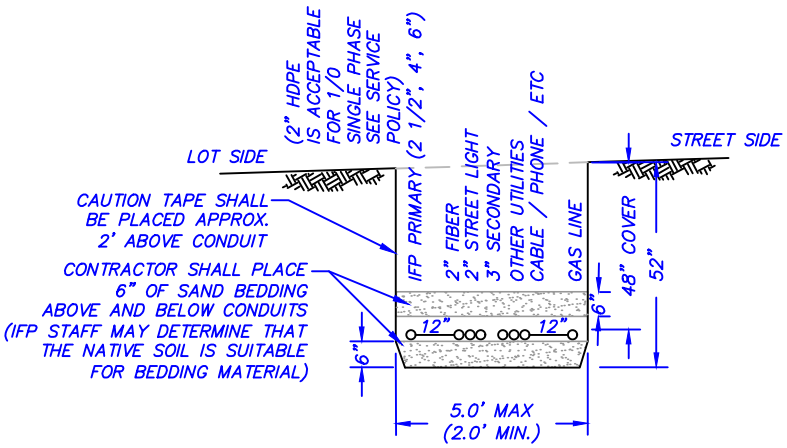

DISTANCES MAY VARY - SEE ELECTRICAL SITE PLANS PRIOR TO CONSTRUCTION

IDAHO FALLS POWER

SERVICE POLICY
FIGURE 9
DATE MODIFIED: 1/14/2020

LIGHT POLE FOUNDATION DETAIL

PLAN VIEW

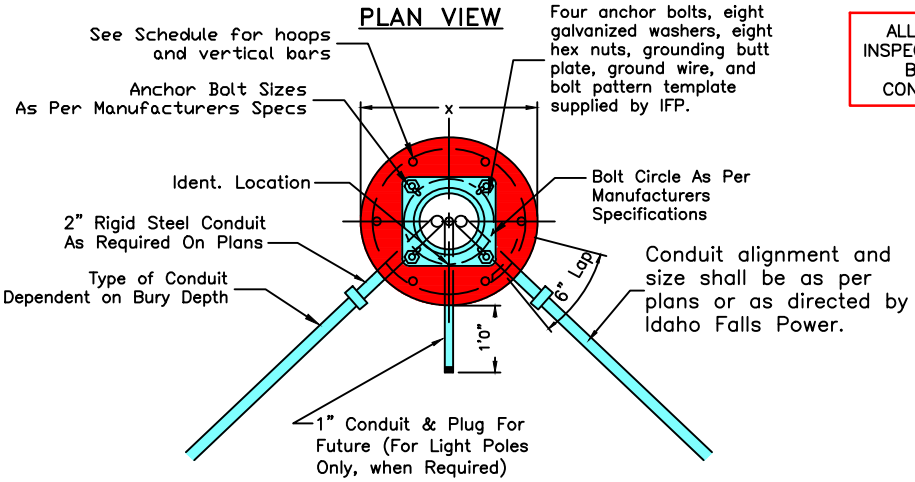

ALL BASES SHALL BE INSPECTED AND APPROVED BY IFP PRIOR TO CONCRETE PLACEMENT

NOT TO SCALE

40' LIGHT POLE BASE PATTERN (TYPE C)

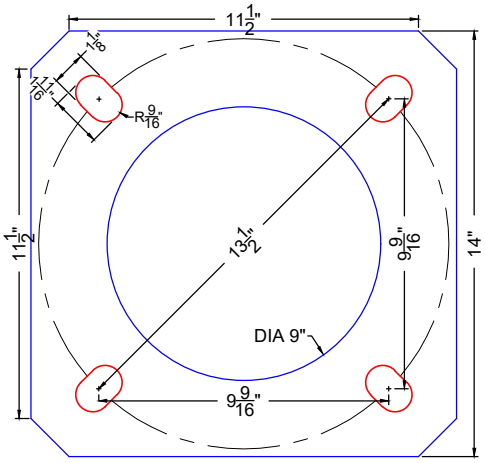

POLE FOUNDATION SCHEDULE										
STRUCTURE TYPE	FOUNDATION TYPE	X	Y	HOOPS			VERTICAL RODS			CU. YDS. CONCRETE
				NO.	SIZE	LIN. FT.	NO.	SIZE	LIN. FT.	
30' Light Pole Pedestrian Signal Pole	A	2'–0"	5'–0"	4	#4	23'–0"	6	#4	28'–0"	0.6
40' Light Pole	C	3'–0"	8'–0"	5	#4	44'–2"	8	#6	61'–4"	2.1

SIDE VIEW POLE FOUNDATION BASE DETAIL (SIDEWALK AREAS)

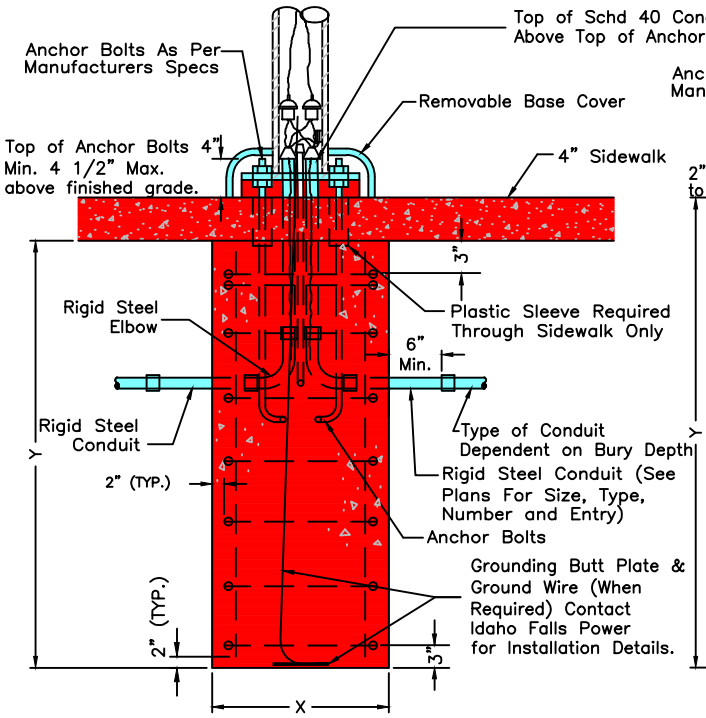

SIDE VIEW POLE FOUNDATION BASE DETAIL (LANDSCAPED AREAS)

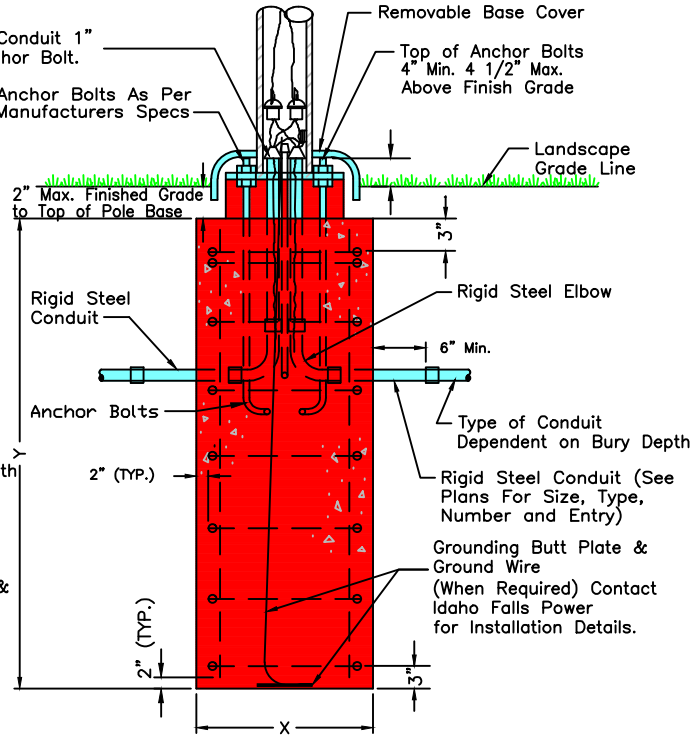

30' LIGHT POLE BASE PATTERN (TYPE A)

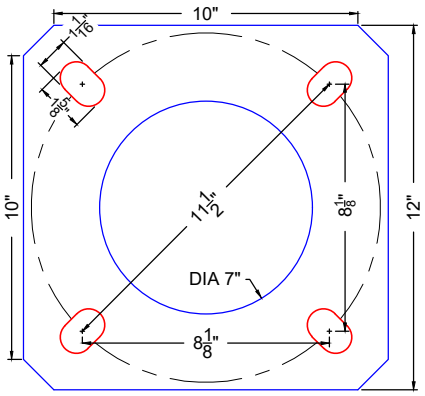

IF PRE–CAST CONCRETE LIGHT POLE IT SHALL MEET OR EXCEED ALL SPECIFICATIONS ABOVE

CONCRETE SHALL BE CLASS 4 CONCRETE (4,000 PSI) SEE SECTION 703.2.4 CONCRETE MIX CITY OF IDAHO FALLS SUPPLEMENTAL ISPWC STANDARDS

IDAHO FALLS POWER

SERVICE POLICY
FIGURE 10
DATE MODIFIED: 12/5/2019

TYPICAL RESIDENTIAL UNDERGROUND SERVICE

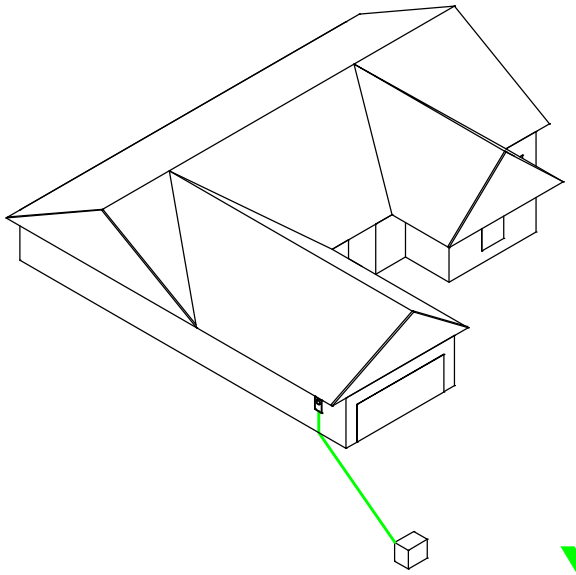

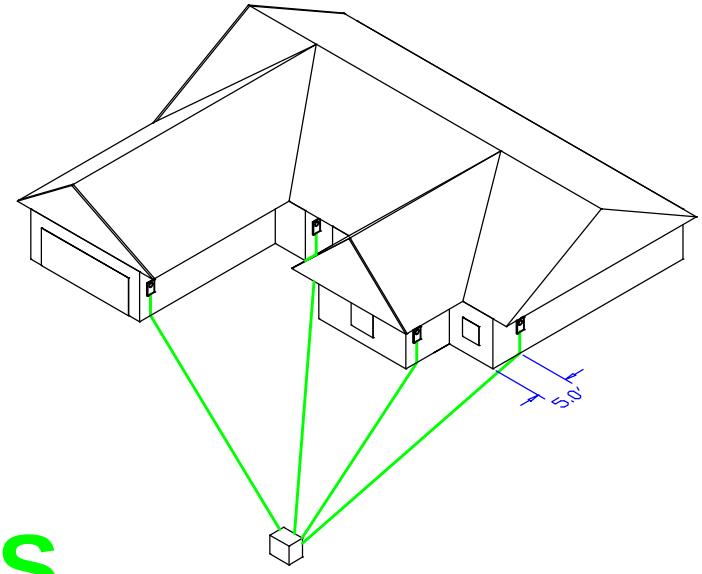

YES

1. Conduit will have a maximum of 360° of bends per run.
2. Idaho Falls Power will inspect all conduit prior to backfilling.
3. Meter must be front yard accessible unless prior IFP approval has been obtained.

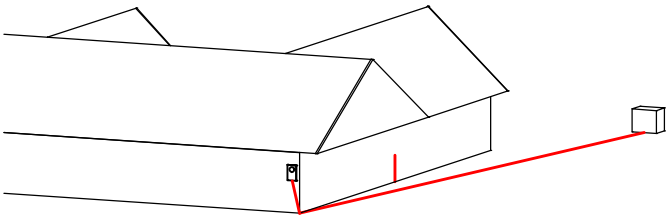

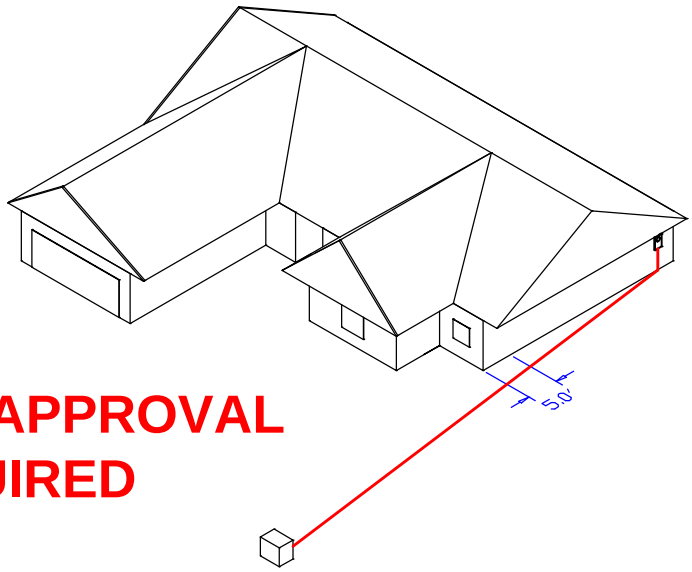

PRIOR IFP APPROVAL REQUIRED

IDAHO FALLS POWER

SERVICE POLICY
FIGURE 11
DATE MODIFIED: 01/15/2019

TYPICAL RESIDENTIAL OVERHEAD SERVICE

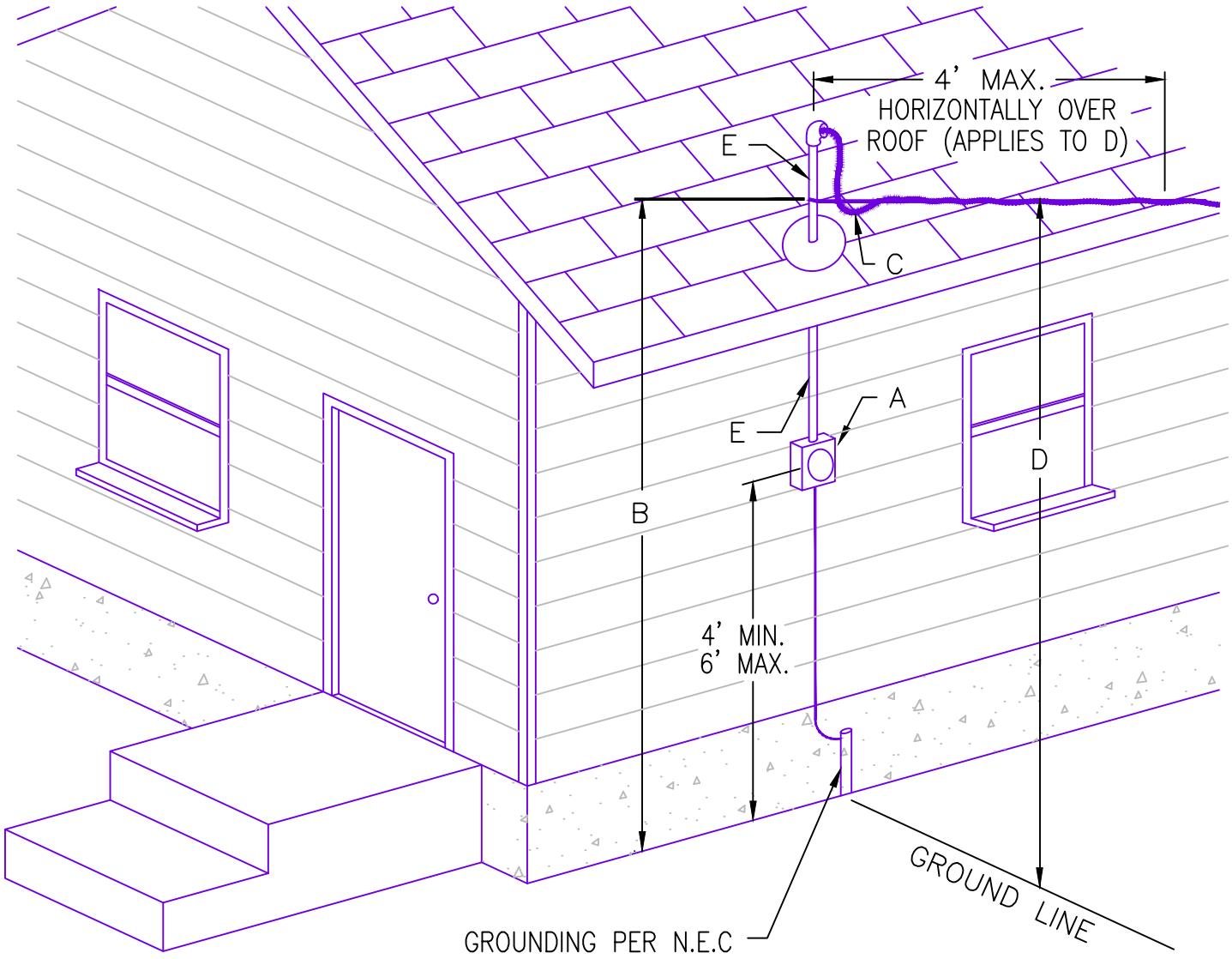

A. Meter location must be approved by Utility prior to installation.
B. Point of attachment 12' minimum above finished grade, or from any platform or projection from which conductors may be reached.
C. The cable and drip loop must be at least 18" above roof.
D. 12' above finished grade – 14' over residential driveways – 16' over streets. More if practical.
E. Service mast needs to be sized so as to support service conductors with a minimum size of 2" rigid galvanized steel (RGS) or IMC conduit.
NOTE: Clearances B, C, and D are based on the current National Electrical Safety Code and are applicable where the voltage is limited to 150 volts to ground.

IDAHO FALLS POWER
SERVICE POLICY
FIGURE 12
DATE MODIFIED: 01/03/2019

ELECTRICAL SERVICE REQUIREMENTS

SEPARATION OF METER ASSEMBLIES FOR ELECTRIC AND GAS SERVICES

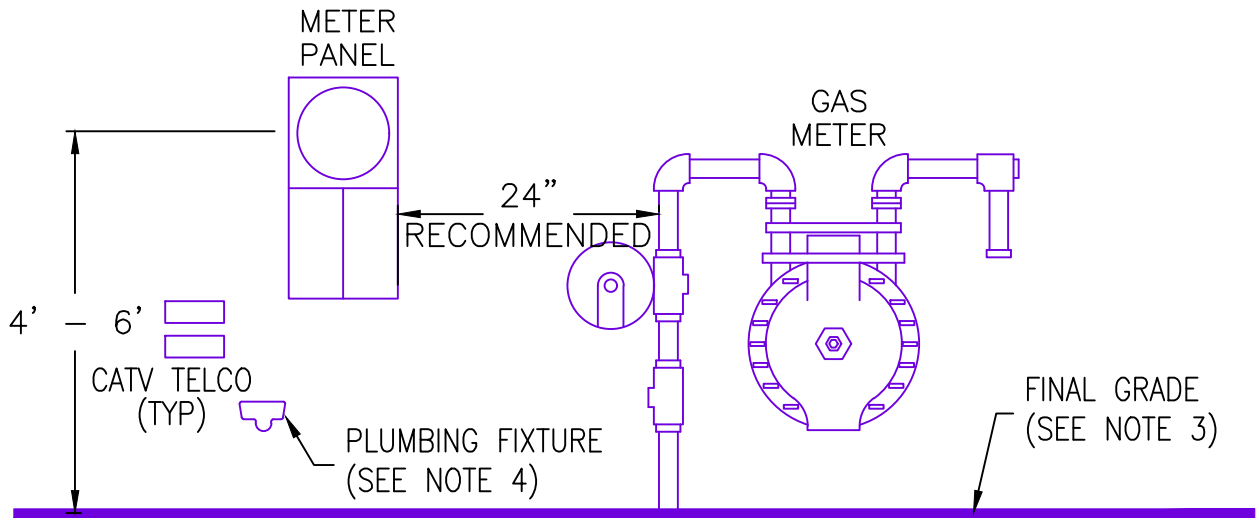

NOTES:

1. Size and dimensions of panels will vary. Drawings are not to scale.
2. This drawing pertains to both overhead and underground electric service applications.
3. Maintain 3' of clear, level and unobstructed work space in front of both meters.
4. Plumbing fixtures which extend more then 6" out from wall surface must be located a safe distance from the outside edge of the meter panel.

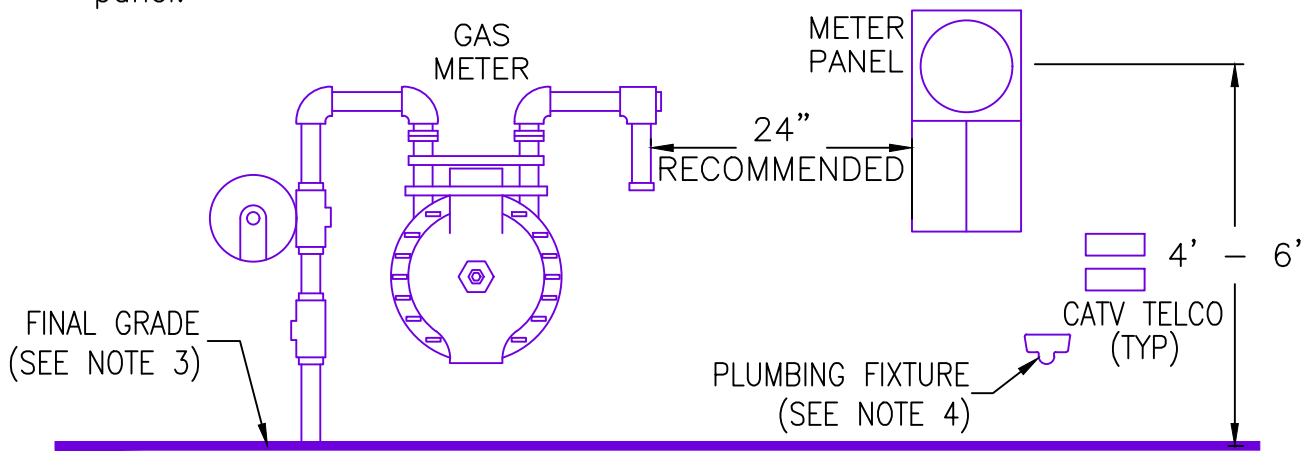

IDAHO FALLS POWER

SERVICE POLICY
FIGURE 13

DATE MODIFIED: 01/03/2019

FREE STANDING METER PANEL

(POST MOUNTED – 1ø)
(RESIDENTAIL UP TO 200 AMPS ONLY)

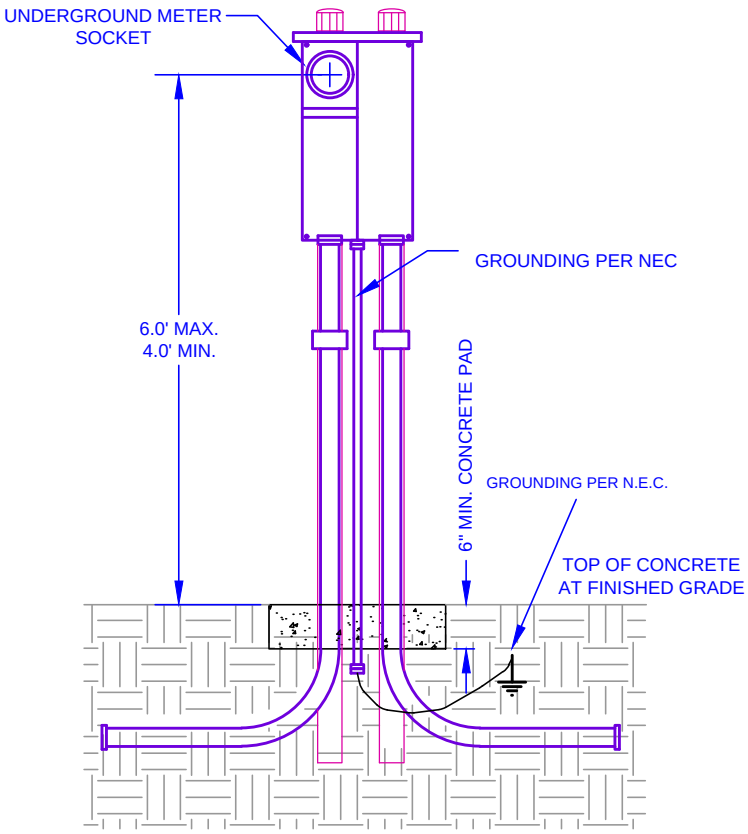

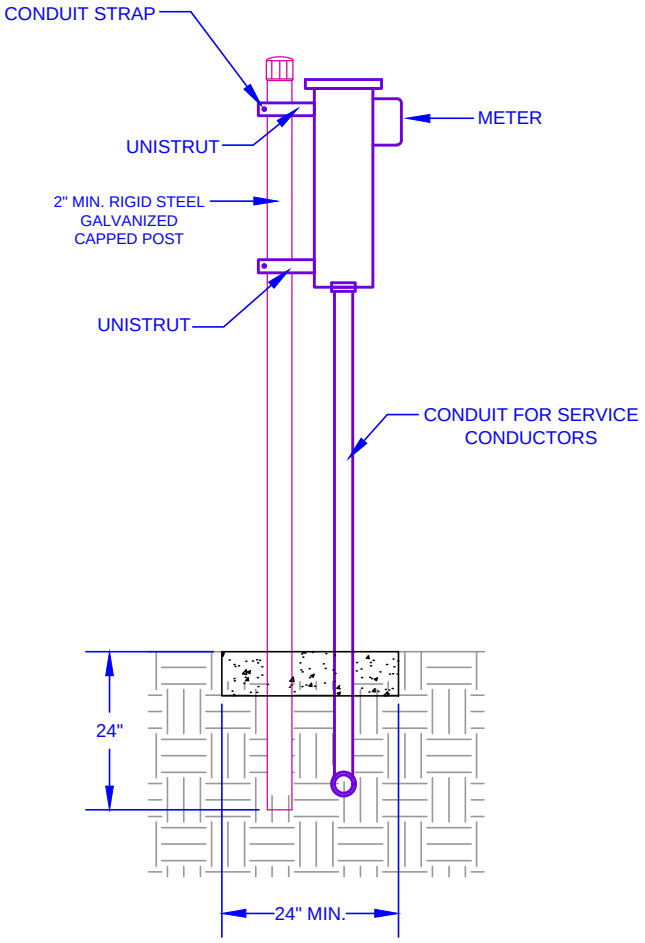

CUSTOMER WILL FURNISH AND INSTALL:

- METER SOCKET ENCLOSURE (UNDERGROUND TYPE)
- PEDESTAL HARDWARE
- CONDUIT
- RIGHT OF WAY
- TRENCH EXCAVATION AND BACKFILL
- GROUNDING PER NEC
- CONCRETE PAD, 24" X 24" X 6" DEEP

ADDITIONAL REQUIREMENTS:

1. WRITTEN APPROVAL FROM THE POWER COMPANY MUST BE OBTAINED BEFORE INSTALLING A FREE STANDING PEDESTAL.

2. THE METER PEDESTAL IS TYPICALLY LOCATED ADJACENT TO, OR IN, THE EASEMENT CLOSE TO THE DRIVEWAY. THE EXACT LOCATION OF THE METER MUST BE SPECIFIED AND/OR APPROVED BY THE POWER COMPANY.

3. REFER TO SERVICE POLICY FOR UNDERGROUND AND CONDUIT REQUIREMENTS.

4. SERVICE CONDUIT MUST BE PLUMB IN ALL DIRECTIONS.

5. METER PANEL SHOWN CAN BE USED IN 3–PHASE APPLICATIONS ONLY WITH WRITTEN APPROVAL FROM IDAHO FALLS POWER.

6. FOR OL LISTED MANUFACTURED PEDESTAL SERVICE ENTRANCES, METER HEIGHT REQUIREMENTS MAY VARY.

IDAHO FALLS POWER

SERVICE POLICY
FIGURE 14
DATE MODIFIED: 12/31/2018

FREE STANDING CT METER
(POST MOUNTED – 1ø OR 3ø)

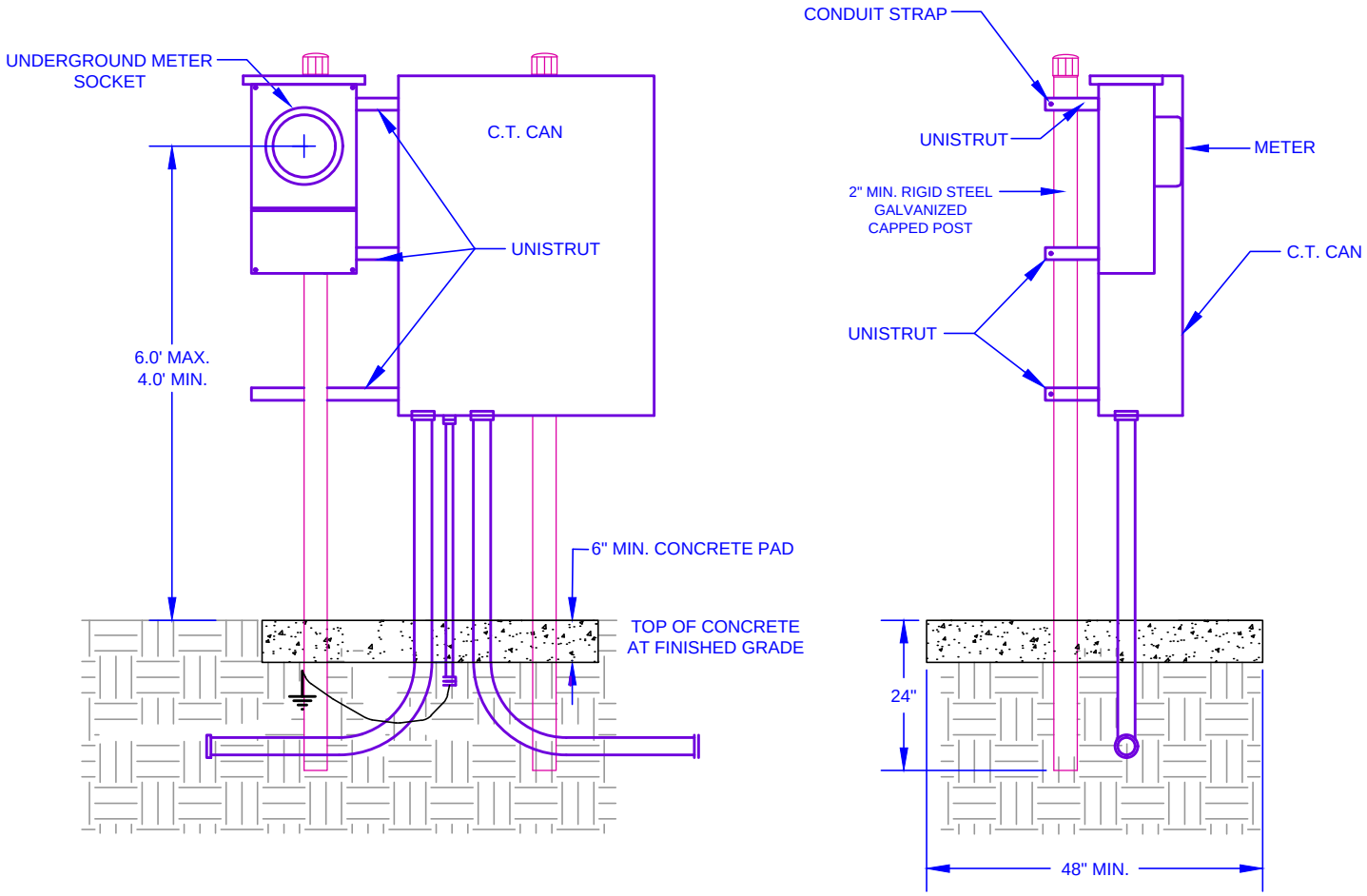

CUSTOMER WILL FURNISH AND INSTALL:

- METER SOCKET ENCLOSURE (UNDERGROUND TYPE)
- PEDESTAL HARDWARE
- CONDUIT
- RIGHT OF WAY
- TRENCH EXCAVATION AND BACKFILL
- GROUNDING PER NEC
- CONCRETE PAD, 48" X 48" X 6" DEEP

ADDITIONAL REQUIREMENTS:

1. WRITTEN APPROVAL FROM IDAHO FALLS POWER MUST BE OBTAINED BEFORE INSTALLING A FREE STANDING PEDESTAL.

2. THE METER PEDESTAL IS TYPICALLY LOCATED ADJACENT TO, OR IN, THE EASEMENT CLOSE TO THE TRANSFORMER. THE EXACT LOCATION OF THE METER MUST BE SPECIFIED AND/OR APPROVED BY IDAHO FALLS POWER.

3. REFER TO SERVICE POLICY FOR UNDERGROUND AND CONDUIT REQUIREMENTS.

4. SERVICE CONDUIT MUST BE PLUMB IN ALL DIRECTIONS.

5. C.T. CAN MUST BE ADJACENT TO METER BASE.

IDAHO FALLS POWER

SERVICE POLICY
FIGURE 15
DATE MODIFIED: 07/31/2013

CT CABINET WITH GROUND SLEEVE (801 - 4000 AMPS)

FOR OVER 4000 AMPS CONTACT IDAHO FALLS POWER

PLAN VIEW

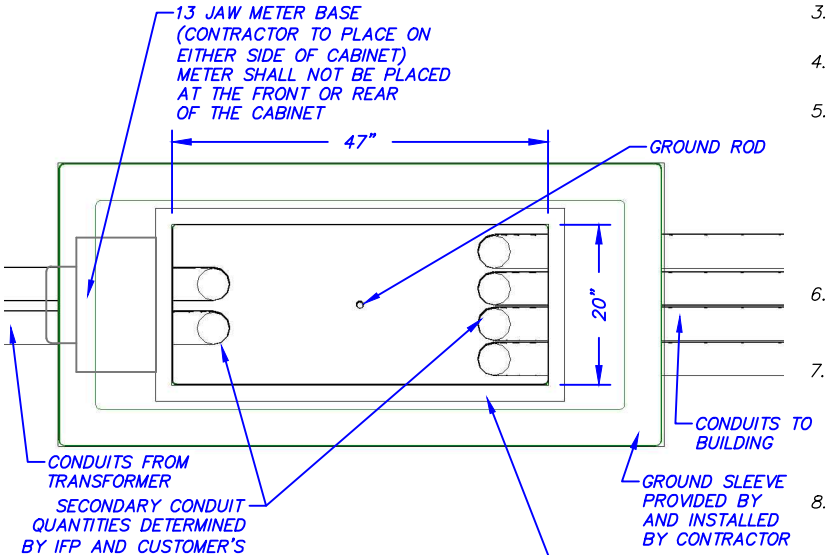

PROFILE VIEW

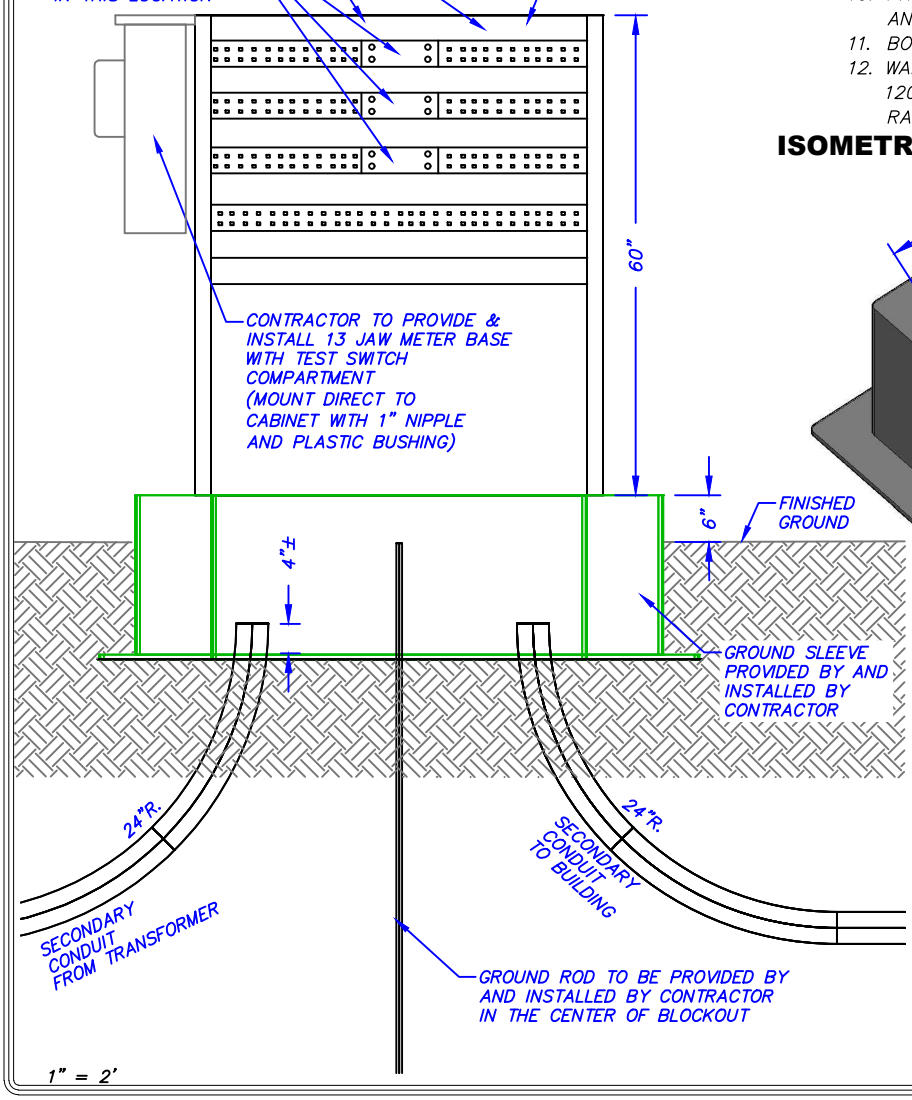

1" = 2'

ADDITIONAL NOTES:

1. INSTALL CONDUITS AS SHOWN IN DETAIL (NUMBER OF CONDUITS AND SIZE WILL VARY PER PLANS.
2. INSTALL BELL ENDS AND CAP ALL CONDUITS.
3. 24" RADIUS ELBOW CAN BE UTILIZED. IDENTIFY ALL CONDUITS FOR ROUTING.
4. CONTRACTOR TO PLACE CONTRACTOR PROVIDED GROUND GROUND ROD AS SHOWN IN DETAIL.
5. CONTRACTOR TO PROVIDE AND INSTALL GROUND SLEEVE WITH AN OPENING TO MATCH PROPOSED CABINET AS SHOWN. (A CONCRETE PAD CAN BE UTILIZED INSTEAD OF GROUND SLEEVE BUT MUST HAVE A 18"–24" BASEMENT FOR CONDUITS – CONCRETE PAD MUST MEET CT CABINET MANUFACTURER STANDARDS FOR STRENGTH OF THE FULLY LOADED CT CABINET AND BE MIN. 6" ABOVE GRADE)
6. CONTACT IFP FOR INSPECTION. TOP OF THE GROUND SLEEVE (CONCRETE PAD) SHALL BE 6" ABOVE FINISHED GRADE. POSITIVE DRAINAGE MUST BE PROVIDED.
7. CT CABINET WITH SPLIT BUS PER AMERICAN MIDWEST POWER SERVICE CONNECTION CABINET 'SCC' WITH CT PROVISION OR APPROVED EQUAL TO BE PROVIDED AND INSTALLED BY CONTRACTOR. (IDAHO FALLS POWER MUST APPROVE CT CABINET BEFORE ORDERING AND INSTALLING)
8. IDAHO FALLS POWER TO SIZE AND INSTALL SECONDARY CONDUCTOR FROM TRANSFORMER TO CT CABINET. CONTRACTOR MUST SUPPLY TERMINATION LUGS.
9. CONTRACTOR TO SUPPLY AND INSTALL ALL SECONDARY CONDUCTOR FROM CT CABINET TO BUILDING. CONTRACTOR TO PROVIDE AND INSTALL 13 JAW METER BASE WITH TEST SWITCH COMPARTMENT TO BE MOUNTED DIRECTLY TO THE CABINET WITH 1" NIPPLE AND PLASTIC BUSHING.
10. PROVIDE 2' CLEARANCE ON ALL SIDES EXCEPT FRONT PROVIDE 3' AND BE ABLE TO OPEN AT LEAST 90° WITHOUT ANY OBSTRUCTION.
11. BONDING WILL BE REQUIRED IF CONDUIT 90° BEND ARE METALLIC.
12. WALL MOUNTED CT METERING MAY BE ACCEPTABLE FOR UP TO 1200 AMPS SO LONG AS THE WALL MOUNTED CT METERING IS RATED FOR 1200 AMPS AND MEETS ALL UL RATINGS.

ISOMETRIC VIEW OF GROUND SLEEVE

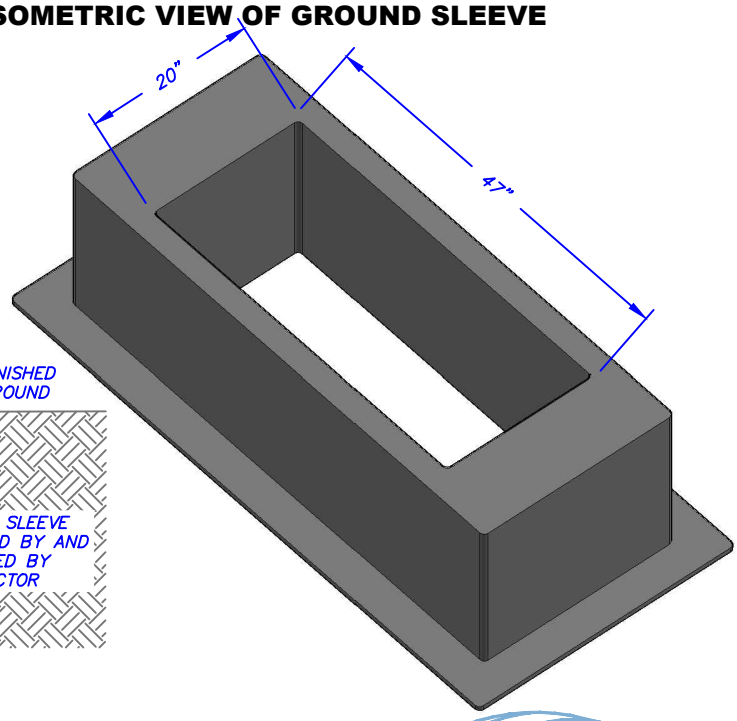

IDAHO FALLS POWER

SERVICE POLICY

FIGURE 16

DATE MODIFIED: 11/25/2019

RISER DETAIL FOR 6" CONDUIT

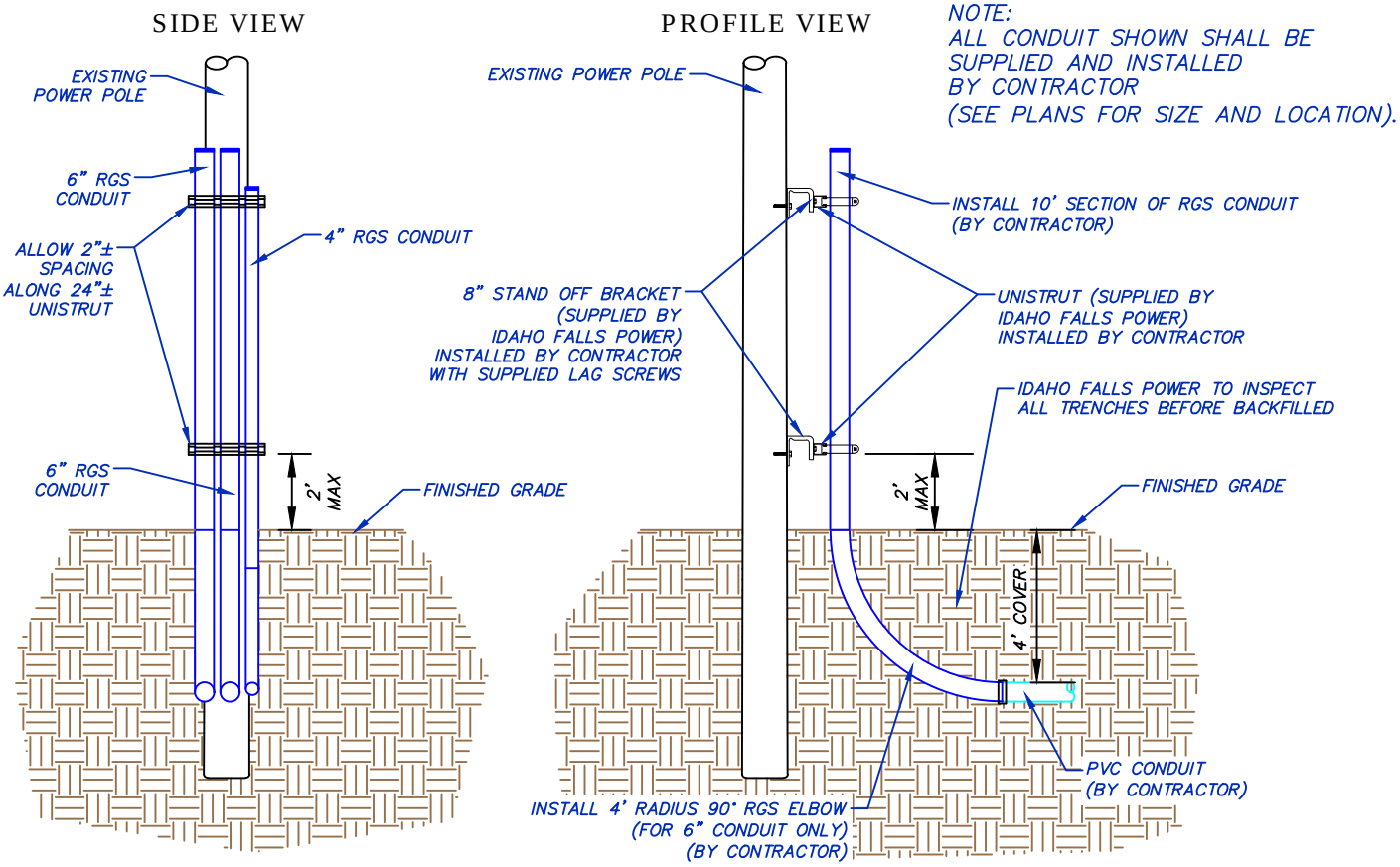

RISER DETAIL FOR 2" - 4" CONDUIT

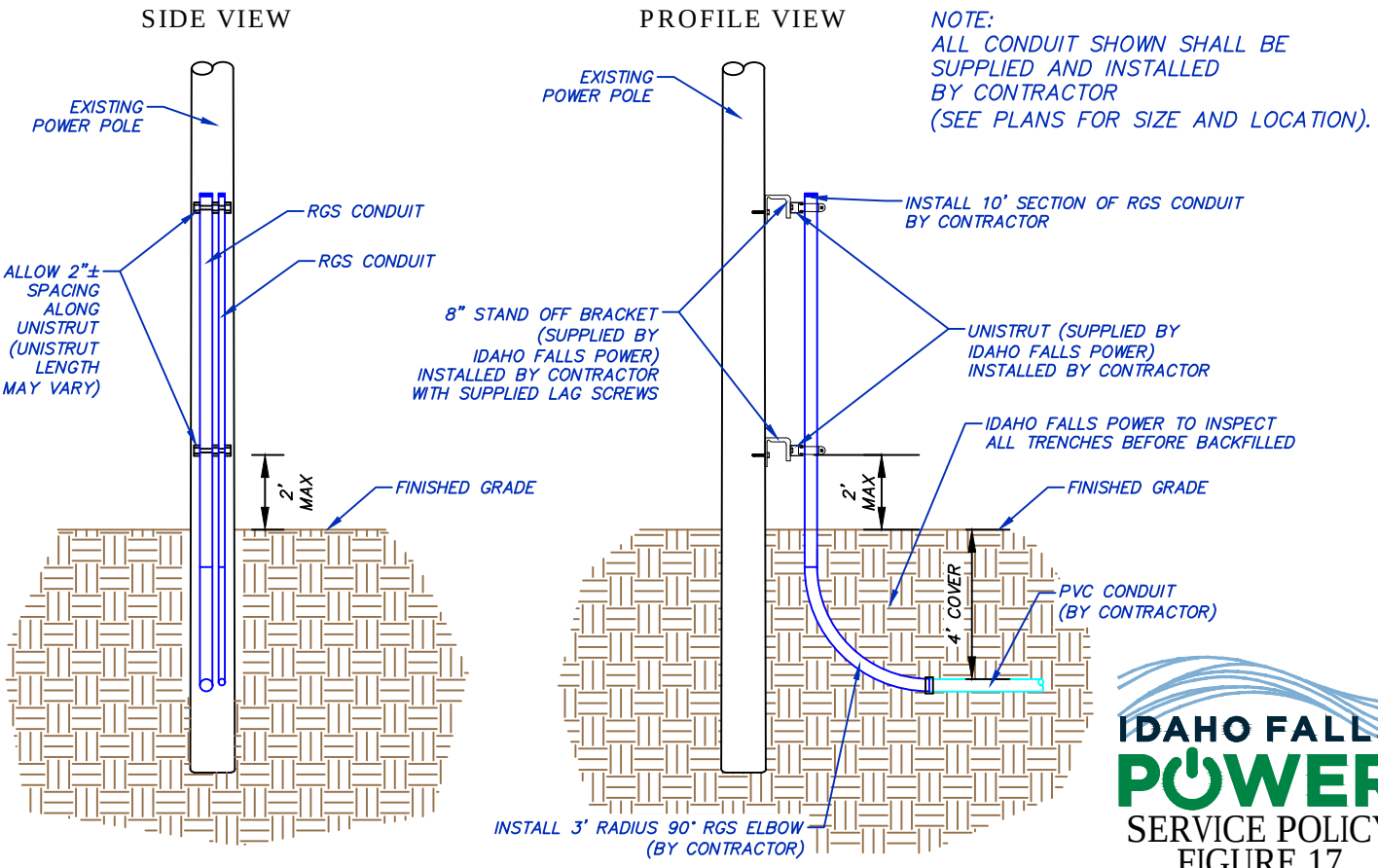

1" = 5'

IDAHO FALLS POWER

SERVICE POLICY
FIGURE 17
DATE MODIFIED: 12/20/2018

OVERHEAD CLEARANCES

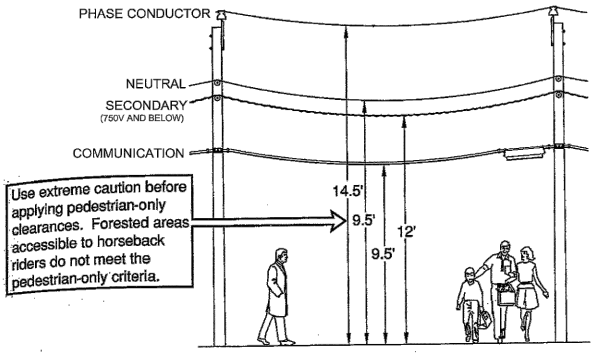

SPACES AND WAYS SUBJECT TO PEDESTRIANS OR RESTRICTED TRAFFIC ONLY

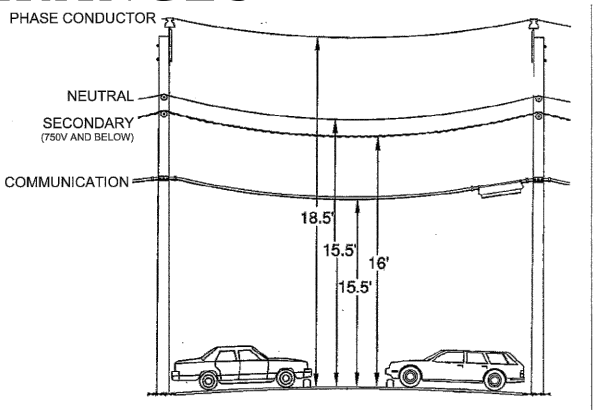

DRIVEWAYS, PARKING LOTS, AND ALLEYS

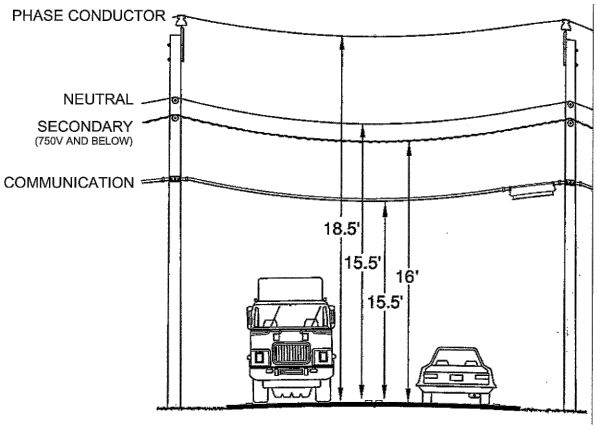

ROADS, STREETS, AND OTHER AREAS SUBJECT TO TRAFFIC

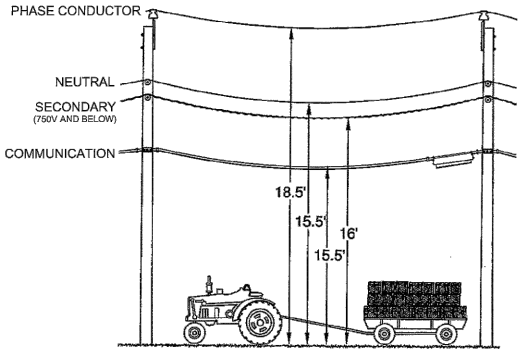

LAND TRAVERSED BY VEHICLES, SUCH AS CULTIVATED, GRAZING, FOREST, ORCHARD, ETC.

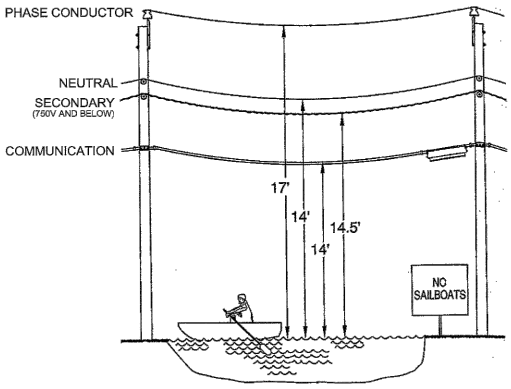

WATER AREAS NOT SUITABLE FOR SAIL BOATING OR WHERE SAILBOATING IS PROHIBITED

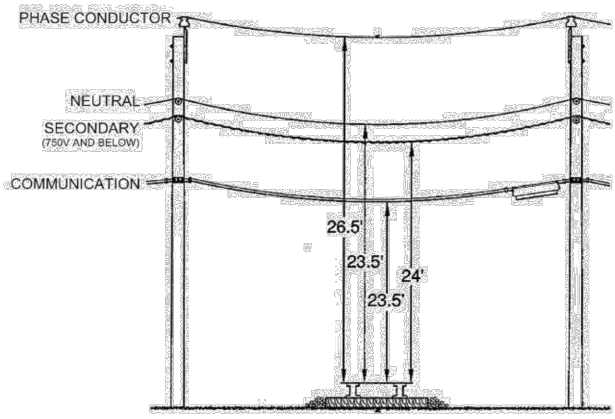

RAILROADS

RULES OF THE NESC AND THE NATIONAL ELECTRIC CODE (NEC) OVERLAP AT THE SERVICE POINT

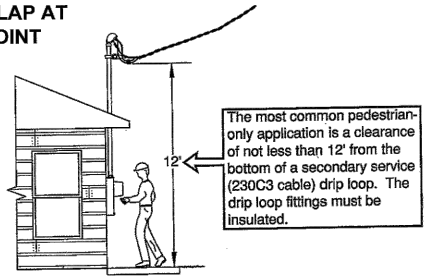

IDAHO FALLS POWER

SERVICE POLICY
FIGURE 18
DATE MODIFIED: 07/31/2013

OPERATION AND CUSTOMER CLEARANCES

Crane / Derrick Transmission Clearance

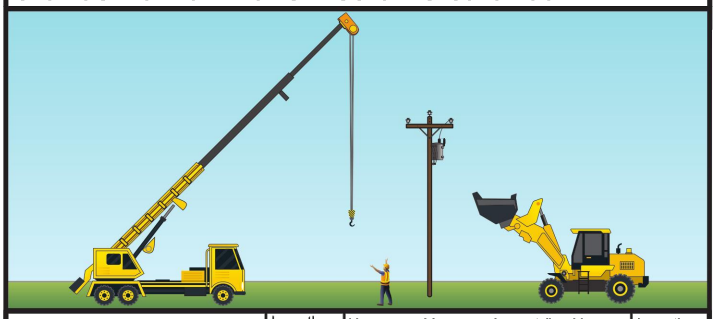

Crane / Derrick	Less than 50kV	Heavy machinery equipment (backhoes, front-end loaders, bulldozer, dump trucks)	Less than 50kV
Must Contact Electric Utility if maximum working radius in the work zone. *See OSHA 1926.1408 (a) (2)*	20 feet	Horizontal Minimum Clearance from. *See OSHA 1926.600 (a) (6)*	10 feet
Minimum Approach Distance, ONLY if Specific Controls in Place. *See OSHA 1926.1408 (a) (2) (iii)*	10 feet	Vertical Minimum Clearance from. *See OSHA 1926.600 (a) (6)*	10 feet

Crane, drilling rig & Mechanized Equipment Clearance

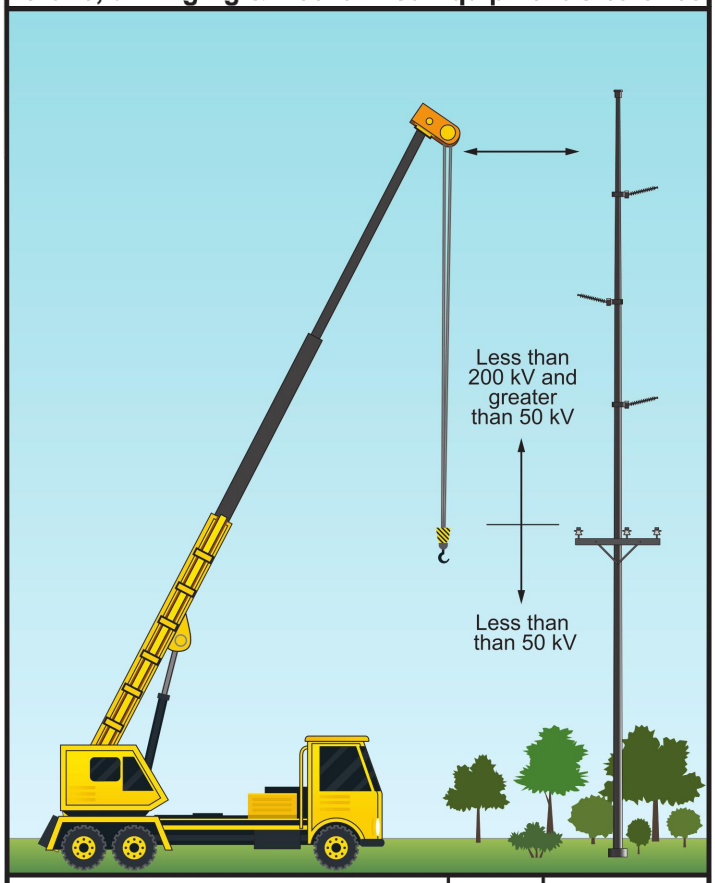

	Less than 50kV	Less than 200kV and Greater than 50
Must Contact Electric Utility if maximum working radius in the work zone. *See OSHA 1926.1408 (a) (2)*	20 feet	20 feet
Minimum Approach Distance, ONLY if Specific Controls in Place. *See OSHA 1926.1408 (a) (2) (iii)*	10 feet	15 feet

Scissor Lift & Scaffolding Clearance

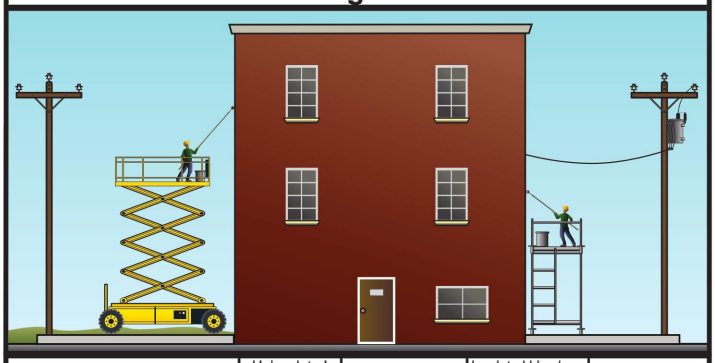

	Uninsulated Neutral Conductor	Insulated Line less than 300 Volts	Insulated Line less than 300 Volts to 750 volts	Uninsulated Lines 750 volts to 25 kV
Distance from Scaffold *See OSHA 1926.451 (f) (4)*	10 feet	3 feet	10 feet	10 feet
Worker or any conductive object *See OSHA 1910.333 (c) (3) (i) (B)*	Avoid Contact	1 feet	1 feet	2 feet

Light / Traffic Signal Pole - Vertical

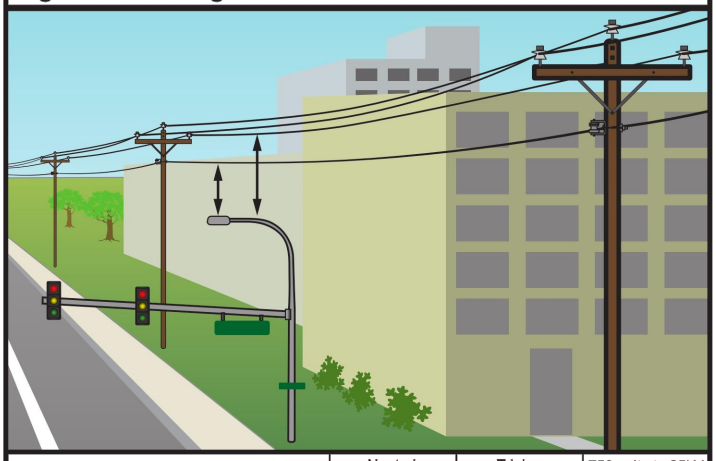

	Neutral	Triplex	750 volts to 25kV
Vertical - NESC 234B2	3 feet	3 feet	4.5 feet

** OSHA Minimum Clearances (typ. 10 ft.) apply when working on Light / Traffic Signal Pole See OSHA 1910.333 (c) (3) (i) (B)*

Light / Traffic Signal Pole - Horizontal

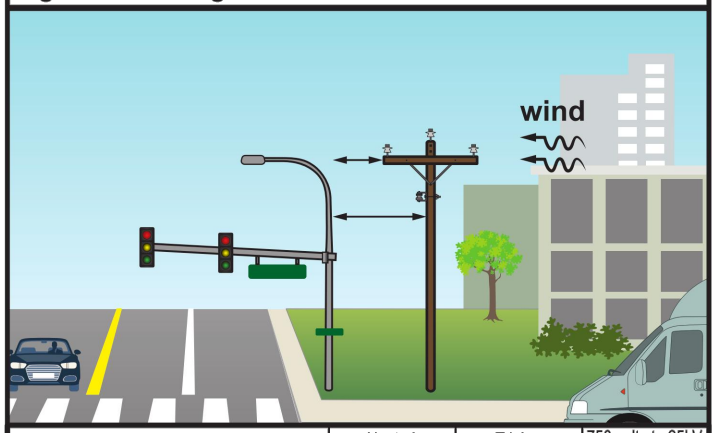

	Neutral	Triplex	750 volts to 25kV
Horizontal - NESC 234B1	3 feet	3 feet	5 feet
Horizontal 50MPH Wind - NESC 234B1	3 feet	3 feet	4.5 feet

** OSHA Minimum Clearances (typ. 10 ft.) apply when working on Light / Traffic Signal Pole See OSHA 1910.333 (c) (3) (i) (B)*

GUIDE FOR OPERATION OF EQUIPMENT NEAR POWER LINES
AND CUSTOMER OWNED POLES TO POWER LINES

SEE NESC AND OSHA FOR DETAILS AND EXCEPTIONS

DRAWING COURTESY OF HI-LINE ENGINEERING

IDAHO FALLS POWER

SERVICE POLICY
FIGURE 19
DATE MODIFIED: 2018

APPLICATION GUIDE FOR 2017 NESC TABLE 232-1

Railroads*

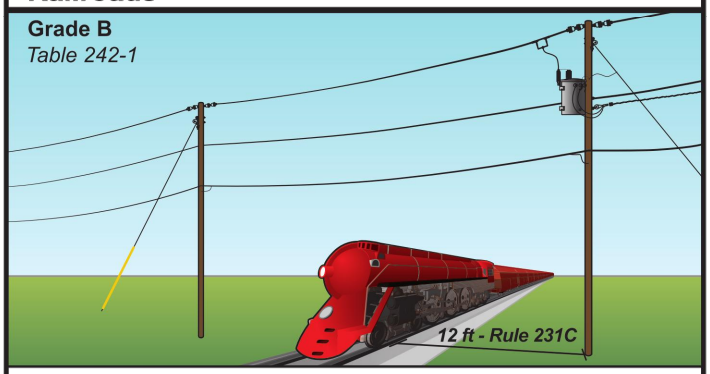

Vertical Clearance at Largest Vertical Sag *Table 232-1*

Neutral or Comm.	Grounded Span Guy	TPX	7.2/12.5 kV	14.4/25 kV	19.9/35 kV
23.5 ft		24.0 ft	26.5 ft		

**Railroad company may require greater clearance*

Trucks Over 8 Feet*

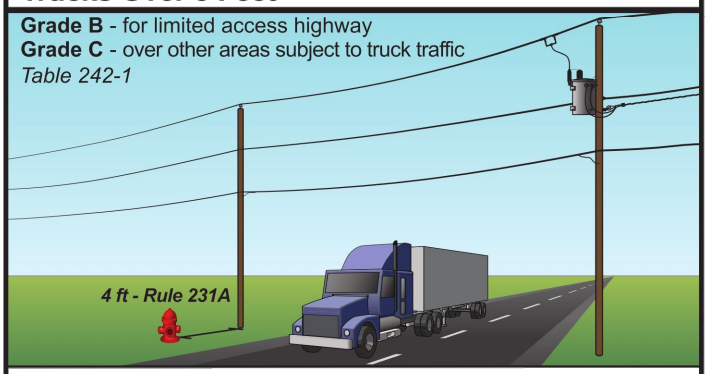

Vertical Clearance at Largest Vertical Sag *Table 232-1*

Neutral or Comm.	Grounded Span Guy	TPX	7.2/12.5 kV	14.4/25 kV	19.9/35 kV
15.5 ft		16.0 ft	18.5 ft		

**DOT may require greater clearance*

Water - No Sailboats

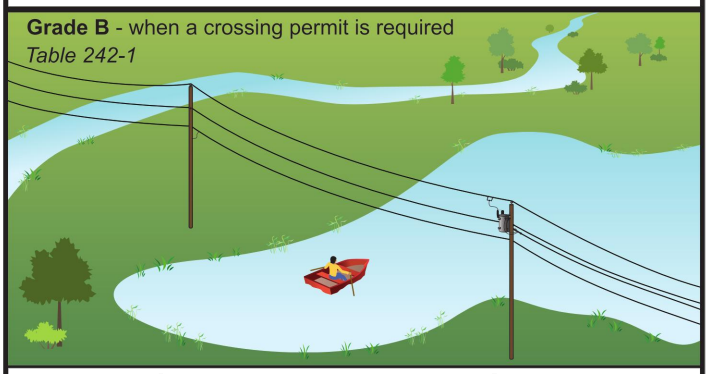

Vertical Clearance at Largest Vertical Sag *Table 232-1*

Neutral or Comm.	Grounded Span Guy	TPX	7.2/12.5 kV	14.4/25 kV	19.9/35 kV
14.0 ft		14.5 ft	17.0 ft		

**see NESC for sailboat clearances*

Over fields, orchards, forest, etc.

Vertical Clearance at Largest Vertical Sag *Table 232-1*

Neutral or Comm.	Grounded Span Guy	TPX	7.2/12.5 kV	14.4/25 kV	19.9/35 kV
15.5 ft		16.0 ft	18.5 ft		

**used by vehicles over 8 feet tall or riders on horseback*

Pedestrians Only*

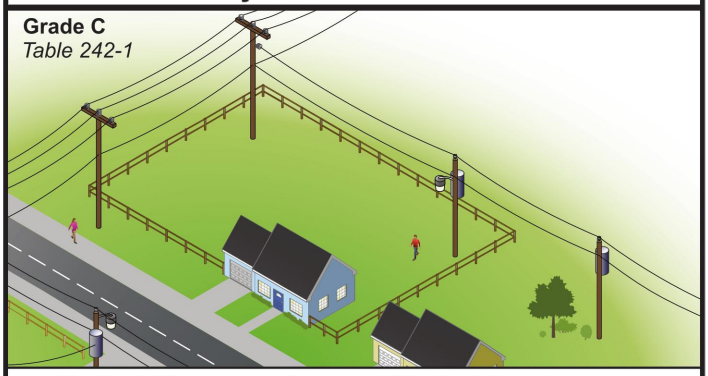

Vertical Clearance at Largest Vertical Sag *Table 232-1*

Neutral or Comm.	Grounded Span Guy	TPX	7.2/12.5 kV	14.4/25 kV	19.9/35 kV
9.5 ft		12.0 ft	14.5 ft		

**Not normally used by trucks or riders on horseback (very steep hills, swamps, etc.)*

Oversized Vehicles - greater than 14 feet in height

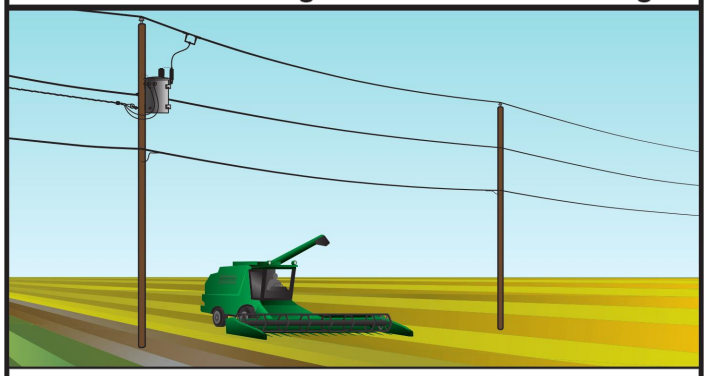

Vertical Clearance at Largest Vertical Sag *Table 232-1*

Neutral or Comm.	Grounded Span Guy	TPX	7.2/12.5 kV	14.4/25 kV	19.9/35 kV
X + 1.5 ft		X + 2 ft	X + 4.5 ft		

X = Known Height of oversized vehicle

SEE NESC AND OSHA FOR DETAILS AND EXCEPTIONS

DRAWING COURTESY OF HI–LINE ENGINEERING

IDAHO FALLS POWER

SERVICE POLICY
FIGURE 20
DATE MODIFIED: 2016

APPLICATION GUIDE FOR 2017 NESC

Clearance Over* or Near Grain Bins Loaded by Portable Auger NESC 234F2

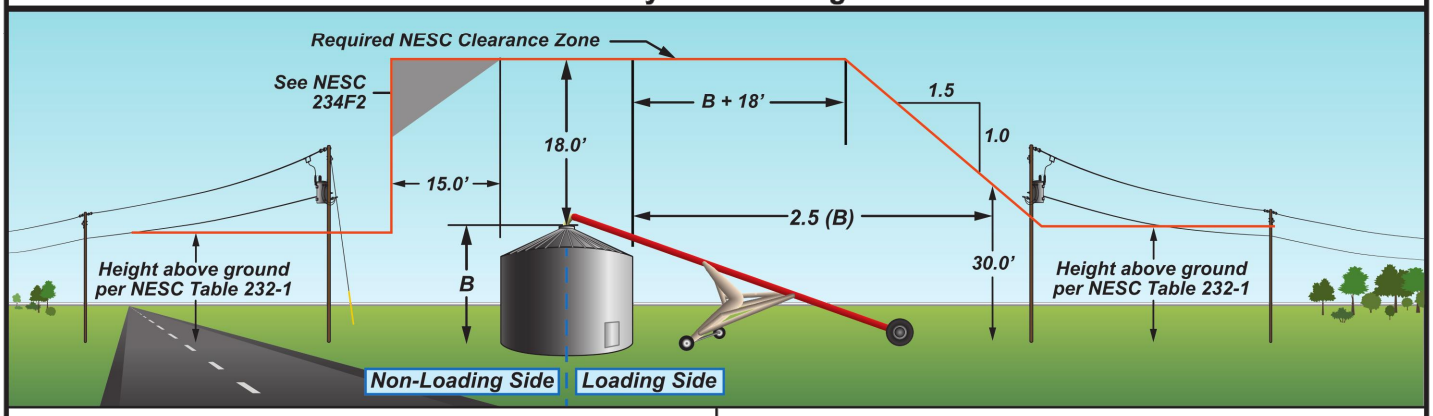

B = Vertical height to highest filling or probing port

Note: If B > 12 feet, vertical height of conductors is 30 feet at a distance equal to 2.5 times B

*Largest vertical sag

Non-Loading Side is when use of portable auger is limited by:

1. Permanent building/structure
2. Physical obstruction
3. Public road or other right of way
4. Designation or agreement

Clearance Over* or Near Swimming Pools NESC 234E1

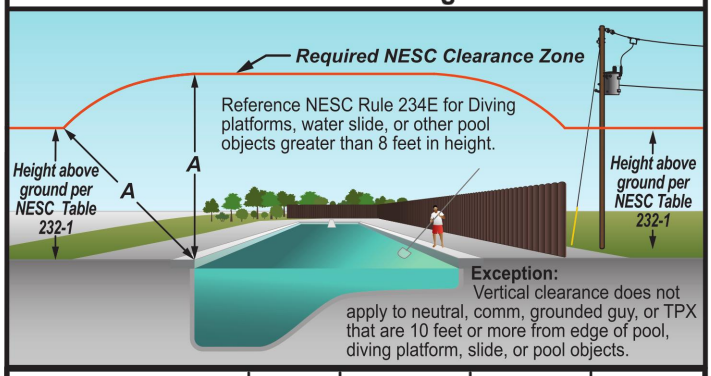

Neutral	TPX	7.2/12.5 kV	14.4/25 kV	19.9/35 kV
22.0 ft	22.5 ft	25.0 ft		

*Largest vertical sag

Aboveground pool with deck or ladder, clearance is from highest point upon which people can stand.

Clearance Over* or Near Billboards NESC 234C

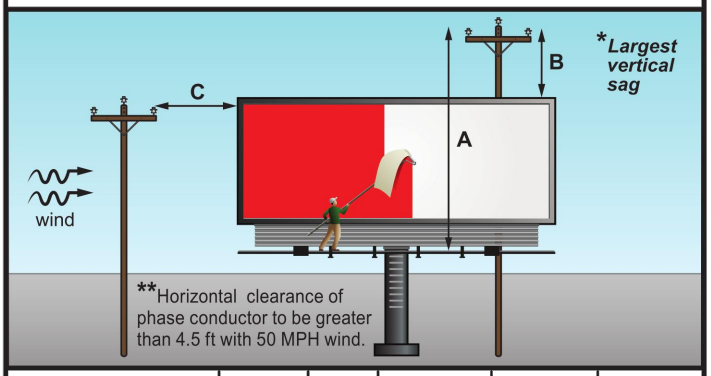

	Neutral	TPX	7.2/12.5kV	14.4/25kV	19.9/35kV
A-Where personnel walk	10.5 ft	11.0 ft	13.5 ft		
B - Other Surface	3.0 ft	3.5 ft	8.0 ft		
C - Horizontal**	4.5 ft	5.0 ft	7.5 ft		

Vertical Clearance Over* Buildings NESC 234C

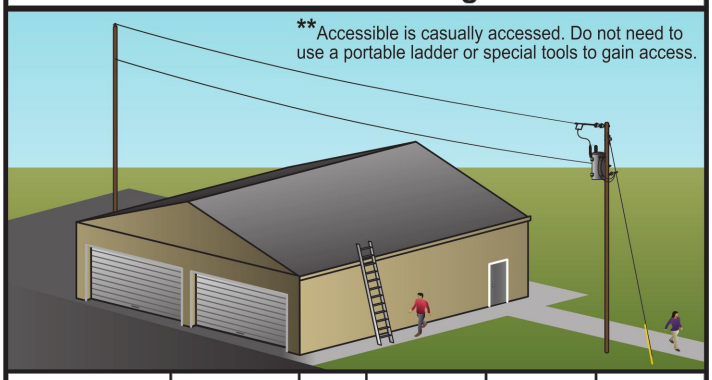

Roof	Neutral	TPX	7.2/12.5kV	14.4/25kV	19.9/35kV
Accessible**	10.5 ft	11.0 ft	13.5 ft		
Non-Accessible	3.0 ft	3.5 ft	12.5 ft		

*Largest vertical sag

Horizontal Clearance Adjacent to Buildings NESC 234C

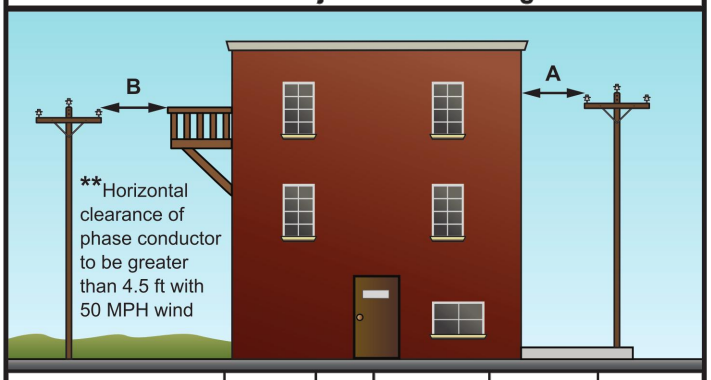

	Neutral	TPX	7.2/12.5kV	14.4/25kV	19.9/35kV
A-To Walls**	4.5 ft	5.0 ft	7.5 ft		
B - Accessible Areas**	4.5 ft	5.0 ft	7.5 ft		

SEE NESC AND OSHA FOR DETAILS AND EXCEPTIONS

DRAWING COURTESY OF HI-LINE ENGINEERING

IDAHO FALLS POWER

SERVICE POLICY
FIGURE 21
DATE MODIFIED: 2016

GROUND CLEARANCES 2017 NESC

2017 NESC GROUND CLEARANCE FOR 120/240V TRIPLEX SERVICE DROPS REFERENCE NESC TABLE 232-1 AND FOOTNOTES

CLEARANCE AT WORSE CASE FINAL SAG 32 F WITH ICE 120 F

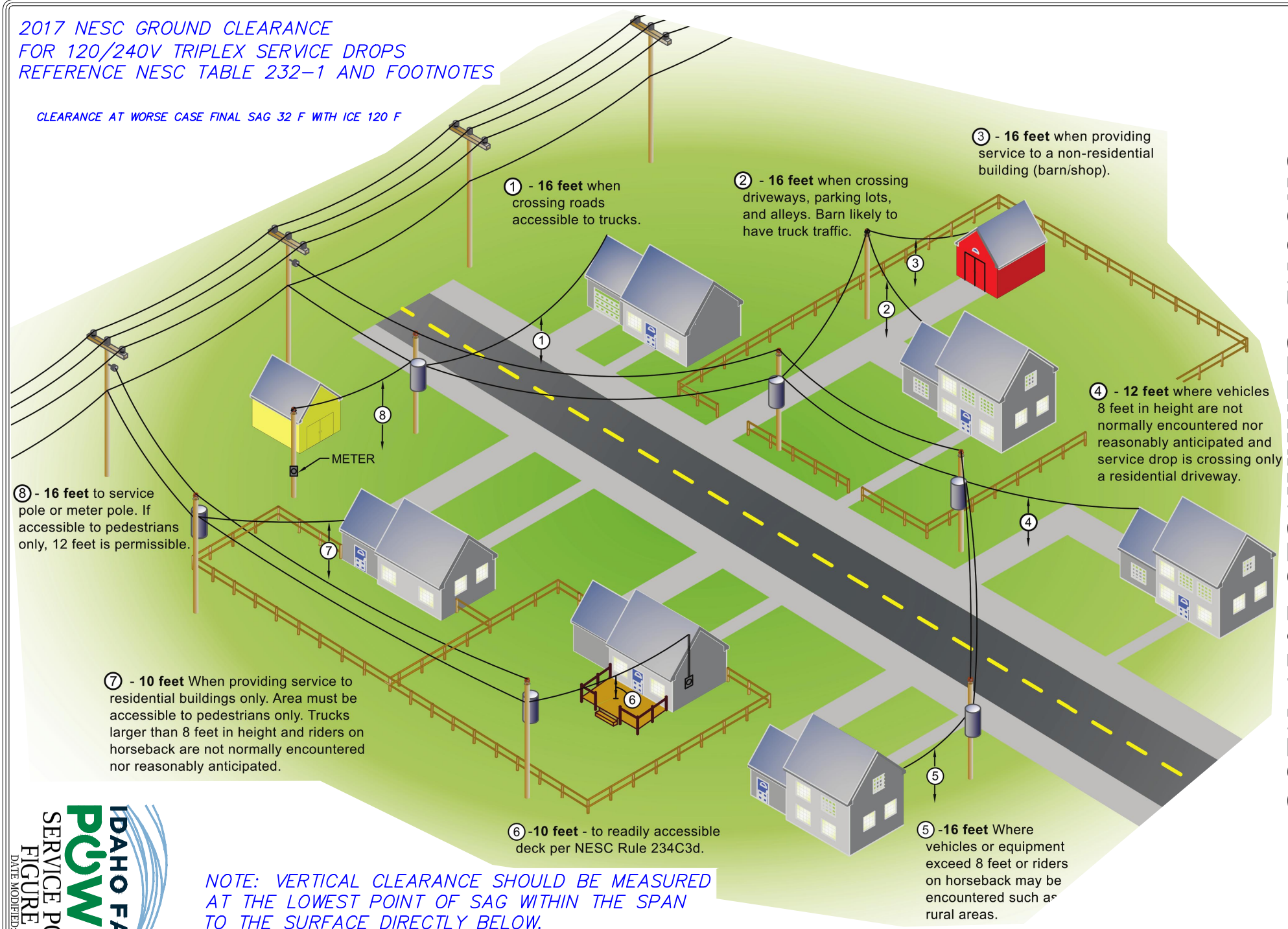

NOTE: VERTICAL CLEARANCE SHOULD BE MEASURED AT THE LOWEST POINT OF SAG WITHIN THE SPAN TO THE SURFACE DIRECTLY BELOW. TRUCKS ARE DEFINED AS ANY VEHICLE EXCEEDING 8 FEET IN HEIGHT.

DRAWING COURTESY OF HI-LINE ENGINEERING

IDAHO FALLS POWER

SERVICE POLICY
FIGURE 22
DATE MODIFIED: 2016

COMMUNICATION CABLE CLEARANCES

SUMMARY OF NESC CLEARANCES TO COMMUNICATION CABLES

SEE NESC AND OSHA FOR DETAILS AND EXCEPTIONS

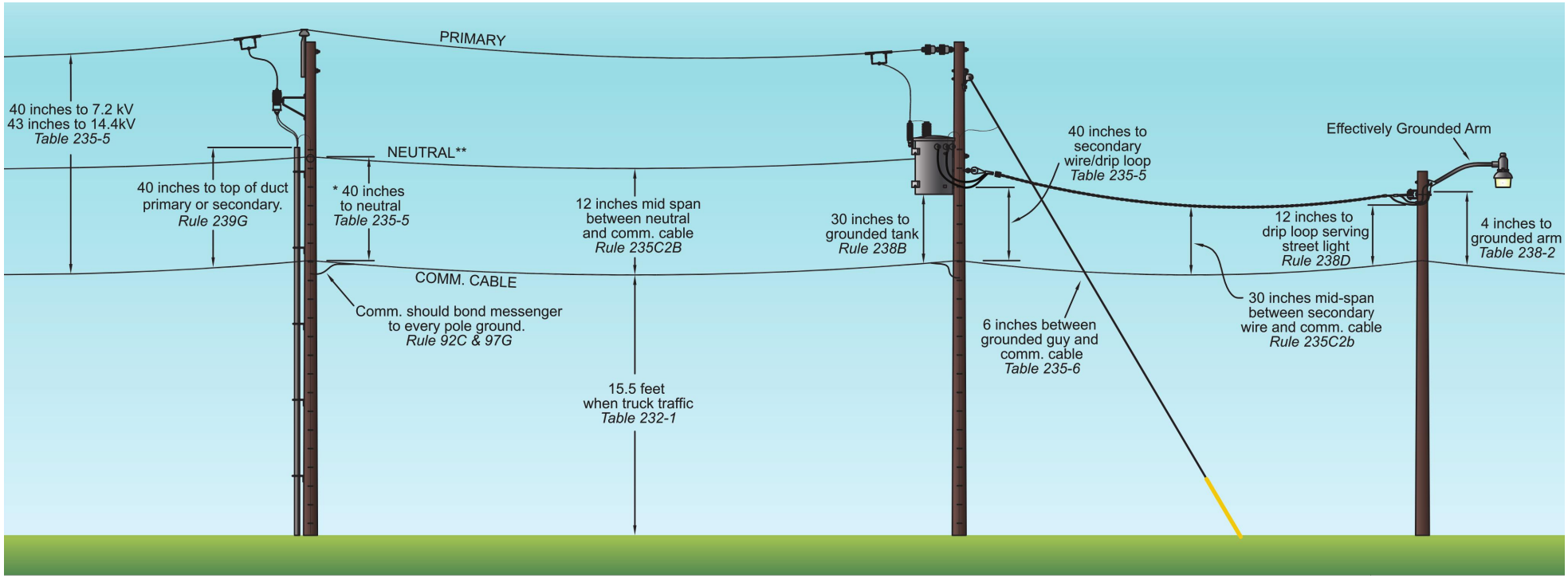

* 30 INCHES IS ALLOWED IF THE COMMUNICATION MESSENGER IS BONDED TO THE NEUTRAL THROUGHOUT THE SERVICE AREA. TABLE 235-5

** FIBER OPTIC CABLES IN THE SUPPLY SPACE (RULE 224A) WILL HAVE THE SAME REQUIRED CLEARANCE TO COMMUNICATION CABLES IN THE COMMUNICATION SPACE AS A MULT-GROUNDED NEUTRAL (RULE 235C)

A COMMUNICATION WORKER SAFETY ZONE IS 40 INCHES OF CLEARANCE BETWEEN COMMUNICATION LINES AND SUPPLY LINES / EQUIPMENT PER RULE 235C4 & 238E

DRAWING COURTESY OF HI-LINE ENGINEERING

IDAHO FALLS POWER

SERVICE POLICY

FIGURE 23

DATE MODIFIED: 2016

BOLLARD DETAIL

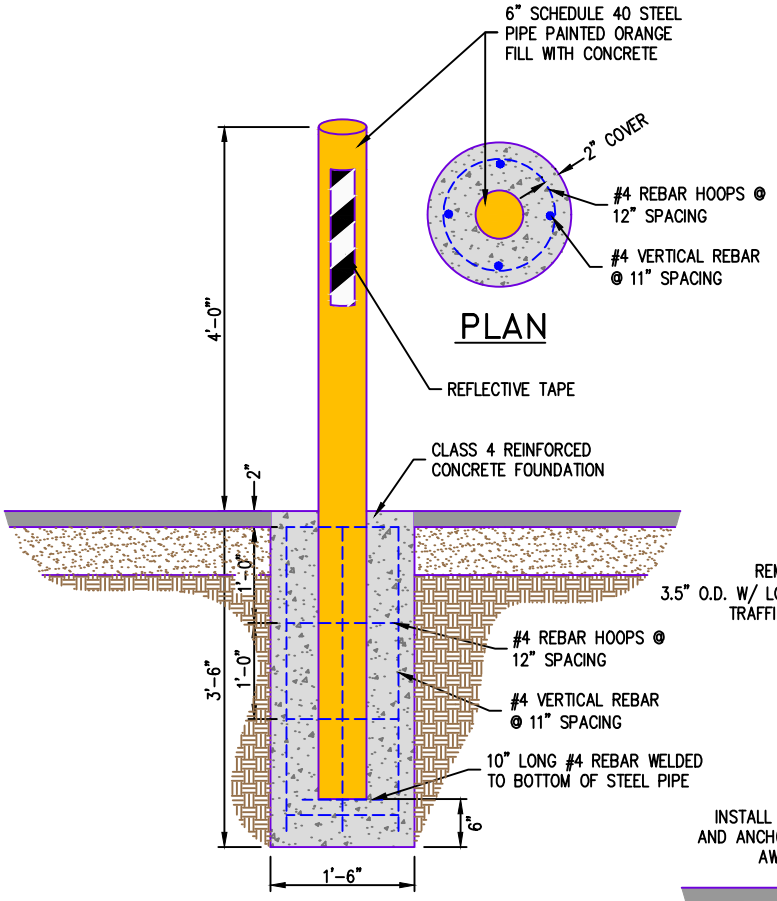

PERMANENT BOLLARD

SCALE – 1"=2'

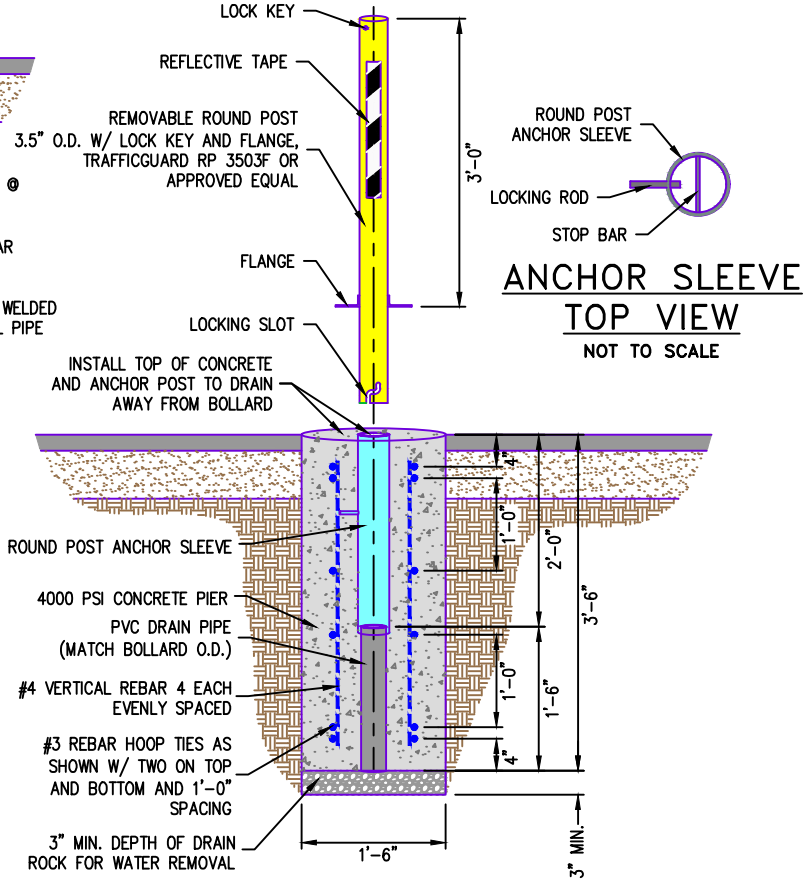

REMOVABLE BOLLARD

SCALE – 1"=2'

IDAHO FALLS POWER

SERVICE POLICY

FIGURE 24

DATE MODIFIED: 12/18/2009

ELECTRICAL VEHICLE PEDESTAL FOUNDATION PAD

(SIEMENS VERSICHARGE)

TOP VIEW

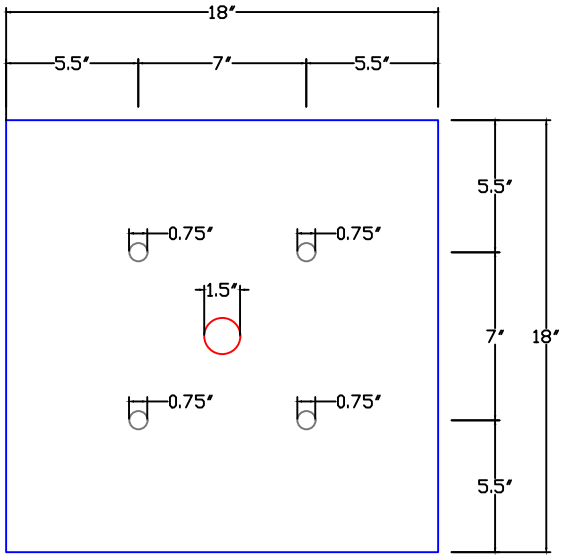

SIDE VIEW

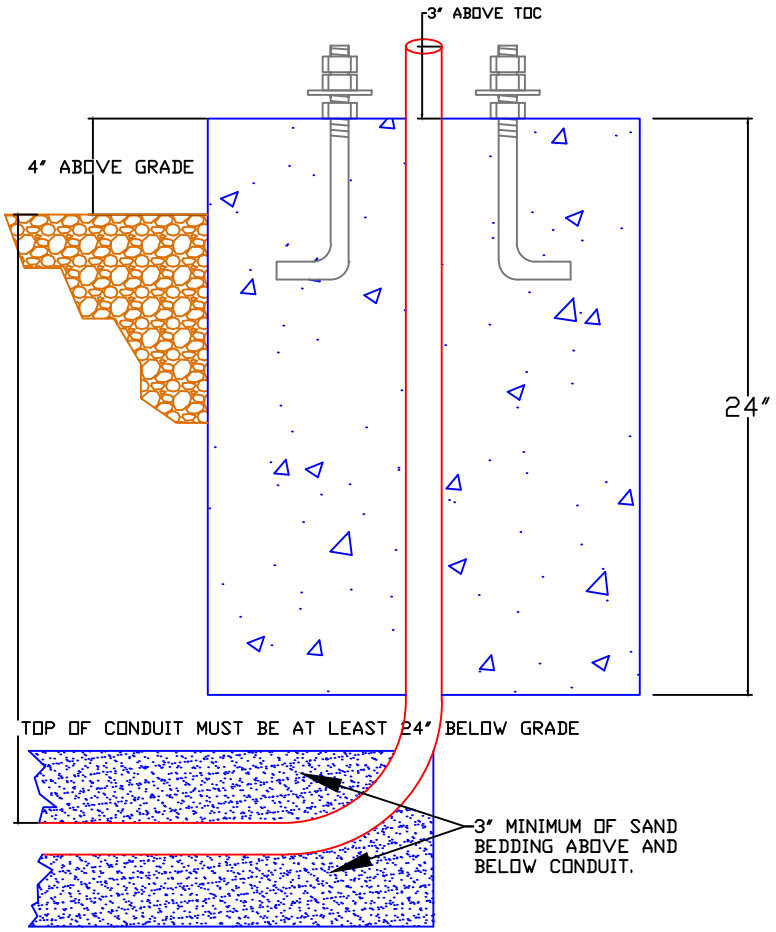

ADDITIONAL COMMENTS:

1. THIS SPECIFICATION IS FOR SIEMENS VERSICHARGE (VC30GRYU AND VCSG30GRYUW) WITH A VCPOST STATION POST.
2. INSTALL CONDUITS TO WITHIN 3" ABOVE CONCRETE PAD.
3. CONDUIT SHALL BE 1.5" DIAMETER.
4. INSTALL BELL ENDS AND CAP ALL CONDUITS.
5. THE PAD LOCATION SHALL BE COMPACTED TO A MINIMUM OF 95% OF MAXIMUM DENSITY PRIOR TO PLACEMENT OF CONCRETE.
6. THE ELECTRIC VEHICLE PEDESTAL SHALL NOT BE INSTALLED UNTIL THE CONCRETE HAS CURED A MINIMUM OF (7) DAYS. IF THE TEMPERATURE IS EXPECTED TO DROP BELOW 40°F, THERMAL BLANKETS MUST BE USED FOR A MINIMUM PERIOD OF 72 HOURS.
7. DO NOT PLACE PAD ON THE FROZEN EARTH.
8. TOP OF THE ELECTRIC VEHICLE PEDESTAL PAD SHALL BE CONSTRUCTED TO A MINIMUM OF 4" ABOVE FINISHED GRADE.
9. THE WIRE MUST PROTRUDE 72" FROM THE SURFACE OF THE CONCRETE. USE #6 AWG, 75°C COPPER WIRE TO CONNECT TO SUPPLY CIRCUIT.
10. RECOMMEND USING 4x3/8"–16 S/S L–HOOK 8" ANCHOR BOLTS. THE CENTER OF
11. THE PAD MUST BE PLACED MINIMUM 36" BEHIND THE CURB IF THERE IS NO WHEEL STOP OR MINIMUM 12" BEHIND THE CURB IF THERE IS A WHEEL STOP.
12. CONSULT ELECTRICIAN FOR TYPE OF CONDUIT TO BE USED.
13. CONSULT MANUFACTURER FOR MOUNTING AND ASSEMBLY INSTRUCTIONS.

IDAHO FALLS POWER

SERVICE POLICY
FIGURE 25

DATE MODIFIED: 01/15/2019

ELECTRICAL VEHICLE CHARGER ASSEMBLY INSTRUCTIONS

SIEMENS

Assembly Instructions

1. Make sure power to the circuit is off before beginning assembly
2. See last page for mounting the post and leveling instructions below, feed wiring through the post out of circular cutout
3. Attach the mid-panel to the enclosure using qty 4 x #10-32 X 3/8", tamper resistant screws
4. Attach the enclosure to the post using qty 3 x #10-32 X 3/8", button head socket cap screws and qty 1 x #10-32 X 3/8", tamper resistant screw, install bushing, feed wiring into the enclosure and out of the mid-panel
5. Attach the U-bracket to the mid-panel using qty 2 x #10-32 X 3/8", button head socket cap screws
6. Attach the wall mount bracket to the mid-panel using qty 2 x #10-32 X 3/8", button head socket cap screws
7. Hardwire VersiCharge (see "VersiCharge Wiring Instructions" below)
8. Slide the VersiCharge into the wall mount bracket
9. Attach the enclosure top to the enclosure using qty 2 x #10-32 X 3/8", tamper resistant screws, a padlock (sold separately) may be used to supplement connection
10. Replace four cover Phillips closure screws with qty 4 x #8-32 X 3/4", tamper resistant screws
11. Restore power, charger will turn on

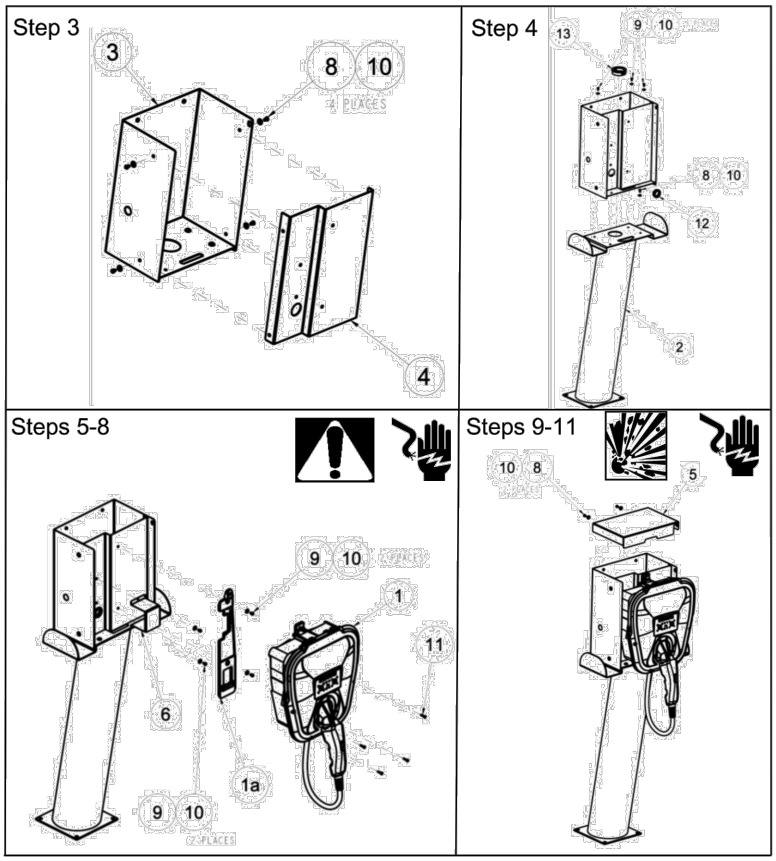

VersiCharge Wiring Instructions

Please consider all safety warnings in the VersiCharge Installation and Operation manual (document # 813776) prior to wiring. The post product is compatible with the VC30GRYU product and the VCSG30GRYUW product. To reduce the risk of fire, connect only to a circuit provided with 40 amperes maximum branch circuit overcurrent protection in accordance with the ANSI/NFPA 70 National Electrical Code. VersiCharge EV charging stations can draw up to 30A at 240 VAC, 50/60 Hz (7.2kW of power). Use 6-8 AWG, 75°C copper wire to connect to supply circuit. Refer to section 3.4 of the VersiCharge Installation and Operations Manual for instruction on removing the cord-and-plug assembly and steps for hardwired installation. Ensure breaker is off during all electrical work.

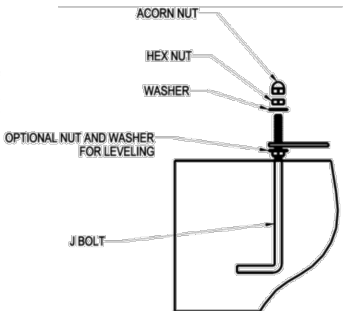

Leveling

Should the concrete pad not be level, hex nuts and washers may be placed between post and concrete pad. This method will cause a gap between the base of the post and cement, increase conduit height above cement accordingly (minimum of 3"). See next page for post mounting instructions.

© 2015 Copyright Siemens Industry, Inc.

® The National Electrical Code is a registered trademark of the National Fire Protection Association

IDAHO FALLS POWER

SERVICE POLICY
FIGURE 26
DATE MODIFIED: 06/26/2016

ELECTRICAL VEHICLE CHARGER MOUNTING INSTRUCTIONS

SIEMENS

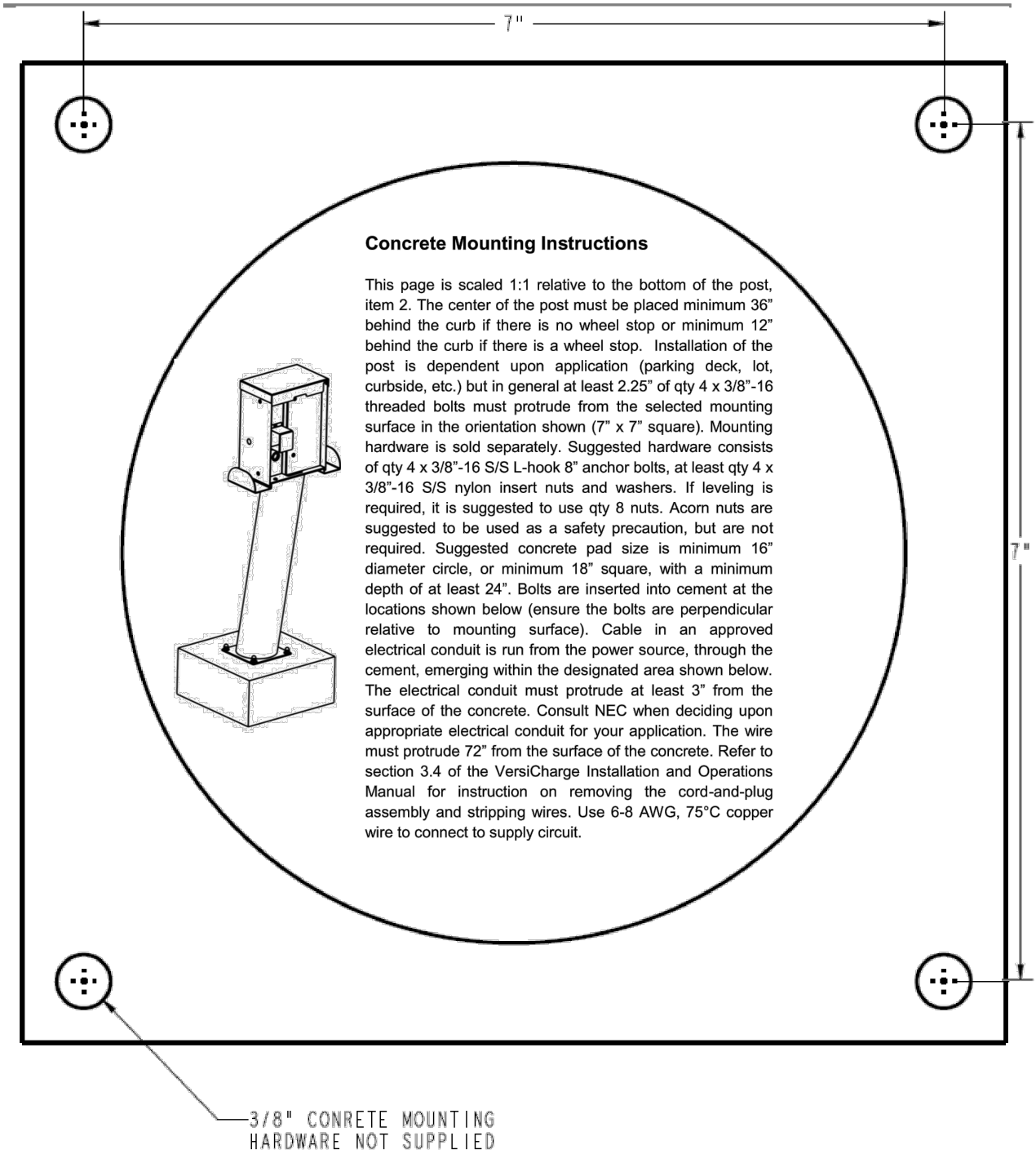

Concrete Mounting Instructions

This page is scaled 1:1 relative to the bottom of the post, item 2. The center of the post must be placed minimum 36" behind the curb if there is no wheel stop or minimum 12" behind the curb if there is a wheel stop. Installation of the post is dependent upon application (parking deck, lot, curbside, etc.) but in general at least 2.25" of qty 4 x 3/8"-16 threaded bolts must protrude from the selected mounting surface in the orientation shown (7" x 7" square). Mounting hardware is sold separately. Suggested hardware consists of qty 4 x 3/8"-16 S/S L-hook 8" anchor bolts, at least qty 4 x 3/8"-16 S/S nylon insert nuts and washers. If leveling is required, it is suggested to use qty 8 nuts. Acorn nuts are suggested to be used as a safety precaution, but are not required. Suggested concrete pad size is minimum 16" diameter circle, or minimum 18" square, with a minimum depth of at least 24". Bolts are inserted into cement at the locations shown below (ensure the bolts are perpendicular relative to mounting surface). Cable in an approved electrical conduit is run from the power source, through the cement, emerging within the designated area shown below. The electrical conduit must protrude at least 3" from the surface of the concrete. Consult NEC when deciding upon appropriate electrical conduit for your application. The wire must protrude 72" from the surface of the concrete. Refer to section 3.4 of the VersiCharge Installation and Operations Manual for instruction on removing the cord-and-plug assembly and stripping wires. Use 6-8 AWG, 75°C copper wire to connect to supply circuit.

© 2015 Copyright Siemens Industry, Inc.

® The National Electrical Code is a registered trademark of the National Fire Protection Association

IDAHO FALLS POWER

SERVICE POLICY
FIGURE 27
DATE MODIFIED: 06/26/2016

WIRELESS ANTENNA STEEL STREET LIGHT (PADMOUNTED EQUIPMENT)

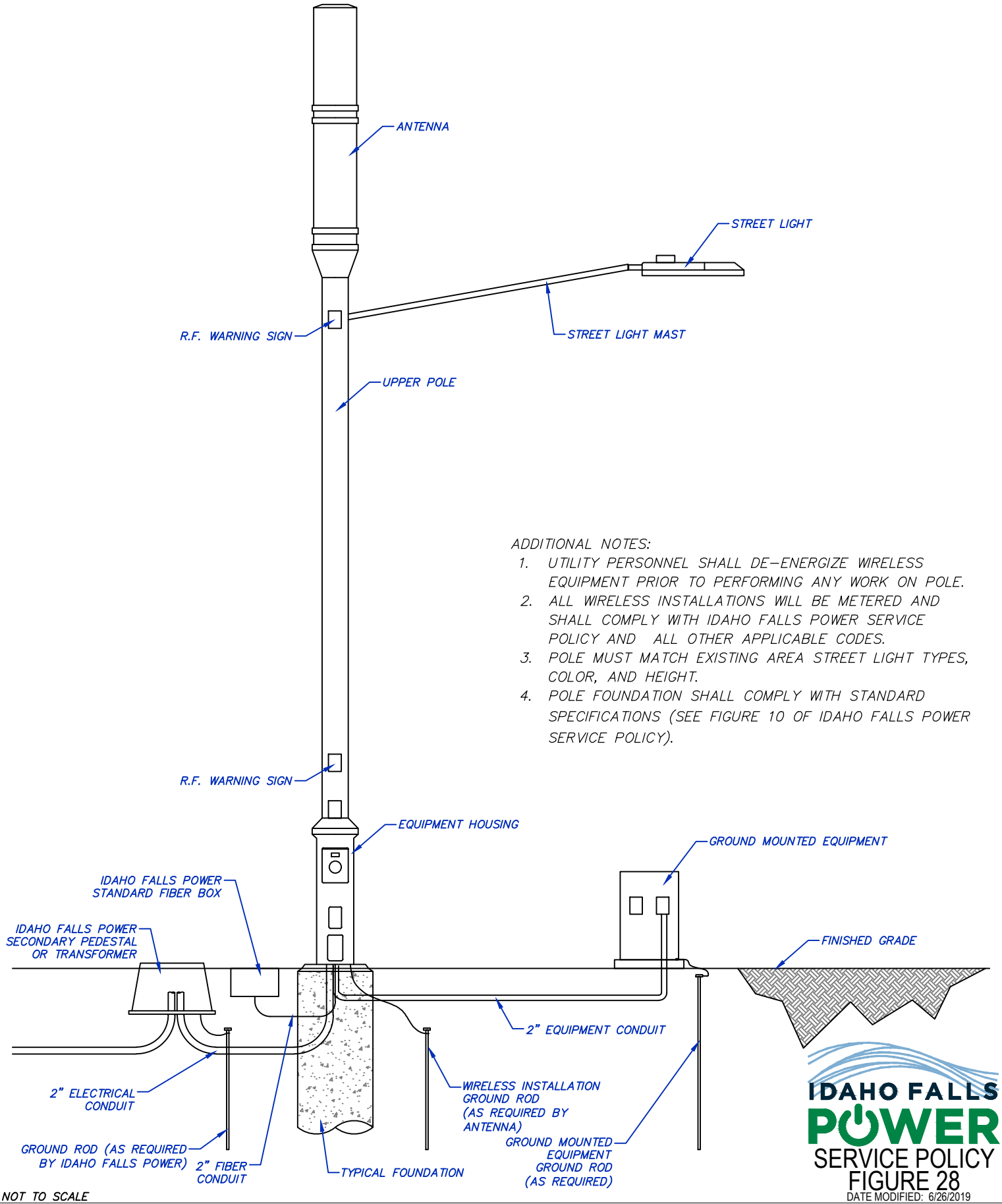

ADDITIONAL NOTES:

1. UTILITY PERSONNEL SHALL DE-ENERGIZE WIRELESS EQUIPMENT PRIOR TO PERFORMING ANY WORK ON POLE.
2. ALL WIRELESS INSTALLATIONS WILL BE METERED AND SHALL COMPLY WITH IDAHO FALLS POWER SERVICE POLICY AND ALL OTHER APPLICABLE CODES.
3. POLE MUST MATCH EXISTING AREA STREET LIGHT TYPES, COLOR, AND HEIGHT.
4. POLE FOUNDATION SHALL COMPLY WITH STANDARD SPECIFICATIONS (SEE FIGURE 10 OF IDAHO FALLS POWER SERVICE POLICY).

IDAHO FALLS POWER

SERVICE POLICY
FIGURE 28
DATE MODIFIED: 6/26/2019

WIRELESS ANTENNA
(STEEL MONO POLE)

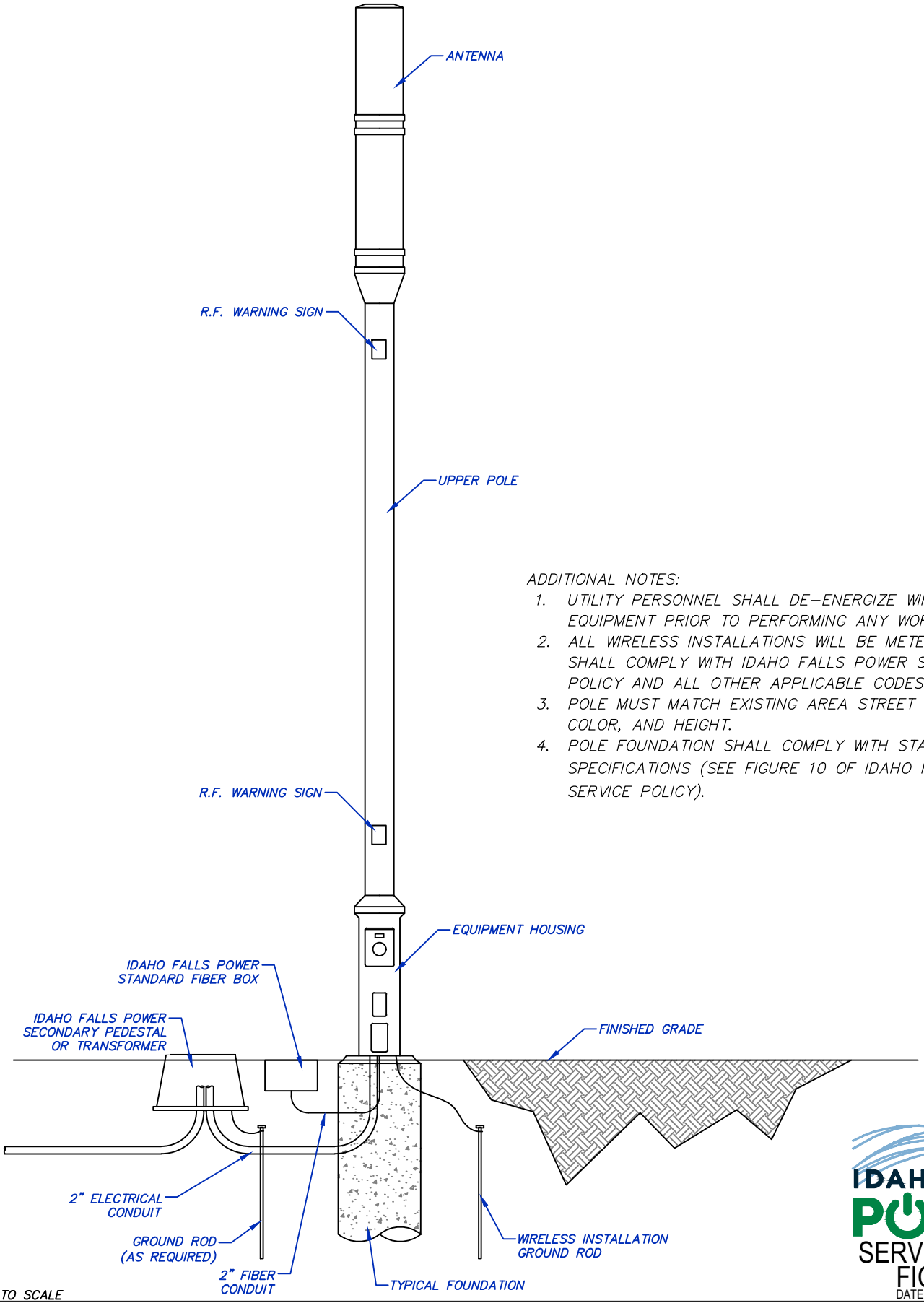

ADDITIONAL NOTES:

1. UTILITY PERSONNEL SHALL DE-ENERGIZE WIRELESS EQUIPMENT PRIOR TO PERFORMING ANY WORK ON POLE.
2. ALL WIRELESS INSTALLATIONS WILL BE METERED AND SHALL COMPLY WITH IDAHO FALLS POWER SERVICE POLICY AND ALL OTHER APPLICABLE CODES.
3. POLE MUST MATCH EXISTING AREA STREET LIGHT TYPES, COLOR, AND HEIGHT.
4. POLE FOUNDATION SHALL COMPLY WITH STANDARD SPECIFICATIONS (SEE FIGURE 10 OF IDAHO FALLS POWER SERVICE POLICY).

NOT TO SCALE

IDAHO FALLS POWER

SERVICE POLICY
FIGURE 29
DATE MODIFIED: 6/26/2019

7' X 12' VAULT

PLAN VIEW

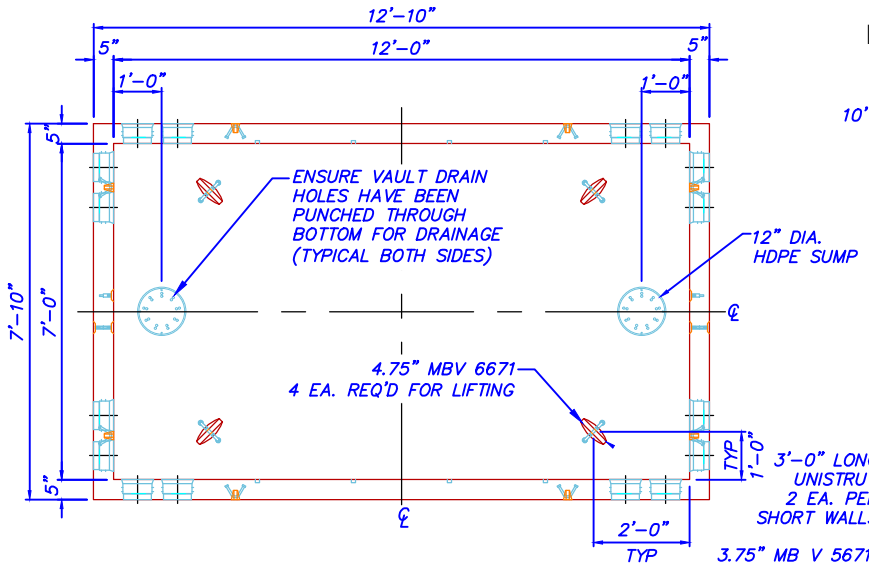

LIFTING DIAGRAM (ISOMETRIC)

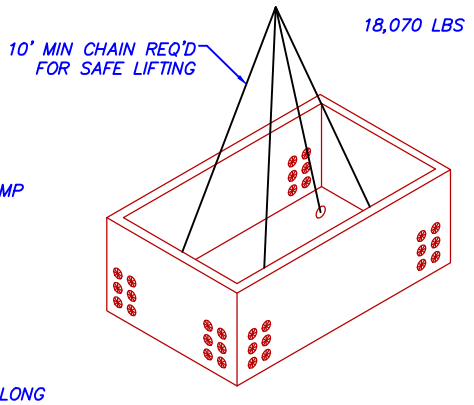

PROFILE VIEW

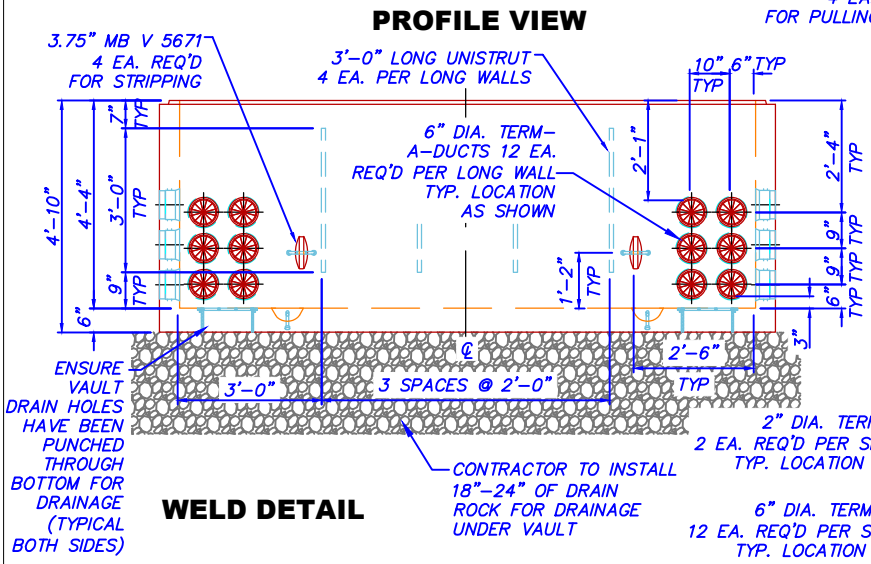

SIDE VIEW

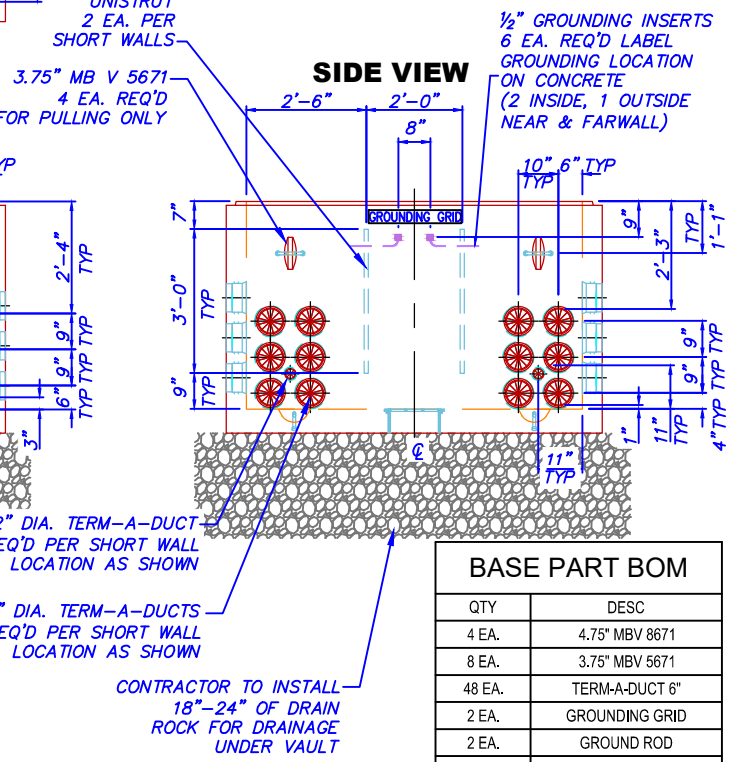

WELD DETAIL

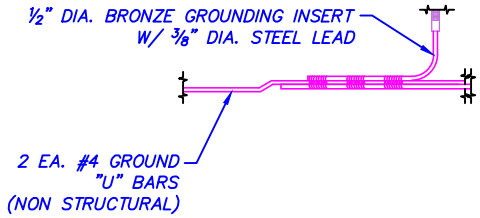

BASE PART BOM	
QTY	DESC
4 EA.	4.75" MBV 8671
8 EA.	3.75" MBV 5671
48 EA.	TERM-A-DUCT 6"
2 EA.	GROUNDING GRID
2 EA.	GROUND ROD
4 EA.	TERM-A-DUCT 2" W/ SEAL
36 FT	UNISTRUT P3200
2 EA.	SUMP W/ LID
4.25 YDS	MIX #1 SCC WETCAST
17,850 LBS	HANDLING WEIGHT

JOINT DETAIL

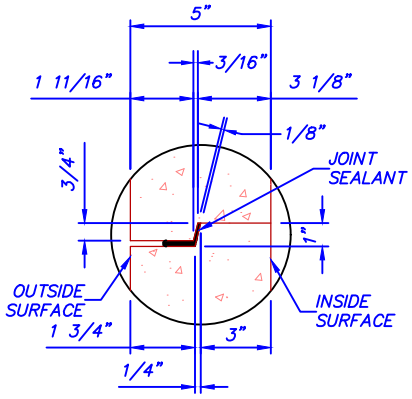

GENERAL NOTES

1. MIN. DESIGN CRITERIA PER ACI-318 CODE & AS NOTED.
2. DESIGN LOADING:
   - 2.1 300 PSF PEDESTRIAN LOAD.
   - 2.2 SOIL WEIGHT = 120 PCF
   - 2.3 DEPTH OF OVERBURDEN: 0'-0" MIN. TO 2'-0" MAX.
   - 2.4 ASSUMED WATER TABLE: 5'-0" BELOW GRADE.
   - 2.5 EQUIV. FLUID PRESSURE = 40 PCF
   - 2.6 LATERAL LIVE LOAD SURCHARGE PER CODE.
3. CONCRETE 28 DAY COMPRESSIVE STRENGTH: 5,000 PSI (MIN)
   STRIPPING STRENGTH: 2,500 PSI (MIN)
4. STEEL REINFORCING:
   BAR: ASTM A-615 GRADE 60
5. CEMENT: TYPE II/V, ASTM C-150 SPECIFICATION
   FLYASH: CLASS F, ASTM C-618 SPECIFICATION
6. CONTRACTOR TO VERIFY PROPER DRAINAGE INSIDE OF VAULT
7. CONTRACTOR TO GROUT OR SEAL AROUND EACH CONDUIT THAT EXTENDS INSIDE OF THE VAULT

DRAWING COURTESY OF OLDCASTLE INFRASTRUCTURE

NOT TO SCALE

IDAHO FALLS POWER
SERVICE POLICY
FIGURE 30
DATE MODIFIED: 12/18/2019

7' X 12' VAULT LID

PLAN VIEW

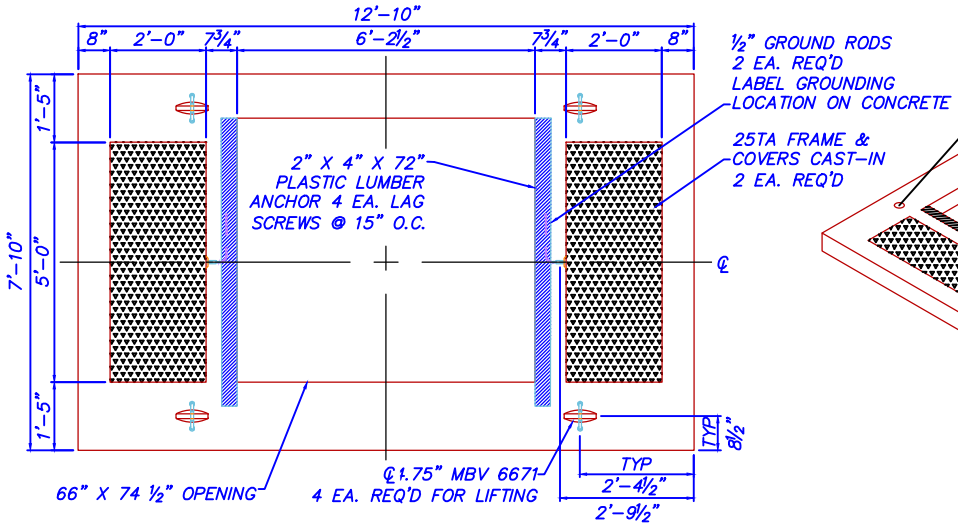

LIFTING DIAGRAM (ISOMETRIC)

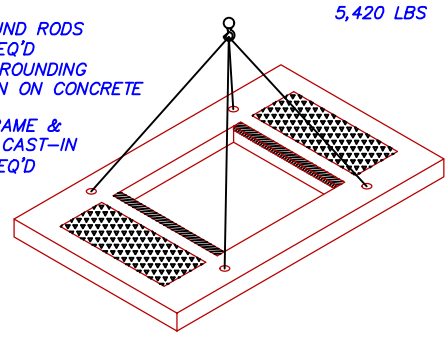

PROFILE VIEW

SIDE VIEW

JOINT DETAIL

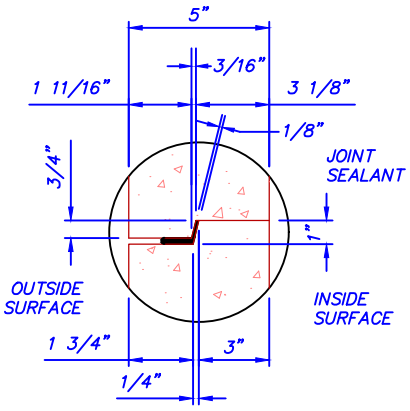

LID PART BOM	
QTY	DESC
4 EA.	4.75" MB V 6671
2 EA.	GROUND RODS
2 EA.	25 TA FRAME
2 EA.	25 TA COVER
11'-0"	PLASTIC LUMBER
1.63 YDS	MIX #1 SCC WETCAST
6,846 LBS	HANDLING WEIGHT
	#5 BAR
	#4 BAR

1. MIN. DESIGN CRITERIA PER ACI-318 CODE & AS NOTED.
2. DESIGN LOADING:
   2.1 300 PSF PEDESTRIAN LOAD.
   2.2 SOIL WEIGHT = 120 PCF
   2.3 DEPTH OF OVERBURDEN: 0'-0"
   2.4 ASSUMED WATER TABLE:
   5'-0" BELOW GRADE.
   2.5 EQUIV. FLUID PRESSURE = 40 PCF
   2.6 LATERAL LIVE LOAD SURCHARGE
   PER CODE.
3. CONCRETE 28 DAY COMPRESSIVE STRENGTH: 5,000 PSI (MIN)
4. STEEL REINFORCING:
   BAR: ASTM A-615 GRADE 60
5. CEMENT: ASTM C-150 SPECIFICATION.
6. USE STD REBAR
7. CONCRETE STRENGTH: 5,000 PSI
8. 2,500 PSI MINIMUM STRIPPING STRENGTH REQUIRED
9. CONTRACTOR TO SEAL LID TO VAULT

DRAWING COURTESY OF
OLDCASTLE INFRASTRUCTURE

IDAHO FALLS POWER

SERVICE POLICY
FIGURE 31
DATE MODIFIED: 11/21/2019

January 30, 2020 Unapproved

The Idaho Falls Power Board of the City of Idaho Falls met Thursday, January 30, 2020, at the Idaho Falls Power Conference Room, 140 S. Capital, Idaho Falls, Idaho at 8:45 a.m.

Call to Order, Roll Call, and Announcements:
There were present:
Board Member Thomas Hally
Board Member Jim Francis
Board Member Jim Freeman
Board Member John Radford
Board Member Michelle Ziel-Dingman

Absent:
Mayor Rebecca L. Noah Casper
Board Member Shelly Smede

Also present:
Bear Prairie, Idaho Falls Power (IFP) General Manager
Stephen Boorman, IFP Assistant General Manager
Randy Fife, City Attorney
Chris Fredericksen, Public Works (PW) Director
Linda Lundquist, IFP Executive Assistant

Mayor Pro Tem Ziel-Dingman called the meeting to order at 8:52 a.m. with the following items:

Calendar, Announcements, and Events Update:
Mayor Pro Tem Ziel-Dingman announced that Mayor Casper was on travel in Boise, Idaho.

Updates from Board Members:
Board Member Francis asked a question about a consent agenda item for the City Council meeting later that evening, regarding a credit given by the vendor and Board Member Freeman asked about the need for a consent agenda item that was a quote for a load bank rental for IFP. AGM Boorman explained the need for the load bank and memo.

Utility Reports:
Fiber – GM Prairie stated that the take rates for fiber were better than projected overall. AGM Boorman added that there's a need for micro-advertising where fiber is actually available.

Net Metering:
GM Prairie explained that net-metering is designed to net-out customers when they add solar and/or wind and that special meter settings with two registers is required when power is flowing in both directions. According to IFP policy, if a customer generates more energy than they consume, they will be paid back the wholesale energy rate as stated in the City fee ordinance. He added that there are limits to the size of generation and Board Member Hally asked what determines the cost? GM Prairie answered that the *Cost of Service* determines the cost. He continued to explain that the City of Idaho Falls saw a spike in solar sales in 2018 and 2019 likely due to out-of-state sales companies aggressively marketing solar power and noted that new legislation has caused some of those companies to leave the state due to increased liability for false marketing/sales claims. He said that IFP conducts free solar energy evaluations that include recommended system sizes and encourages customers to compare the report to solar companies' proposals. He continued

to say that if a customer builds an oversized system and violates the size requirement, that the utility won't pay the overage energy sales to the customer if the new service policy is adopted at the next Council meeting. This is one of the proposed changes to the service policy. Board Member Freeman asked how long a solar rooftop system lasts and GM Prairie answered that they will typically last 20 years, but likely about 14 years due the panels losing energy production as they age and new technology making it cost effective to upgrade panels.

Service Policy Review and Update:
AGM Boorman stated that the service policy is a living document and should be reviewed annually which IFP staff does. He noted that last year a section covering 5G was added and in the recent 2020 review, some clarifying language added to that section. Also included in the 2020 review, was an addition requiring external main disconnects on new residential construction. This is a safety feature where firefighters can de-energize a structure externally by themselves along with other benefits. This is also a requirement in the new 2020 electrical code that Idaho may adopt. AGM Boorman continued to say that a contractor meeting will be held in order to notify contractors of the changes. Board Member Radford asked if there is a way to notify the customer of the changes when they apply for a building construction permit? There was not general consensus with staff on how to make that happen efficiently. GM Prairie added that IFP will likely send notices with the new City requirements to local electric supply houses.

Board Policy 17-POL-01 Review and Discussion:
GM Prairie reviewed the Payment in Lieu of Taxes policy and stated that he agrees the in-kind language is complex and not needed with what we currently do in practice now. There is a lot of historical items in the current policy that add complexity and that is likely not the path we need to keep. He explained that we moved to a cleaner process years ago where it was dollars that go to the general fund based upon what the City would generally receive from a for-profit and if other departments want things done they go through Council or pay IFP for the services. He stated that he would like to discuss the percentage rate in more detail at the next meeting and we will continue to review the policy annually so the changes that we make to the policy are not set in stone forever and we can continue to improve the policy to establish fairness for the general fund and utility while maintaining discipline to stay within the bounds allowed. GM Prairie will bring a redline draft based upon this discussion to the next board meeting for review and discussion.

Traffic Signalization Enhancements:
GM Prairie led the discussion by stating that traffic signals are shown as an asset on City balance sheets and are maintained by the City and utility with departments working together on a five-year Capital Plan. PW Director Fredericksen, stated that it is very cost-effective to control how traffic moves through a city and the idea is to move from a more standard operational system to a state-of-the-art technology and in fact, there's a good percentage of traffic systems nationwide that are moving toward 24-hour reporting. He added that he has set aside $220,000 to upgrade signals and $60,000 for traffic monitoring. Additionally, there is free software available that UDOT uses and it would cost the City about $20,000 to purchase the hardware and pay for consulting support with installation. GM Prairie added that the fiber backbone in the City will allow us to have one of the most state-of-the-art traffic systems in the state. PW Director Fredericksen stated that even with 24-hour notifications, we still need to hire a traffic engineer to act on what is reporting. He said that people will call in and report failing traffic signals and that often it ends up being the detection system that is broken. He continued to explain that the current City engineer is also certified as a traffic engineer, but with growing City demands he has less and less time to respond to needed traffic work. PW Director Fredericksen added that IFP has an unfilled position that he would like to use to fill as a traffic engineering position. GM Prairie added that the traffic engineer would be an IFP employee and work in coordination with Public Works. He said that currently, IFP electricians maintain the traffic signals and

complex boxes, but a traffic engineer would consider the whole picture. He continued to explain that instead of just looking at the cameras to detect issues, a new system would continually monitor traffic and identify issues for a traffic engineer to respond to. GM Prairie mentioned that Public Works is working with the Idaho Transportation Department (ITD) to take over operation of their traffic lights and street lights for better continuity within the City and that an actionable item will be brought to City Council in the near future. Board Member Hally eluded that if a road turns into a highway that the street lights and traffic signals are probably owned by the state. PW Director Fredericksen said that public works gets maintenance calls continually from the community and ITD on their own signal issues owned/controlled by ITD, however, with the ITD plan combined with the proposal for a new system and a traffic engineer to monitor it, the City would gain control over the entire system. Board Member Radford concurred that the City's fiber capabilities are always going to help to manage traffic and asked what the lifetime of fiber is? GM Prairie answered that the fiber is made of glass and they really have not found a lifespan to the actual fiber because fiber that was laid 30 years ago is still perfectly good, so it would just be the electronics that would have to be upgraded in the system. He continued to say that IFP has the funds in the 2019/20 budget for the traffic engineer and would like a general head nod on the current plan to move forward with. There was general agreement of the Board that this plan of action is prudent.

Utility Reports:

Federal and State Regulation/Legislation – GM Prairie talked about the new fiber legislation that is working its way through the State capital and noted that it is pushing for a level playing field. He added that the buyout legislation with Rocky Mountain Power is in committee. Board Member Radford stated that IFP buyouts seem well under the million-dollar threshold, and if passed would be really helpful to the utility.

There being no further business, the meeting adjourned at 10:37 a.m.

_____ _____

Linda Lundquist, EXECUTIVE ASSISTANT Rebecca L. Noah Casper, MAYOR

IDAHO FALLS

MEMORANDUM

FROM: Pam Alexander, Municipal Services Director
DATE: Wednesday, February 5, 2020
RE: IF-20-K, Purchase Jet Truck for Public Works

Council Action Desired

☐ Ordinance ☐ Resolution ☐ Public Hearing
☒ Other Action (Approval, Authorization, Ratification, etc)

Approval to purchase one Jet Truck from the HGACBuy contract #HT06-18, a nationwide, government procurement service for a total of $247,274.31 (or take other action deemed appropriate).

Description, Background Information & Purpose

The Jet Truck will replace unit 1163, a 2009 General Motors unit scheduled for replacement. A jet truck is used to maintain the wastewater treatment plant operations.

Relevant PBB Results & Department Strategic Plan

☐ ☐ ☐ ☐ ☐ ☐ ☐ ☒

The purchase of the Jet Truck supports the reliable public infrastructure and transportation community-oriented result by replacing equipment that has reached its useful life.

Interdepartmental Coordination

Municipal Services and Public Works recommends accessing the HGAC contract #HT06-18 for this purchase.

Fiscal Impact

Funding for the Jet Truck is budgeted within the 2019/20 Municipal Equipment Replacement Fund (MERF).

Legal Review

Legal has reviewed the bid process and concurs the Council action desired is within State Statute.

SEWER EQUIPMENT CO. of AMERICA

MODEL 800 SERIES

BEST PRODUCTS, BEST LOCAL SUPPORT

SEWER EQUIPMENT CO. of AMERICA

800 TRUCK Series

Whether you are looking for a truck mounted jetter with a rotating or fixed hose reel, hydrostatic drive or auxiliary engine, eco-friendly or television features, the Sewer Equipment Company of America 800 Truck Jet Series will have the machine to help get the job done right the first time.

The Sewer Equipment Company of America's most popular truck in this series is the 800HPR-ECO, which incorporates a host of unique design features, making it the most productive, environmentally-friendly, and safest truck mounted jetter available. Add to this, a long list of available options and the 800HPR-ECO makes a perfect choice for a wide range of customers and applications..

Maximizing run time is the best way to improve the performance of your cleaning crew and the 800ECO is designed with this in mind. A single axle package with 1500 gallons of water capacity provides operators with an easy-to-maneuver package while maximizing cleaning footage between water refills. If more is better, our exclusive Duraprolene water tanks allow capacities of 2000, 3000 and 4500 gallons. With water on board, our climate controlled environmental chamber with 80,000 BTU heater keeps the pump, rear hose reel and plumbing warm during sub-freezing temperatures, keeping your crew running long after traditional jetters have been taken off the job.

The 800HPR-ECO has built-in features that support operators in the area of job safety, therefore setting it apart from its competitors. The unique construction of the Duraprolene tank includes a fully baffled interior, eliminating the dangerous surging of water when stopping or turning with thousands of pounds of water on board. Additionally, the extendable, rotating hose reel allows operators to position themselves with minimal exposure to traffic and other potential hazards. For ultimate safety, equipping your system with our wireless pendant controller will allow full control of jetting operations from up to 1500 feet away.

The exclusive ECO operating system combines the simplicity and efficiency of a PTO hydrostatic pump drive with a power plant that operates at a 33% lower RPM than traditional designs. The benefits of our ECO system extend far beyond the expectations of a "smaller carbon footprint". Trucks equipped with ECO options experience less engine wear and lower fuel consumption, saving operators time and money. The lower noise emissions produced by these units equate to heightened safety and a more pleasant work environment, as operators can more easily communicate with each other, as well as hear the traffic around them.

One of the greatest dangers facing cleaning crews today is the intrusion of utilities into sewers; particularly natural gas lines. The availability of a TV systems allows operators to positively identify such obstructions before using aggressive cleaning nozzles or root cutters. Many other options, such as a rear backup camera, various pump configurations, safety lighting packages, wash down system and toolboxes can be chosen to maximize operator safety and productivity.

These innovative features and benefits combine to make the Sewer Equipment Company of America's 800 Truck Jet Series truly the "Best In Class".

TOLL FREE 800.323.1604

MODEL 800 SERIES

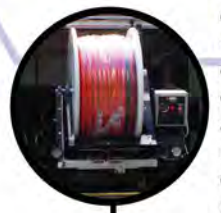

ROTATING HOSE REEL: This unique design allows for storage of the hose reel in the temperature controlled chamber when not in use. During operation, the rear roll-up door opens and the hose reel extends out and is now able to rotate a total of 190 degrees. This allows maximum access to remote manholes, reduces operator fatigue, as well as minimizes operator exposure to "high traffic zones".

CLIMATE CONTROLLED ENVIRONMENTAL ENCLOSURE: Our unique, heated enclosure allows safe operation in temperatures well below freezing without worries of damaged pumps or plumbing. With a fully-welded one piece steel or all aluminum construction available, your truck will stil look great inside and outside after years of exposure to the elements. Regardless of your climate, the locking roll up doors offer unequalled security for your truck and the equipment you carry to your job site.

ECO OPERATING PLATFORM: Operating at 35% lower RPM's than the competition, the 800 Series Truck Jet consumes considerably less fuel than traditional designs, adding to your bottom line each year. Perhaps more importantly, low RPM's equate to low noise emissions. Complaints from residents are minimized, and operators recognize a higher level of safety when they can hear each other and the traffic around them.

OPERATOR CONTROL STATION: After simply parking the truck in neutral and engaging the parking brake, all jet functions are controlled from the operator control station via four switches moving from left to right:

1. Work Mode - ON
2. Water Valve - ON
3. Jet - ON
4. Throttle - ON

All controls are housed in a NEMA-4 watertight box with washdown rated switches and gauges. All wiring is color coded and each manual contains a wiring diagram specific to your truck's serial number.

DURAPROLENE WATER TANKS: Our exclusive Duraprolene™ water tank design has a multitude of benefits. Unlike aluminum or steel, Duraprolene is 100% immune to long term damage caused by water and deicers, such as magnesium chloride and common road salt. The square design holds more water per linear foot than round tanks, which is a major key to building a truck with a 1500 gallon water capacity that is under 23' in length. With driver safety in mind, each tank is fully baffled to eliminate water surge while turning and stopping.

BEST PRODUCTS, BEST LOCAL SUPPORT

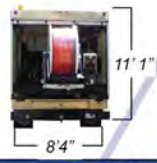

MODEL	LENGTH	WIDTH	HEIGHT	STANDARD WATER CAPACITY	AXLE CONFIGURATIONS	MAX HOSE CAPACITY	HOSE SIZE
800-HPR	22' 6"	8'4"	11' 1"	1500 gallon	Single or Tandem Axle	1000'	1/2" - 1"

MODEL	LENGTH	WIDTH	HEIGHT	STANDARD WATER CAPACITY	AXLE CONFIGURATIONS	MAX HOSE CAPACITY	HOSE SIZE
800-HPRTV	22' 6"	8'4"	11' 1"	1500 gallon	Single or Tandem Axle	1000'	1/2" - 1"

MODEL	LENGTH	WIDTH	HEIGHT	STANDARD WATER CAPACITY	AXLE CONFIGURATIONS	MAX HOSE CAPACITY	HOSE SIZE
800-H	22' 6"	8'4"	11' 1"	1500 gallon	Single or Tandem Axle	1000'	1/2" - 1"

MODEL	LENGTH	WIDTH	HEIGHT	STANDARD WATER CAPACITY	AXLE CONFIGURATIONS	MAX HOSE CAPACITY	HOSE SIZE
800-HF	26'6"	8'4"	11'1"	1500 gallon	Single or Tandem Axle	1000'	1/2" - 1"

MODEL	LENGTH	WIDTH	HEIGHT	STANDARD WATER CAPACITY	AXLE CONFIGURATIONS	MAX HOSE CAPACITY	HOSE SIZE
800-A	22' 6"	8'4"	11' 1"	1500 gallon	Single or Tandem Axle	1000'	1/2" - 1"

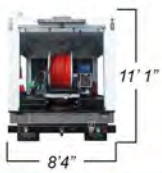

MODEL	LENGTH	WIDTH	HEIGHT	STANDARD WATER CAPACITY	AXLE CONFIGURATIONS	MAX HOSE CAPACITY	HOSE SIZE
800-APR	24'6"	8'4"	11'1"	1500 gallon	Single or Tandem Axle	1000'	1/2" - 1"

TOLL FREE 800.323.1604

MODEL 800 SERIES

	800-HPR/ECO	800-HPRTV/ECO	800-H/ECO	800-HF/ECO	800-A	800-APR
Engine & Pump						
Triplex Plunger Water Pump w/ 30 Minue Run-Dry: 65gpm @ 2000psi	S	S	S	S	S	S
Auxiliary Diesel Engine					S	S
Hydrostatic Drive via World Trans	S	S	S	S		
30 Gallon Fuel Tank for Auxiliary Engine					O	O
80gpm @ 2000psi	O	O	O	O		
75gpm @ 2500psi	O	O	O	O		
55gpm @ 3000psi	O	O	O	O		
80gpm @ 2000psi & 122hp Diesel Engine					O	O
75gpm @ 2500psi & 137hp Diesel Engine					O	O
55gpm @ 3000psi & 122hp Diesel Engine					O	O
3000psi Sewer Hose	O	O	O	O	O	O
Upgrade to Single Piston Pump 65gpm @ 2500psi	O	O	O	O		
Upgrade to Single Piston Pump 80gpm @ 2500psi	O	O	O	O		
Accumulator for Single Piston Pump	O	O	O	O		
Upgrade to Environmental Friendly Hydraulic Fluid	O	O	O	O		
Hose Reel & Hose						
Rear-Mounted Safety Hose Reel 700' x 1" Hose capacity	S					S
Front-Mounted Safety Hose Reel 700' x 1" Hose capacity				S		
Rear-Mounted Fixed Hose Reel 700' x 1" Hose capacity			S		S	
Dual Telescoping Reel: Reel A- Rotating Safety Reel with 500' @ 2500psi Umbilical Hose Reel B- Rotating Safety Reel with 600' of 1" @ 2500psi Sewer Hose		S				
TV System						
Self-Leveling Color TV Camera		S				
4" Jet Pod Skid		S				
Color Monitor		S				
DVR with Removable SD Card		S				
Additional Self-Leveling Camera Head		O				
Additional 4" Jet Pod for Camera		O				
Jet Pod Skids from 6"-18"		O				
Truck						
Mounting to Approved Chassis	S	S	S	S	S	S
Mud Flaps	S	S	S	S	S	S
Bumper	S	S	S	S	S	S
Hitch Receiver	S	S	S	S	S	S
Tank & Fill System						
1000 Gallon Water Tank	O	O	O	O	O	O
1500 Gallon Duraprolene Water Tank	S	S	S	S	S	S
2000 Gallon Duraprolene Water Tank	O	O	O	O	O	O
2500 Gallon Duraprolene Water Tank	O	O	O	O	O	O
3000 Gallon Duraprolene Water Tank	O	O	O	O	O	O
10'x6" Low Profile 1500 Gallon Water Tank	O	O	O	O	O	
2.5" Fill System	S	S	S	S	S	S
Fill Hose Storage Rack	O	O	O	O	O	O
Tank Access Ladder	O	O	O	O	O	O
Duraprolene Water Tank Warranty for 7- 10 years	O	O	O	O	O	O
Lighting						
D.O.T. Approved LED Lighting	S	S	S	S	S	S
Compartment Lighting	O	O	O	O	O	O
LED Flood Light	O	O	O	O	O	O
LED Rotating Beacon	O	O	O	O	O	O
LED Strobe Light	O	O	O	O	O	O
LED Arrow Stick	O	O	O	O	O	O
LED Arrow Board	O	O	O	O	O	O
Handheld Wireless Spotlight	O	O	O	O	O	O

	800-HPR/ECO	800-HPRTV/ECO	800-H/ECO	800-HF/ECO	800-A	800-APR
Rear Compartment						
Lighted NEMA 4 control panel	S	S	S	S	S	S
Tachometer & Hour Meter	S	S		S	S	S
Tachometer	S	S	S	S	S	S
Hour Meter	S	S	S	S	S	S
Air Purge Valve	S	S	S	S	S	S
Recirculation System	S	S	S	S	S	S
Painted Steel Shroud (3 Roll-Up Doors)	S	S				S
Painted Steel Shroud (2 Roll-Up Doors)			S	S	S	
Hydraulically Powered Rotating Hose Reel	O	O		O		
Automatic Level Wind with Hydraulic Up/Down Action	O	O	O	O		
Additional Control Panel (Street Side)				O		
Digital Smart Counter	O	O	O	O	O	O
Smart Counter (for Dual Reel)	O	O	O	O	O	O
Footage Meter (Mounted to Jet Hose Reel)	O	O	O	O	O	O
Footage Meter (Mounted on Manual Level Wind)	O	O	O	O	O	O
Drain Valves for Water Pump	O	O	O	O	O	O
Hydraulic Manifold Reel Control	O	O	O	O	O	O
Manual Diverter Valve	O	O	O	O		O
Hydraulic Tool Circuit	O	O	O	O	O	O
Upgrade to 1000' Capacity Hose Reel	O		O	O	O	O
Sewer Hose 1" x 2500psi	O		O	O	O	O
Sewer Hose 1" x 3000psi	O		O	O	O	O
Sewer Hose 3/4" x 2500psi	O		O	O	O	O
Sewer Hose 3/4" x 3000psi	O		O	O	O	O
Sewer Hose 5/8" x 4000psi	O		O	O	O	O
Sewer Hose 1/2" x 4000psi	O		O	O	O	O
25'x1" Leader Hose	O	O	O	O	O	O
Lateral Line Cleaning Kit	O	O	O	O	O	O
50' Wash Down System	O	O	O	O	O	O
Upgrade to Aluminum Shroud	O	O	O	O	O	O
80,000 BTU Heater	S	S	S	S	S	O
Dual Reel						
Dual Reel System Capacity as follows: 400' x ¾", 700' x 5/8", 900' x ½"	O		O		O	O
Automatic Level Wind with Hydraulic Up/Down Action	O					
Pendant Controls						
Basic Pendant	O	O	O	O	O	O
Standard Pendant	O	O	O	O	O	O
Master Pendant	O	O	O	O	O	O
Wireless Pendant	O	O	O	O	O	O
Truck Mounting and Tool Storage						
Air Purge System	O	O	O	O	O	O
Hydrostatic Front Crankshaft	O	O	O			
Rear Gauge Cluster	O	O	O	O	O	O
Spray Bar (Front Frame Mounted)	O	O	O	O	O	O
Fixed Overhead Canopy	O	O		O		
Steel Skirting and Steel Toolboxes	O	O	O	O	O	O
Steel Skirting and Aluminum Toolboxes	O	O	O	O	O	O
Skirting Only	O	O	O	O	O	O
Long Handled Tool Storage	O	O	O	O	O	O
Long Handled Tool Storage Tray			O		O	O
Roll-Out Root Cutter Maintenance Box	O	O	O	O	O	O
Roll-Out Root Cutter Maintenance Box with Electric Pump	O	O	O	O	O	O
Rear Back-Up Camera System	O	O	O	O	O	O
Reese Style Hitch	O	O	O	O	O	O
Combination Heavy Duty Ball Hitch	O	O	O	O	O	O
(6) 18" D.O.T. Safety Cones and Holder	O	O	O	O	O	O

Legend	
Standard	S
Optional	O

BEST PRODUCTS, BEST LOCAL SUPPORT

SEWER EQUIPMENT CO. of AMERICA

800 Series Hose Reel

Sewer Equipment has been a leading manufacturer in the sewer cleaning industry for many years and when it comes to new equipment technology, we are always developing innovative ways to address the concerns and needs of our customers. Sewer Equipment holds a patent for the extendable/rectractable hose reel. This feature of our hose reel, paired with its ability to rotate 190 degrees and a number of other features, makes the Model 800-HPR the best jetting truck for your application.

HOSE REEL RETRACTED

190 Degree Rotation: The 800-HPR series offers a hose reel that rotates 190 degrees and locks at every two inch interval. This allows operators to set up the machine directly facing the manhole, while remianing out of the path of traffic, increasing safety for and effectiveness of the operator.

Extension/Retraction: The hose reel extends in and out of the shroud by means of a hydraulic cylinder, resulting in smooth and reliable movement of the hose reel.

Strong Bearing: Like a house, your hose reel needs a strong foundation. We mount our hose reel on an industrial bearing rated at 5,000 pounds for security and stability.

Hose Reel Construction: Sewer Equipment offers 1 1/2" rolled flanges as standard equipment on all hose reel asssemblies in order to eliminate the possiblity of the sewer hose being cut while interfacing with the hose reel. This design also increases the structural integretity of the hose reel side.

Automatic Level Wind: Exclusive to Sewer Equipment machines, the automatic level wind provides hydraulic up/down action which allows operators to access hard-to-reach manholes by raising and lowering the level wind to properly align the sewer hose with the manhole. This feature coupled with the rotating reel, will give any operator better alignment with the manhole.

HOSE REEL EXTENDED

TOLL FREE 800.323.1604

WHY A JETTING TRUCK WITH TELEVISING CAPABILITIES?

PRODUCTIVITY

Make your truck jet a true multi-purpose piece of equipment. With the Model 800-HPRTV, there is no more waiting around for a camera truck and crew when you hit an obstruction in the line. Your operator can utilize the televising capabilities of the 800-HPRTV to diagnose the issue on the spot and even go so far as document the obstruction or event, depending on the truck platform you choose.

LESS CAPITAL INVESTMENT REQUIRED

No need to purchase a camera truck and jetting truck, when you can have two funtions in one truck. You will require a smaller crew, as fewer operators are needed to run one truck equipped with both jetting and televising capapabilities.

ECO FRIENDLY FOOTPRINT

With the Model 800HPRTV or Crew you can decrease your physical footprint by having only one truck that can perform both televising and jetting functions, and not requiring the use of separate camera truck and jetting truck.

WHICH MODEL IS A FIT FOR YOUR APPLICATION?

Model 800-HPRTV

System: Integral to the 800-HPR, this system is powered by Cues and comes complete with a self-leveling straight-view camera, color monitor, keyboard, footage counter and SD storage card. All components are housed in a weather-rated enclosure, located at the jetting operator station.

Functionality The 800-HPRTV platform allows the operator to evaluate a line for blockages, general pipe conditions and the like. While this system will not replace a fully-equipped camera truck, it will improve your cleaning crew's productivity instantly.

Model 800-HPRTV*CREW*

System: The "Crew" platform allows you to outfit your jetting truck with the camera system of your choice. We provide a base adjacent to the jet hose on which to mount the system you choose. In addition, the truck can be configured to accommodate an extended cab chassis, which allows the space for your camera operator's mobile office.

Functionality: This platform allows for a level of evaluation beyond that of the HPRTV configuration. Depending on the type of equipment you choose, your operator can not only evaluate line conditions, but can do your PACP documentation using only one unit.

SEWER EQUIPMENT CO. of AMERICA

Revised 05/17
Contents are copyrighted by Sewer Equipment Company of America

Products subject to change without notification.
Actual products may not be an exact match to product as shown.

800.323.1604
www.sewerequipment.com

IDAHO FALLS

MEMORANDUM

FROM: Pam Alexander, Municipal Services Director

DATE: Wednesday, February 5, 2020

RE: RFQ 20-071, Elevator Upgrade at the Gem State Hydroelectric Plant

Council Action Desired

☐ Ordinance ☐ Resolution ☐ Public Hearing

☒ Other Action (Approval, Authorization, Ratification, etc)

Accept and approve the sole submission received from Kone for a total of $180,040.76 (or take other action deemed appropriate) to upgrade the elevator at the Gem State Hydroelectric Plant.

Description, Background Information & Purpose

This project is to upgrade a 1987 Otis elevator at the Gem State Hydroelectric Plant with current parts and materials for elevator operation safety and efficiencies.

Relevant PBB Results & Department Strategic Plan

☐ ☐ ☐ ☐ ☐ ☒ ☐ ☒

The upgrade of the elevator supports the safety and secure community and the reliable public infrastructure community-oriented results by upgrading city infrastructure that has reached its useful life.

Interdepartmental Coordination

Municipal Services and Idaho Falls Power coordinated the issuance and evaluation of the Request for Qualification (RFQ) for this project.

Fiscal Impact

Funds for the elevator upgrade project are budgeted within the Idaho Falls Power 2019/20 Gem State Generation construction work orders budget.

Legal Review

Legal has reviewed the RFQ process and sole submission for this project and concurs the council action desired is within State Statute.

Dedicated to People Flow™ KONE

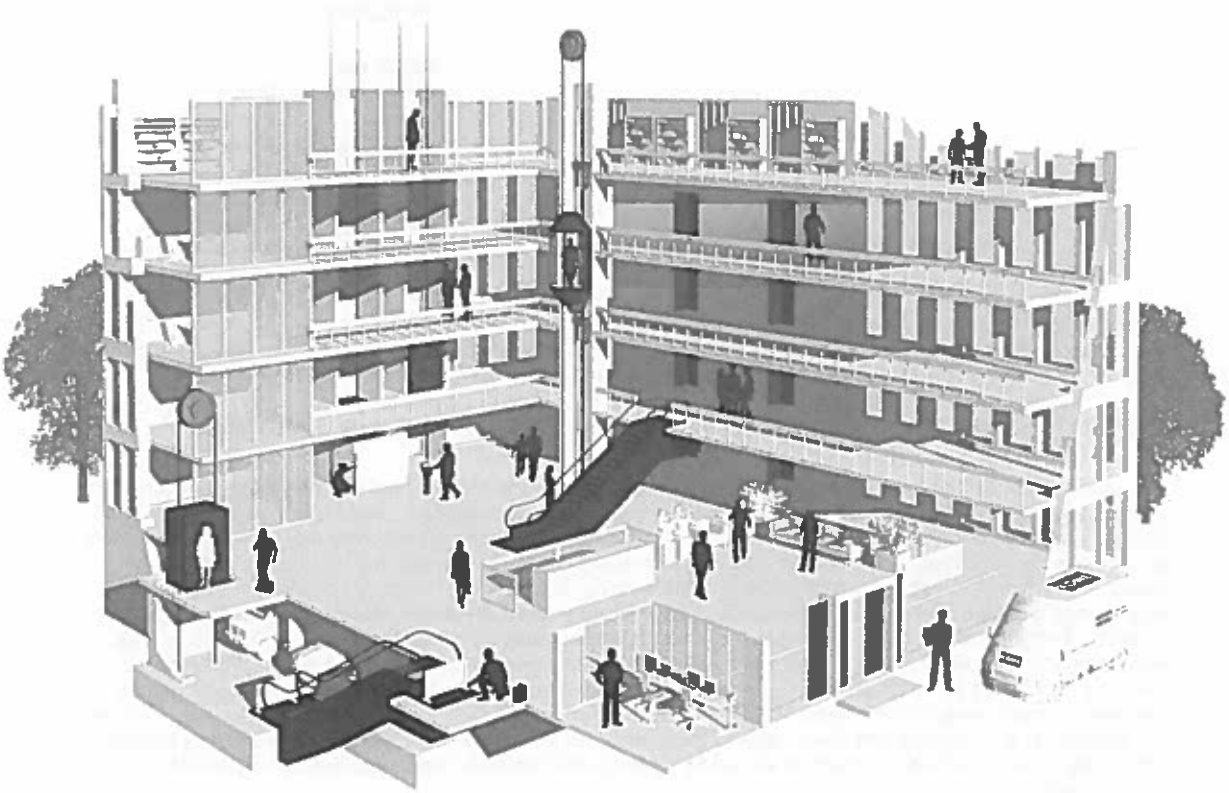

KONE People Flow - Solution for You

- Eco-efficient
- Reliable
- Attractive

01/16/2020

01/16/2020

KONE Inc.
Elevators & Escalators

9695 South Sandy Parkway
Sandy, Utah, 84070
Mobile +18012328024
Work +18019771144
tyson.guthrie@kone.com
www.kone.us

Dear Lisa Lathouris,
We are pleased to enclose, for your review and consideration, KONE's proposal to modernize your equipment located at the following address for the amount of **$180,040.76** (incl. use tax):

GEM STATE HYDRO ELECTRIC PLANT, 8635 SOUTH 3500 WEST, IDAHO FALLS, IDAHO, 83405

It is important to highlight that we are proposing some changes to the scope of work / Specifications of this bid due to our recent findings during our internal engineering due diligence process. After receiving the job layouts from the original manufacturer of this job, we learned that the size of gearless machine that would be needed to support this equipment wont fit in the existing machine room and wont align with the drop points of the hoist ropes. It would require extensive restructuring of the existing machine room. Also, we confirmed with our engineering team that there is no performance or operational improvement with changing from a geared to a gearless machine considering how large this elevator is. We extensively evaluated the overall condition of all the elevator system components and found the machine is in great condition and we would actually recommend retaining the current geared machine. Our engineering team stated that the life cycle of this particular geared machine is approximately 50-60 years. The controller, AC motor, governor, fixtures, door operator, etc. – are all still included in our proposal and have reached there expected life cycle of 30 years (this elevator was installed in 1987). We strongly believe the machine should be retained until the next time this elevator is in need of modernization.

Please review the scope of work within this proposal. I have met the specifications of the RFP with exception to removing the machine related components from the scope of work. For clarification, the areas of scope removed from my bid that were included in the RFP are as follows:

-AC Gearless Machine
-Compensation
-Deflector Overhead Sheave
-Card Reader Provisions

Should you have any questions or require additional information, please feel to contact me directly. Please know that we are available to assist you in coordinating the work by others as further described in our "Bid Attachment B".

We look forward to hearing from you and working together on this project.

Yours sincerely,

Tyson Guthrie
Sr. Sales Consultant
KONE Inc.

DETAILED SPECIFICATION

20242400 / - 8635 SOUTH 3500 WEST

Door Panels

New car door panel(s) shall be provided where applicable. New door(s) shall be UL fire rated 1 1/2 hour.

Number of floors served	5
Car Panel Finishing Material	New car door panel(s) shall be provided where applicable. New door(s) shall be UL fire rated 1 ½ hour. Finish will be #4 stainless steel.
Door type	Two speed side opening
Door width [in]	48
Door Height (Inches)	84
Qty of sets of Car door panel (per car)	1

ReNova Door

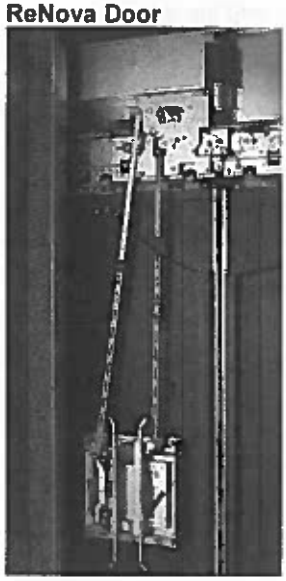

A closed loop permanent magnet PWM high-performance door operator shall be provided to open and close the car and hoistway doors simultaneously. Door movement shall be cushioned at both limits of travel. An electric contact shall be provided on the car at each car entrance to prevent the operation of the elevator unless the car door is closed. The door operator shall be arranged so that, in case of interruption or failure of electric power, the doors can be readily opened by hand from within the car, in accordance with applicable code.

Emergency devices and keys for opening doors from the landing shall be provided as required by the local code. Doors shall open automatically when the car has arrived at or is leveling at the respective landings. Door shall close after a predetermined time interval or immediately upon pressing of a car button. A door open button shall be provided in the car. Momentary pressing of this button shall reopen the doors and reset the time interval. Door hangers and tracks shall be provided for each car door. Tracks shall be contoured to match the hanger sheaves. The hangers shall be designed for power operation with provisions for vertical and lateral adjustment. Hanger sheaves shall have polyurethane tires and pre-lubricated sealed-for-life bearings.

Number of floors served	5
Hoistway NEMA Rating	Hoistway rating is NEMA 1.
Front/rear entrances	Front entrances only
Number of front openings	5
Door type	Two speed side opening
Door width [in]	48

Curtain of Light

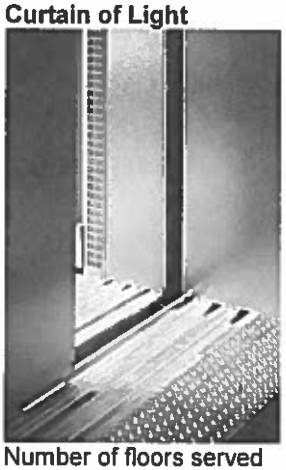

The elevator car shall be equipped with an electronic protective device extending the full height of the car. When activated, this sensor shall prevent the doors from closing or cause them to stop and reopen if they are in the process of closing. The doors shall remain open as long as the flow of traffic continues and shall close shortly after the last person passes through the door opening.

Number of floors served	5
Hoistway NEMA Rating	Hoistway rating is NEMA 1.
Front/rear entrances	Front entrances only

Resolve 400

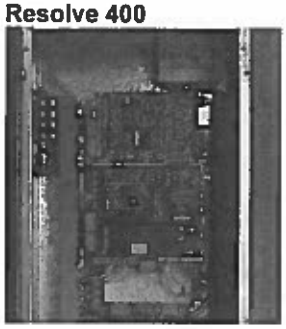

KONE ReSolve 400 is a modular modernization solution for elevator control and electrical systems, based on the latest in control technology. This replaces outdated technology such as relays and older electronic systems, improving the levels of performance, reliability, safety and energy efficiency of your elevator. The modular structure of KONE ReSolve is designed to correctly interface with many types of existing elevator components, thus ensuring a swift, trouble-free installation for the building users.

A new microprocessor-based control system shall be provided to perform the functions of safe elevator motion. Included shall be all of the hardware required to connect, transfer and interrupt power, and to protect the motor against overloading. Each controller cabinet containing memory equipment shall be properly shielded from line pollution. The microcomputer system shall be designed to accept reprogramming with minimum system down time. All high voltage (110V or above) contact points inside the controller cabinet shall be protected from accidental contact in a situation where the controller doors are open. The microprocessor-based control system shall utilize on-board diagnostics for servicing, trouble-shooting, and adjusting without requiring the use of an outside service tool.

Provide a ReSolve 400 KDM drive system to develop high starting torque with low starting current. Drive system shall be regenerative for all units. With power regeneration provided, the total harmonic distortion of regenerated power shall be less than 5% (125A) and less than 8% (220A & 250A). Means of absorbing regenerated power shall be provide by others. The drive power factor shall be 0.95 or better. Auto-transformer: Provide auto-transformer to adjust the main-line supply to the 400V required by the controller and drive.

Elevator Group Size	Simplex
Number of floors served	5

Travel (in)	858
Capacity [LBS]	5000
Speed [FPM]	200
Hoistway NEMA Rating	Hoistway rating is NEMA 1.
Machine Room NEMA Rating	Machine room rating is NEMA 1.
New Roping Ratio	2:1
Rope gripper	A new rope gripper over speed device shall be provided. The rope gripper shall prevent the car from striking the hoistway overhead structure due to a failure in the hoist motor, brake, coupling, shaft, gearing or control system. The rope gripper will be set to detect an ascending car over speed condition at a speed not greater than 10% higher than the speed at which the car governor is set to actuate. The device will also detect unintended car movement away from the landing with the hoistway door not in the locked position and the car door not in the closed position. The rope gripper will be designed so that no appreciable damage to, or deformation of, the cables will result from the stopping action of the device. Once activated by unintended movement or car over speed the device will remain activated until manually reset.
Power supply voltage [V]	480
Pit depth (in)	60
Overhead height (in)	171.375
Machine Room Location	Overhead
Machine Room Duct	KONE will remove all existing wiring, conduit and duct from the machine room. New conduit and duct properly sized and constructed for the job requirements will be installed (in accordance with applicable codes)
Existing Motor Size (hp)	28
New Motor Size	30
Calculated Motor Size	30
RPM	1800
Front/rear entrances	Front entrances only
Number of front openings	5
COP quantity	1
New hall monitor intercom (by factory)	Yes
Loadweigh Device	A loadweighing device will be provided which will continuously monitor the load in the elevator car. The loadweighing device provides information necessary for the Bypass Load Feature, and the Overload Feature to operate. The loadweigh device is also used to provide pre-torqueing so higher performance can be achieved.
Hoistway Duct	KONE will remove all existing wiring, conduit and duct from the hoistway. New conduit and duct properly sized and constructed for the job requirements will be installed (in accordance with applicable codes)
Qty Option Board	1
Voice Annunciator	Logic will be provided for factory-programmed speech synthesizer that issues spoken messages including floor arrivals, car departures and safe use of the elevator.

Hoist Motor

A new hoist motor shall be provided. The motor will be designed to stand the loads encountered for elevator service, sufficient capacity to operate with the contract load and speed without overheating, and will be rated in accordance with the standards of the IEEE.

Capacity [LBS]	5000
Speed [FPM]	200
Machine Room NEMA Rating	Machine room rating is NEMA 1.
New Roping Ratio	2:1
Existing Machine Type	22CT
Machine Manufacturer	Otis
Existing Motor Size (hp)	28
New Motor Size	30
New Motor Type	A new AC hoist motor shall be provided. The motor will be designed to stand the loads encountered for elevator service, sufficient capacity to operate with the contract load and speed without overheating, and will be rated in accordance with the standards of the IEEE.
Motor Mounting	Flange
RPM	1800
Car Top Handrail	A top of car handrail will be provided as required by code.
Owners Manuals	Standard
Qty Owners Manuals	1
Seismic Ring and String	A seismic ring and string will be provided.
Layout Type Required	An engineered machine room layout will be provided for informational purposes only.

Guides

New roller guide assemblies shall be provided.

Capacity [LBS]	5000
Speed [FPM]	200
Car Guide Dust Covers	Yes
Car Guideshoe Type	Elsco A (Roller)
CWT Guide Dust Covers	Yes
CWT Guideshoe Type	Elsco A (Roller)
New CWT Guideshoes	New spring dampened roller guide shoes will be provided.
New Car Guideshoes	New spring dampened roller guide shoes will be provided.

Governor	The car safety will be activated by a new speed governor located overhead, driven by a governor rope suitably connected to the car safety. The governor will be equipped with rope grip jaws designed to clamp the governor rope so as to actuate the car safety upon a predetermined over speed downward. The governor will be set at not less than 115% of specified rated car speed and not more than the maximum governor tripping speed specified in the code for the specified rated car speed. The rope grip jaws must be positively tripped within the permitted range of speed. The governor rope-tripping device will be so designed that no appreciable damage to or deformation of the governor rope will result from the stopping action of the device in operating the car safety. The governor over speed switches will conform to ANSI A17.1 code requirements and be so located and enclosed that excess lubricant will not enter the switch enclosure. Upon activation of the safety switch, the switch will remain in the open position until manually reset. The governor will be accurately adjusted and sealed with tripping speed specified. Date tags indicating the test date will be applied.
Capacity [LBS]	5000
Speed [FPM]	200
Hoistway NEMA Rating	Hoistway rating is NEMA 1.
Machine Room NEMA Rating	Machine room rating is NEMA 1.
Type of Governor(s)	Car
Governor Location	Machine Room
Tension Weight	For Car
Governor Ropes	A new governor cable(s) compatible with the specifications for the new governor will be provided. The governor cable is to pass over the governor sheave and under a weighted tension device at the bottom of the hoist way. During normal operation of each elevator, the governor rope will run free and clear of the governor gripping jaws, cable guards and all other stationary parts. A metal tag will be attached to the top of the car-releasing carrier, giving the diameter, material of cable, and with date of cable installation. Tags will be attached in an approved manner.
Travel (in)	858
Capacity [LBS]	5000
Governor Rope	A new traction steel governor rope of appropriate size to insure proper operation, will be provided. As a minimum, the governor rope will comply with the factor of safety requirements of the ASME A17.1 Safety Code for Elevators.
Governor Rope Diameter	1/2in
Pit depth (in)	60
Overhead height (in)	171.375

Hoist Ropes

New hoist cables shall be provided. The hoisting cables will be designed for elevator service, compatible with the hoist machine, and having a factor of safety at least equal to that specified in the ANSI Code.

Travel (in)	858
Capacity [LBS]	5000
New Roping Ratio	2:1
Pit depth (in)	60
Overhead height (in)	171.375
Machine Room Location	Overhead
Shackles	New shackles will be provided.
Wrapping	Single

Rope Gripper

A new rope gripper overspeed device shall be provided. The rope gripper shall prevent the car from striking the hoistway overhead structure due to a failure in the hoist motor, brake, coupling, hoistway, gearing or control system. The rope gripper will be set to detect an ascending car overspeed condition at a speed not greater than 10% higher than the speed at which the car governor is set to actuate. The device will also detect unintended car movement away from the landing with the hoistway door not in the locked position and the car door not in the closed position. The rope gripper will be designed so that no appreciable damage to, or deformation of, the cables will result from the stopping action of the device. Once activated by unintended movement or car overspeed the device will remain activated until manually reset.

Capacity [LBS]	5000
Speed [FPM]	200
Hoistway NEMA Rating	Hoistway rating is NEMA 1.
Machine Room NEMA Rating	Machine room rating is NEMA 1.
New Roping Ratio	2:1
Hoist Rope Type	Regular Lay
Rope Gripper Hardware & Support	Standard
Rope Gripper Mtg. Location	Hoistway

ReVive 500, 600

New KONE car & hall signalization shall be provided.

Elevator Group Size	Simplex
Number of floors served	5

Code year	2016
Capacity [LBS]	5000
Hoistway NEMA Rating	Hoistway rating is NEMA 1.
Front/rear entrances	Front entrances only
Number of front openings	5
Car fixture display color	The Car Operating Panel will incorporate a car position indicator showing car position in the hoistway with single or dual numeral and/or letter floor designations along with an arrow corresponding to the direction of car travel.
Car fixture material	Car fixture material finish will be #4 stainless steel.
Car fixture mounting	Car fixtures will be a flush mount design style.
Car position indicator type	Dot Matrix
COP quantity	1
Hall fixture display color	Amber
Hall fixture material	Hall fixture material finish will be #4 stainless steel.
Hall fixture mounting	Hall fixtures will be a surface mount design style.
Qty of hall stations (6.6" X 25")	5
Qty of car direction lanterns	1
Fire keyswitch type	FEO-K1 National Code
Jamb braille	New code compliant elevator jamb braille will be provided.
Qty of hoistway access switches	2
Voice Annunciator	Logic will be provided for factory-programmed speech synthesizer that issues spoken messages including floor arrivals, car departures and safe use of the elevator.

Machine Room Only Mechanical Layout Drawing

Project notes	Expected completion date of September 15th, 2020 shall be based on mutually agreed upon project schedule and completion of owner/non-elevator related items completed on schedule.
Handover date	Mutually agreeable project schedule will be determined at time of proposal acceptance. Current delivery lead time is 9 weeks from order receipt, deposit and approval of drawings.
Downtime period	7 weeks

Price Overview

Proposal pricing is based on the scope of work as defined herein. Any additional work required will be performed only upon purchaser's approval of a mutually agreeable change proposal. Any other deficiencies revealed in the progress of the work will be promptly reported to the purchaser with recommendations and cost for corrective action.

Total Sales Price (incl. use tax)	$180,040.76
Pricing Conditions	This offer is valid for 90 days.
Maintenance	Elevator will return to maintenance agreement between City of Idaho Falls and KONE upon completion of the modernization project.

Component Overview		
Equipment number	20242400	
Door Panel(s)		
ReNova Door Equipment		
Curtain of Light		
ReSolve 400		
Hoist Motor		
Guide shoes		
Governor		
Governor Ropes		
Traction Ropes		
Rope Gripper		
ReVive 500/600		
Sales price		**$ 180,040.76**
Total Sales Price, incl. use tax		**$ 180,040.76**

2 Tender Approval

Receiver:
KONE Inc.
Tyson Guthrie
9695 South Sandy Parkway
Sandy, Utah, 84070
tyson.guthrie@kone.com

Sender:
CITY OF IDAHO FALLS
140 S CAPITAL AVE
Idaho, IDAHO FALLS, 83405-0220

Submitted by:

Tyson Guthrie
Sr. Sales Consultant
01/16/2020

We accept the offer constituted by this proposal (total sales price of $180,040.76, incl. use tax) and agree to the conditions contained therein.

Approved by KONE Corporate Officer

Signature: C. M.

Printed Name: Chris Miller

Title: General Manager

Date: 2/7/20

Approved by Purchaser

Signature: _____

Printed Name:

Title:

Company Name:

Date:

Clarifications

• Contract terms between KONE Inc. and Purchaser shall be based on our Proposal and Attachments. (See Attachment "A" and "B")

• All new elevator equipment provided shall meet applicable ASME A17.1 code requirements. Any provisions of codes applicable to out-of-scope items shall be the Purchaser's responsibility. Cost of any future code changes adopted prior to permitting and completion are excluded.

• The existing cab and entrance dimensions, which may not meet current ADA or stretcher access rules, will be retained as is.

• Our proposal includes inspections and testing as required by the AHJ. However, any re-testing required due to other trades' failures to complete their work or tests in a timely manner will be billed at our regular billing rates.

• No costs for preventive maintenance services are included in this capital improvement pricing.

• The ASME code limits changes to the empty car weight + capacity of each elevator to 5% of the originally installed value. If past or proposed changes result in a change to the weight or system pressure (for hydraulic) greater than 5% above the original design values, the cost of any engineering and of any required modifications to the elevator system or structure shall be extra to this proposal scope and pricing. If this situation is discovered during the engineering process, KONE will notify purchaser and recommend an alternate design or other changes.

• In order to provide best pricing, proposal excludes any extra demobilizations and remobilizations. If we must demobilize from the jobsite for any reason outside our control, we shall be compensated at our regular billing rates.

• Proposal pricing is based on the scope of work as defined herein. Any additional work required will be performed only upon Purchaser's approval of a mutually agreeable change proposal. Any other deficiencies revealed in the progress of the work will be promptly reported to purchaser with recommendations and cost for corrective action.

• Asbestos: Notwithstanding anything contained to the contrary within this bid or contract, KONE's work shall not include any abatement or disturbance of asbestos containing material (ACM) or presumed asbestos containing materials (PACM). Any work in a regulated area as defined by Section 1910 or 1926 of the Federal OSHA regulations is excluded from KONE's scope of work without an applicable change order to reflect the additional costs and time. In accordance with OSHA requirements, the Customer shall inform KONE and its employees who will perform work activities in areas which contain ACM and/ or PACM of the presence and location of ACM and/or PACM in such areas which may be contacted during work before entering the area. Other than as expressly disclosed in writing, Customer warrants that KONE's work area at all times meets applicable OSHA permissible exposure limits (PELs). KONE shall have the right to discontinue its work in any location where suspected ACM or PACM is encountered or disturbed. Any asbestos removal or abatement, or delays caused by such, required in order for KONE to perform its work shall be the Customer's sole responsibility and expense. After any removal or abatement, customer shall provide documentation that the asbestos has been abated from the KONE work area and air clearance reports shall be made available upon request prior to the start of KONE's work.

• Purchaser shall provide any security, escort or other building service support personnel required during demolition, installation, testing, and inspections.

• For hydraulic elevators, we can assume no responsibility for unusual conditions such as hole cave in and complete hydraulic cylinder assembly embedded in concrete. The excavation of the hole to accommodate the new hydraulic cylinder assembly is based on encountering soil free of rocks, boulders, building construction members, sand, water, quicksand, underground caves and/or any other obstructions or unusual conditions. Should such obstructions or unusual conditions be encountered, additional time above or beyond the working days estimated to complete this project may be required. We will proceed with this portion of the project on a time and material basis, based on our normal billing rates.

Bid Attachment "A" / KONE Inc. General Terms and Conditions (Modernization)

1. APPLICATION OF THESE TERMS

The parties agree to be bound by the terms and conditions contained in the Bid Letter, this Bid Attachment A and

Bid Attachment B, including the documents incorporated herein by reference (collectively, the "Proposal").

2. SPECIAL PURCHASING REQUIREMENTS

This Proposal is made without regard to compliance with any special sourcing and/or manufacturing requirements including, but not limited to, Buy America, Buy American, U.S. Steel, FAR clauses, minority / disadvantaged supplier requirements or similar federal and/or state procurement laws. Should such requirements be applicable to this Project, KONE reserves the right to modify and/or withdraw its Proposal.

3. PROPOSAL CONDITIONS

The Proposal shall be open for acceptance within the period stated in the Bid Letter or, when no period is stated, for a period of 30 days from the date of the Bid Letter. Prior to commencing manufacture of the equipment described in the Bid Letter ("Equipment"), KONE must have (i) a fully executed contract; (ii) a schedule acceptable to KONE identifying the Equipment installation start date, or alternatively, KONE's letter specifying the ship date ("Ship Date Letter") signed by Customer, which, as applicable, is incorporated by reference herein; (iii) the first payment in Section 4 herein; and (iv) fully approved KONE layouts.

4. PAYMENT TERMS

Payment of the total Price is due within 30 days from invoice date, based on benchmarks as follows:

- 30% of the Price for engineering, site management, and overhead, billable and due upon execution of this Proposal or receipt of the subcontract;
- 50% of the Price for material and shipping, billable and due upon delivery of material to the jobsite or KONE Distribution Center;
- 20% of the Price for Equipment installation, billable and due at the billing cycle following the start of installation.

KONE reserves the right to delay, suspend, or stop the work, including manufacturing, delivery, installation and/or Equipment turnover, for non-payment, without liability to KONE or being held in default. Simple interest at 1.5% per month shall be charged on amounts not paid when due. Payments to KONE are not contingent on any third party payments to Customer. Customer shall reimburse KONE for all costs of collection, including courts costs and reasonable attorneys' fees.

Prior to turnover, KONE must be paid in full, less 10% maximum retention, the Price including all change orders. Retention shall be due and payable within 30 days of execution of the Uniform Final Acceptance or Equipment turnover, whichever occurs first.

If certified payroll reporting is required, KONE will submit the requested reporting in the format of the U.S. Department of Labor form WH 347 & WH 348. The Price does not include Textura or any other special billing requirements, which can be added via change order at a rate of 0.3% of the Price.

5. INSTALLATION

Customer shall be responsible for procurement and cost of all permits, except permits related to installation of the Equipment. Where KONE's scope of work or other responsibilities include the obligation to utilize materials and/or finishes resembling or identical to those pre-existing in the building, KONE shall use reasonable efforts to procure such materials and Customer acknowledges and accepts that the materials and/or finishes reasonably available may not be in all respects identical to those pre- existing in the building. This Proposal is conditioned upon KONE using its standard installation method. The installation of the Equipment shall start after Customer has completed all work set forth in Bid Attachment B and any other documents describing site requirements ("Site Requirements"), all of which are incorporated by reference herein. Within two (2) weeks prior to the scheduled delivery date for KONE's materials, KONE shall conduct a standard visual site survey to verify that the Site Requirements are complete and notify Customer if there are outstanding deficiencies preventing KONE from beginning installation. KONE's site survey may include, but is not limited to, inspection of site access, working

and safety conditions on site, wear and tear of any existing structures or surfaces, and planning of any dismantling or removal of existing equipment, components and materials, where applicable. KONE shall not be deemed to have surveyed any hidden structures, latent defects, subsurface conditions, or other non-visible matters, including but not limited to searching for hazardous substances and/or materials, which shall be subject to Section 16. If KONE's site survey reveals any deficiencies, KONE shall be entitled to delay the start of installation and Customer shall be responsible for all additional costs incurred by KONE, including without limitation, costs associated with: labor reallocation, re- directing materials to and storage in a KONE Distribution Center, additional labor for double handling of materials, and additional trucking, freight and insurance. Once the Site Requirements are completed, the start of installation shall be subject to the availability of labor and the delivery of material, if applicable.

KONE's work shall be performed during regular union working hours of regular working days, Monday to Friday, statutory holidays excluded. If overtime is mutually agreed upon and performed, the additional costs for such work shall be added to the Price at KONE's standard overtime rates. If the installation cannot be performed in an uninterrupted manner for any reason beyond KONE's control, Customer shall store the Equipment at Customer's cost and compensate KONE for any costs caused by such delay including, but not limited to, double handling of Equipment and demobilization.

KONE shall not be required to perform overtime or any Customer directed change to its work ("Extra Work") without an executed change order. No action by KONE, including but not limited to, performing Extra Work without an executed change order, shall be a waiver of KONE's right to seek payment for Extra Work performed. KONE shall be entitled to an extension of time and an equitable adjustment in the Price, including but not limited to, any increased costs of labor, including overtime, resulting from any change of schedule, re-direction of KONE personnel to another work area, acceleration, or out of sequence work.

KONE shall take reasonable methods to protect its work-in-place while KONE is actively on site and until execution of a KONE Uniform Final Acceptance, which is incorporated by reference herein. Should damage occur to KONE property, material or work-in- place by fire, water, theft or vandalism, Customer shall compensate KONE for said damages. Additionally, the Customer is solely responsible for ensuring that the equipment maintenance contractor, if not KONE, does not disturb, delay or interfere with KONE's work. KONE shall abide by Customer's safety policies and procedures to the extent such policies and procedures are not in conflict with KONE's Safety Policy. Testing and/or security features of Equipment must be completed before Equipment turnover. KONE is not responsible for damages, either to Equipment or the building, or for any personal injury or death, arising out of or resulting from any code required safety tests performed on Equipment or hoistway access granted by Customer to other trades.

6. TEMPORARY USE

Temporary use of certain types of Equipment may be permitted, provided the use period allows adequate time for Equipment restoration for final turnover and Customer executes KONE's Temporary Use Agreement. Temporary use shall be invoiced separately and subject to payment terms in Section 4 herein. At the end of temporary use, Customer shall return the Equipment to KONE in "like new" condition.

7. HAZARDOUS MATERIALS

Notwithstanding anything contained to the contrary within this Subcontract, KONE's work shall not include any abatement or disturbance of asbestos containing material (ACM), presumed asbestos containing materials (PACM), or other hazardous materials (i.e. lead, PCBs) (collectively "HazMat"). Any work in the affected area where reasonable precautions will be inadequate to prevent foreseeable bodily injury or death to persons resulting from the HazMat is excluded from KONE's scope of work without an applicable change order to reflect the additional costs and time. In accordance with OSHA requirements, the Customer shall inform KONE and its employees who will perform work activities in areas which contain HazMat of the presence and location of HazMat in such areas which may be contacted during work before entering the area. Other than as expressly disclosed in writing, Customer warrants that KONE's work area at all times meets applicable OSHA permissible exposure limits (PELs). KONE shall have the right to discontinue its work in any location where suspected HazMat is encountered or disturbed. Any HazMat removal or abatement, or delays caused by such, required in order for KONE to perform its work shall be the Customer's sole responsibility and expense. After any removal or abatement, Customer shall provide documentation that the HazMat has been abated from the KONE work area

and air clearance reports shall be made available upon request prior to the start of KONE's work.

8. TITLE AND RISK TO EQUIPMENT

Title to and ownership of all Equipment intended for incorporation in KONE's work, whether installed or stored on or off site, shall remain with KONE until final payment is made and, in the case of suspension or termination for non-payment, the parties agree that KONE may retake possession and remove any or all of KONE's works, Equipment or apparatus without material damage to the property and irrespective of the manner in which the same is attached or affixed. Risk of loss in KONE's work and Equipment passes to Customer upon delivery to the site or off-site storage.

Any tools, devices, or other equipment that KONE uses to perform its work or monitor the Equipment remains the sole property of KONE. If this Proposal terminates or expires for any reason, Customer will give KONE access to the premises to remove such tools, devices or equipment at KONE's expense.

9. TURNOVER

Prior to turnover, KONE must receive a final punchlist. Upon turnover, KONE requires a signed Uniform Final Acceptance. KONE shall provide its standard electronic O&M manuals with CD-ROMs in electronic format, if applicable, upon execution of the Uniform Final Acceptance. Standard KONE samples shall be provided upon request. No mock-ups or video training are included in the Price.

10. DELAY

KONE shall not be liable for any loss, damage, claim, or delay due to any cause beyond KONE's control, including, but not limited to, acts of government (including a change in law), strikes, lockouts, work interruption or other labor disturbance, delays caused by others, fire, explosion, theft, floods, inclement weather, riot, civil commotion, war, malicious mischief, or acts of God. In the event of such delays,

KONE shall be entitled to an extension in time equal to the length of such delay and an equitable adjustment in the Price. Customer shall compensate KONE for labor and material cost escalations resulting from Project delays not caused by KONE, which extend completion of KONE's work beyond the end of the current calendar year. Customer is on notice that IUEC labor rates increase annually.

11. LIMITED WARRANTY

For one (1) year after the acceptance date set forth in the signed Uniform Final Acceptance, date of Equipment turnover, or date of Customer's use of Equipment (unless such use is pursuant to the Temporary Use Agreement), whichever occurs first, KONE warrants Equipment against defect in workmanship and material. The warranty excludes remedy for damage or defect caused by abuse, misuse, vandalism, neglect; repairs, alteration or modifications not executed by KONE; improper or insufficient maintenance, improper operation, characteristics of the building such as electrical power or security features, natural or other catastrophe such as flood, fire, or storm, or normal wear and tear and normal usage. The warranty excludes training or instruction in the proper operation or maintenance of Equipment. Specific noise ratings and energy efficiencies cannot be guaranteed due to different building characteristics and ambient noise levels. Customer's remedy is limited to repair or replacement of a defective part, in KONE's sole discretion, and excludes labor. KONE DISCLAIMS ANY OTHER WARRANTY OF ANY KIND, EITHER EXPRESSED OR IMPLIED, INCLUDING WITHOUT LIMITATION, THE IMPLIED WARRANTIES OF MERCHANTABILITY OR FITNESS FOR A PARTICULAR PURPOSE, OR NON-INFRINGEMENT.

12. IDEMNIFICATION

KONE shall only indemnify and hold Customer harmless for claims, damages, losses or expenses, but excluding loss of use ("Claims") due to bodily injury, including death, or tangible property damage (other than the Project or KONE's work itself) to the extent caused by KONE's negligent acts or omissions. KONE shall not indemnify Customer for any other Claims. Customer agrees to indemnify and hold KONE harmless from any Claim for bodily injury, including death, or tangible property damage in connection with the use or operation of the

Equipment. Each party shall defend itself in the event of a Claim.

13. INTELLECTUAL PROPERTY

KONE shall retain title and ownership of all intellectual property rights relating (directly or indirectly) to the Equipment provided by KONE, including but not limited to software or firmware (whether in the form of source code, object code or other), drawings, technical documentation, or other technical information delivered under the Proposal. KONE grants Customer a non-exclusive and non-transferable license and right to use the software and firmware in connection with the use and maintenance of the Equipment. Customer shall not use any drawings, technical documentation or other technical information supplied by or on behalf of KONE for any purposes other than those directly related to the Proposal or to the use and maintenance of the Equipment. Customer shall not in any form copy, modify or reverse engineer the software, or give access to the software for such use to any third party without KONE's prior written consent. KONE shall not provide any information such as KONE's internal manuals, manufacturing drawings, source codes, or other proprietary and confidential information, all of which are excluded from the Proposal.

14. INSURANCE

In lieu of any Customer insurance requirements, KONE shall provide its standard certificate of insurance, which shall be deemed to satisfy all insurance requirements for this Project. KONE shall not provide loss runs, insurance rate information, copies of its insurance policies or any other information which KONE considers confidential. KONE shall not provide coverage for professional (E&O) liability, pollution liability, data privacy/security, or no-fault medical payments. If the Project is covered by a Wrap Up Insurance Program, KONE agrees to participate provided there is no cost to KONE, no reduction in the Price, and subject to KONE's review of the proposed program. The insurance requirements contained in the wrap up insurance program's manual shall govern as the only insurance requirements for this Project. In the event that the wrap up insurance program is terminated before completion of KONE's Work, KONE will provide its standard insurance certificates which shall satisfy the insurance requirements for this Project. This shall apply to the project specific Wrap Up Insurance Program's Manual and any applicable enrollment documents. If KONE's primary limits are sufficient to satisfy insurance coverage requirements, excess/umbrella liability will not be required or if excess/umbrella is required, KONE's excess coverage does not follow form although typically provides broader coverage than KONE's primary policies. The excess coverage is not AM Best Rated nor licensed to do business within the jurisdiction although the carrier has strong Standard & Poor's and Moody's financial ratings that may be evidenced upon request.

15. LIMITATION OF LIABILITY

In no event shall either party be liable to the other party for any consequential, special, punitive, exemplary, liquidated, incidental, or indirect damages (including, but not limited to, loss of profits or revenue, loss of goodwill, loss of use, increase in financing costs) (collectively, "Consequential Damages") that arise out of or relate to this Proposal even if such party has been advised of the possibility of such Consequential Damages. The limitation set forth in this section shall apply whether the claim is based on contract, tort or other theory.

16. CONCEALED OR UNKNOWN CONDITIONS

If during the course of its work, KONE encounters conditions at the site that are subsurface, differ materially from what is represented in the contract documents, or otherwise concealed physical conditions, KONE shall be entitled to an extension of time and additional costs for the performance of its work, which shall not be subject to any payment conditions or contingencies.

17. TECHNICAL SURVEY

KONE's Price and obligations under this Proposal are subject to a technical survey to be performed on Customer's existing units within 90-days of the effective contract start date. If a safety hazard or code violation is identified during KONE's technical survey, Customer shall immediately remove the unit from service until repairs are performed. KONE is not obligated to perform tests, correct outstanding violations or deficiencies that were not addressed by the prior service provider and/or the owner, or make related necessary repairs or component

replacements on the unit. If additional work is necessary, KONE shall provide a separate proposal or recommendation for such work. Customer agrees to indemnify, defend, and hold KONE harmless for any claims arising out of Customer's failure to comply with KONE's recommendations and proposal, and any obligation on the part of KONE to indemnify or defend Customer with regard to such claim shall be null and void. If Customer does not immediately approve KONE's proposal or recommendation, KONE reserves the right to terminate this Proposal/contract without penalty.

18. TERMINATION

If a party materially breaches this Proposal, the other party shall provide written notice of the breach and a reasonable time to cure the breach, but in no event less than 30 days. If the breaching party fails to cure the breach within the specified time period, the non-breaching party may terminate the Proposal upon 15 days written notice to the other party. If KONE notifies Customer of a material breach pursuant to this paragraph, KONE may temporarily suspend its work without liability.

19. GOVERNING LAW AND DISPUTE RESOLUTION

The parties agree that this Proposal shall be governed by the laws of the state where the Project is located, and venue for disputes shall be located in that state. KONE does not agree to participate in arbitration proceedings.

20. PRICE ADJUSTMENT

KONE shall be entitled to an equitable adjustment in the Price, including but not limited to, any increased costs of materials, resulting from any change in law (by legislation, executive order, treaty or other similar means), or a change in law that imposes tariffs on raw materials or finished goods.

21. MISCELLANEOUS

This Proposal, including the documents incorporated herein by reference, constitutes the entire agreement of the parties and supersedes all prior negotiations, understandings, and representations whether written or oral in relation to the subject matter hereof. Where a conflict or ambiguity exists between this Proposal and any other contract document (including but not limited to, Customer's drawings and specifications), the terms and conditions of this Proposal shall control. This Proposal may be amended only in writing by the duly authorized representative of both parties. This Proposal may be executed in one or more counterparts. Each counterpart shall be considered an original and all of the counterparts shall constitute a single agreement binding all the parties as if all had signed a single document. For purposes of executing this Proposal, a document signed by electronic means is to be treated as an original document. The failure of either party to insist upon performance or strict performance of any of the terms or conditions of this Proposal shall not be deemed a waiver of any rights or remedies that such party may have or a waiver of any subsequent breach or default under this Proposal. Neither party may assign or transfer the benefit or burden of this Proposal without prior written consent of the other party.

KONE

Bid Attachment "B" / Site Requirements & Work by Other Trades

The work described below is a summary of work to be performed by others ("Work by Other Trades") that may be required in conjunction with the elevator modernization performed by KONE (the "Work"). Purchaser shall provide any and all building electrical, structural and mechanical system upgrades required for code compliance, life safety, and proper equipment installation and operation. The Authorities Having Jurisdiction (AHJ) may require additional remedial or preparatory work. All required remedial or preparatory work shall be performed by properly licensed trade contractors in compliance with applicable codes and based on a schedule of performance that allows for uninterrupted progress of the Work. Under no circumstances shall KONE be responsible for any cost associated with the performance of remedial work by others.

Purchaser shall provide the following unless specifically included in KONE's Work:

Electrical

• A properly rated three phase fused disconnect switch, externally operable and lockable in the open position, located as required by code. Accommodate any increases in motor size or feeder loads.
• A dedicated 110 VAC fused disconnect switch, externally operable and lockable in the open position adjacent to the machine room door for cab lighting and ventilation, located as required by code
• Shunt-trip disconnect if fire sprinklers are present in machine room or hoistway.
• GFI 120 VAC convenience outlets in machine room and pit.
• Separate outlet in the pit area if a sump pump is installed.
• Telephone line service brought to the elevator machine room for emergency communication device.
• Any required RF shielding of TV or radio transmitters, antennae and/or wave-guides.
• Conduit with pull boxes from each elevator bank to any remote fire control or communication panels specified
• If required by building code, standby/emergency power , sufficiently sized to provide power of permanent characteristics to each elevator's disconnect, simultaneously, upon loss of regular power, including feeders, transfer switches and auxiliary contact signal outputs to elevator controllers.

Machine Room

• A code-compliant machine room. Provide or maintain fire rating as required by building code.
• Fire-rated door for access into the machine room. Door shall be self-closing and self-locking, operable from inside the room without the use of a key.
• Independent ventilation or an air conditioning system for the elevator machine room, to assure temperature is maintained between 65 degrees and 95 degrees Fahrenheit.
• Fire extinguisher inside machine room.
• Minimum clear machine room height of 7'-0".
• Suitable lighting that provides a minimum of 19 ftc at floor.
• Removal of any non-elevator related equipment and materials from within the machine room and proper disposal of oil and other hazardous or non-hazardous substances and materials.

Hoistway

• A code-compliant hoistway, constructed in accordance with KONE's requirements and specifications. Provide or maintain fire rating as required by building code.
• Patching of all holes in hoistway walls with fire rated material.
• Beveling all ledges within hoistway measuring over 4".
• Removal of any non-elevator related equipment and materials from within the hoistway and proper disposal of oil and other hazardous or non-hazardous substances and materials.
• A guarded light fixture and light switch in pit. Switch must be located 42" above the lowest landing floor level.
• A means of displacing water located in the pit and containing and disposing of oil, chemicals, and other substances in compliance with environmental laws and regulations (KONE assumes no responsibility for discharge of oil, chemicals, and other substances into storm water systems, sanitary sewer systems, retention ponds, etc.).
• Elevator hoistway ventilation to the outside atmosphere as required by building code

Fire Service

• Fire alarm smoke detectors with wiring and relays in the machine room terminating at elevator controller.
• Fire alarm initiating devices must be located in front of each elevator entrance as well as in the machine room and at the top of the hoistway.
• Where sprinklers exist in the machine room and/or hoistway, a fire alarm initiating device within 12" of each

sprinkler head.

Access Integration/Security
• Our proposal includes KONE logic and provisions for the specified Touchscreen(s), Keypad Destination Operating Panel(s), Monitoring System(s) and Multi-Media Equipment.
• Card Readers and/or any additional required hardware & software for proper functionality of access control/security system(s) shall be furnished and installed by others.
• Any required software to ensure proper communication between KONE control system(s) and building system(s) shall be the responsibility of others.
• A designated 115V 15A circuit is required at each of the remote monitoring stations.
• KONE recommends a minimum 100 Mbit/s Ethernet for each of the following application(s): Integrated Touchscreen/Keypad Destination Operating Panels, Monitoring System, Multi-Media Equipment, and Card Readers.

Counterweighting
• Pricing is based upon the existing car to counterweight weight ratio being consistent with elevator industry standards. This is defined as the counterweight weight being equal to the empty car weight plus 40%. The actual assemblies will be weighed during the modernization process. If modifications are required to correct the existing weight balance, these modifications will be provided at additional cost.

RK1 Fuses and Circuit Breakers
• Fuses are to be current limiting class RK1 or equivalent. Circuit breakers are to have current limiting characteristics equivalent to RK1 fuses. Provisions of these fuses are the responsibility of others, not KONE.

General
• Access to the building to perform the Work and for deliveries with dry, protected storage adjacent to the hoistway.
• Cutting of existing walls, floors and finishes, together with all repairs made necessary by such cutting or changes, e.g. cutting of lobby walls for flush hall fixtures and removal of encroaching lobby features such as wall-mounted ashtrays. Removal, replacement, and/or repair of any mirrors, millwork, plaster, stone or other special hall finishes.
• All work of other trades must be complete and ready at time of first elevator inspection, or elevator will not be released for operation by the AHJ. If the AHJ does allow temporary operation under a Temporary Operating Inspection (TOI), any associated costs shall be Purchaser's responsibility.
• Our tender is based on suitable site conditions, material and tooling storage space, and bathroom access being available on site.
• Safe working environment must be provided and supported by provision for adequate entrance protection, means of hoisting, hoistway dividing screens, and protection of floors walls and doors etc.
• Emergency evacuation procedures to be clearly defined where required. Subject to site survey and actions agreed.
• Any portion of the Work that is subject to the permissions of local authorities beyond the elevator permits must be identified to KONE. Responsibility for permits to be agreed. Permits and appropriate signage indicating any changes to pedestrian access routes for building users must be in place prior to start of the Work.
• Elevator installation methods requires the integrity of the existing Safety Gear and Overspeed protection devices, and are therefore subject to verification of suitability prior to commencement of the work. Any remedial work required or alternative solution is not included in this tender.

IDAHO FALLS

MEMORANDUM

FROM: Josh Roos, City Treasurer
DATE: Friday, February 7, 2020
RE: Treasurer's Report for December 2019

Council Action Desired

☐ Ordinance ☐ Resolution ☐ Public Hearing
☒ Other Action (Approval, Authorization, Ratification, etc)

Approve and accept the Treasurer's Report for the month-ending December 2019 (or take other action deemed appropriate).

Description, Background Information & Purpose

A monthly Treasurer's Report is required pursuant to Resolution 2018-06 for City Council review and approval. For the month-ending December 2019, total cash and investments total $109.3M. As reported in the attached investment report the total investments reconciled to the general ledger were reported at $12.6M, which includes revenues of $10.9M and interdepartmental transfers of $1.7M. Total disbursements reconciled to the general ledger were reported at $16.3M, which includes salary and benefits of $5.4M, operating costs of $9.2M and interdepartmental transfers of $1.7M.

Relevant PBB Results & Department Strategic Plan

☐ ☒ ☐ ☐ ☐ ☐ ☐ ☐

The monthly Treasurer's Report supports the good governance community oriented result by providing sound fiscal management and enable trust and transparency of City funds.

Interdepartmental Coordination

Not applicable.

Fiscal Impact

Not applicable.

Legal Review

Not applicable.

CITY OF IDAHO FALLS MONTHLY TREASURER'S REPORT
December, 2019

FUND	BEGINNING CASH & INVESTMENTS	TOTAL RECEIPTS	TOTAL DISBURSEMENTS	ENDING BALANCE CASH & INVESTMENTS
GENERAL	$3,443,054.39	$2,487,546.50	$5,523,473.42	$407,127.47
STREET	$1,407,096.54	$101,971.69	$604,295.29	$904,772.94
RECREATION	($390,380.67)	$146,632.11	$187,889.55	($431,638.11)
LIBRARY	$2,757,005.23	$80,867.24	$266,903.72	$2,570,968.75
AIRPORT PFC FUND	$0.00	$57,814.83	$57,814.83	$0.00
MUNICIPAL EQUIP. REPLCMT.	$15,582,318.76	$292,266.45	$713,020.00	$15,161,565.21
EL. LT. WEATHERIZATION FD	$3,112,093.02	$11,486.01	$34,808.43	$3,088,770.60
BUSINESS IMPRV. DISTRICT	$67,896.86	$2,873.38	$35,000.00	$35,770.24
GOLF	($280,899.31)	$29,661.44	$200,020.22	($451,258.09)
SELF-INSURANCE FD.	$2,715,366.23	$142,714.97	$61,147.24	$2,796,933.96
HEALTH & ACCIDENT INSUR.	$4,559,213.74	$4,703.30	$0.00	$4,563,917.04
WILDLAND	$291,249.72	$89,615.40	$1,801.34	$379,063.78
SANITARY SEWER CAP IMP.	$2,553,452.60	$19,976.65	$1,085.00	$2,572,344.25
MUNICIPAL CAPITAL IMP.	$1,205,131.52	$20,811.91	$23,166.00	$1,202,777.43
STREET CAPITAL IMPROVEMENT	$884,167.10	$18,009.58	$6,561.97	$895,614.71
BRIDGE & ARTERIAL STREET	$695,342.28	$34,401.81	$0.00	$729,744.09
WATER CAPITAL IMPROVEMENT	$4,279,030.29	$33,075.27	$0.00	$4,312,105.56
SURFACE DRAINAGE	$184,422.30	$6,214.81	$0.00	$190,637.11
TRAFFIC LIGHT CAPITAL IMPRV.	$1,001,309.33	$57,105.63	$66,878.42	$991,536.54
PARKS CAPITAL IMPROVEMENT	$47,764.36	$16,903.82	$50,051.49	$14,616.69
FIRE CAPITAL IMPROVEMENT	($2,860,469.04)	$10,042.01	$0.00	($2,850,427.03)
ZOO CAPITAL IMPROVEMENT	($155,385.58)	$177,019.23	$0.00	$21,633.65
CIVIC AUDITORIUM CAPITAL IMP.	$87,905.81	$90.68	$0.00	$87,996.49
GOLF CAPITAL IMP.	$8,413.82	$5,927.53	$0.00	$14,341.35
POLICE CAPITAL IMPROVEMENT	($677,059.95)	$0.00	$0.00	($677,059.95)
AIRPORT	$896,589.41	$881,074.03	$1,553,833.21	$223,830.23
WATER	$5,628,942.42	$957,233.97	$672,946.07	$5,913,230.32
SANITATION	$2,739,649.47	$490,952.84	$347,871.63	$2,882,730.68
AMBULANCE	($2,549,610.95)	$406,292.98	$534,772.84	($2,678,090.81)
IDAHO FALLS POWER	$48,385,118.77	$4,899,411.29	$4,113,781.40	$49,170,748.66
FIBER	($169,336.62)	$92,702.55	$394,356.69	($470,990.76)
WASTEWATER	$17,480,218.86	$1,043,069.09	$813,915.72	$17,709,372.23
TOTAL ALL FUNDS	**$112,929,610.71**	**$12,618,469.00**	**$16,265,394.48**	**$109,282,685.23**

CITY OF IDAHO FALLS
INVESTMENT RECONCILIATION
Dec-19

	BOND	AGENCY	TREASURY	COMMERCIAL PAPER	CERTIFICATES	MONEY MARKET	CASH/EQUIVALENT	TOTAL
LPL					$1,980,000.00		$67,920.85	$2,047,920.85
LGIP						$10,113,249.39		$10,113,249.39
WELLS FARGO	$42,690,000.00	$9,995,000.00	$8,750,000.00			$4,776,349.73		$66,211,349.73
DA DAVIDSON		$500,000.00			$1,500,000.00		$759,524.63	$2,759,524.63
WASHINGTON FEDERAL					$250,000.00		$4,001.41	$254,001.41
ISU					$250,000.00		$13,272.91	$263,272.91
KEY BANK	$995,000.00	$2,669,826.27	$1,215,000.00				$464,926.78	$5,344,753.05
IDAHO CENTRAL					$4,000,000.00		$200,468.56	$4,200,468.56
BANK OF IDAHO						$5,102,765.94		$5,102,765.94
BANK OF COMMERCE					$2,000,000.00		$35,394.17	$2,035,394.17
	$43,685,000.00	$13,164,826.27	$9,965,000.00	$0.00	$9,980,000.00	$19,992,365.06	$1,545,509.31	**$98,332,700.64**

January 27, 2020 - Unapproved

The City Council of the City of Idaho Falls met in Council Work Session, Monday, January 27, 2020, in the Council Chambers in the City Annex Building located at 680 Park Avenue in Idaho Falls, Idaho at 3:00 p.m.

Call to Order and Roll Call:
There were present:
Mayor Rebecca L. Noah Casper
Councilmember Michelle Ziel-Dingman
Councilmember John Radford (departed at 6:28 p.m.)
Councilmember Jim Francis
Councilmember Shelly Smede
Councilmember Thomas Hally
Councilmember Jim Freeman

Also present:
Duane Nelson, Fire Chief
Scott Grimmett, Fire Marshal
Chris Fredericksen, Public Works Director
Chris Canfield, Assistant Public Works Director
Dana Briggs, Economic Development Coordinator
Brad Cramer, Community Development Services Director
Ronnie Campbell, Parks and Recreation Superintendent
Bryce Johnson, Police Chief
Kent Fugal, City Engineer
Michael Kirkham, Assistant City Attorney
Kathy Hampton, City Clerk

Mayor Casper called the meeting to order at 3:03 p.m. with the following items:

Acceptance and/or Receipt of Minutes:
It was moved by Councilmember Radford, seconded by Councilmember Francis, to receive recommendations from the Planning and Zoning Commission pursuant to the Local Land Use Planning Act (LLUPA). Roll call as follows: Aye – Councilmembers Radford, Freeman, Smede, Francis, Dingman, Hally. Nay – none. Motion carried.

Calendars, Announcements and Reports:
January 30, Idaho Falls Power (IFP) Board Meeting; and, City Council Meeting
January 29-31, Energy Communities Alliance (ECA) Meetings
February 6, Leadership in Nuclear Energy (LINE) Commission
February 8, Airport Leadership Workshop
February 10, City Council Work Session
February 10-12, Community Builders Workshop
February 11, Idaho Falls Downtown Development Corporation (IFDDC) Parking Validation Merchant Meeting
February 12, Bonneville Metropolitan Planning Organization (BMPO)
February 13, City Council Meeting
February 17, Presidents' Day (City Offices closed)
February 21, City Club Event; and, Idaho Falls Police Department (IFPD) Annual Awards Banquet
February 24, City Council Work Session
February 27, IFP Board Meeting; and, City Council Meeting
February 28, City Club Event (Tentative); and, Idaho Falls Fire Department (IFFD) Awards Banquet

Mayor Casper noted the City Club Event will include a panel discussing the Idaho National Laboratory (INL) and the vision for nuclear future. She also noted Councilmembers Radford and Francis will be participating in a Community Builders Workshop in Colorado and will be absent from the February 10 Council Work Session. Mayor

Casper stated she will be absent from the January 30 IFP Board Meeting and the City Council Meeting due to ECA Meetings. She briefly reviewed items for the February 6 LINE Commission. She also briefly reviewed discussion items from the current Legislative Session including property taxes, grocery tax, and, foregone money. She stated the Census process will be begin in the near future. She also briefly addressed the July 4 parade and the Council entry.

Liaison Reports and Council Concerns:

Councilmember Dingman recognized the Idaho Falls Regional Airport partnership with Allegiant Air for delivery of a zoo animal. She stated the Targhee Regional Public Transportation Authority (TRPTA) Board has officially accepted an offer for the purchase and sale of the TRPTA property. This sale is conditional upon a Phase I Environmental Study and is part of the formal bankruptcy proceedings. This sale will also put all debt in the past and will allow other public transit to move forward. Councilmember Dingman is hopeful the Community Transportation Association of America (CTAA) contract, as previously presented (at the November 25, 2019 Council Work Session) will be executed in the near future.

Councilmember Radford indicated, per the City Club Event, there is world-wide interest in advanced nuclear. He believes this will be beneficial to the local community.

Councilmember Francis stated the Community Builders Workshop will be discussing several items including anticipation of growth. He also stated IFPD is working on a national manual that will be adapted to Idaho; there are legislative session items related to law enforcement; a future presentation of the IFPD facility will be presented at Rotary on February 5; and, he reiterated the IFPD Awards Banquet on February 21.

Councilmember Freeman stated a water tower presentation is being held on January 27 for the downtown merchants. He also stated the IFPD has several vacancies.

Councilmember Hally believes, regarding property taxes discussion, the 3% allowable should be taken each year to prevent 'kicking the can down the road'. He noted the property tax rates are not in the City's control although property tax is important and will be a huge issue in the legislature. He also noted the new construction amount is tied to the tax base. Councilmember Hally stated he recently attended a water summit, and, he distributed an article to the other Councilmembers regarding energy.

Councilmember Smede stated she recently visited with her new liaison directors.

Business License Ordinance Discussion:

Chief Nelson stated this discussion began with the Citizen Review Committee (CRC) as the IFFD CRC believed the Prevention Division should be expanded into businesses and properties. He indicated there are more than 5000 commercial properties within the City that may have substantial issues when the IFFD responds. Chief Nelson reviewed the CRC recommendations: add full-time staff to focus on data entry and tracking; proactively work to reduce the number of false alarm calls (there were 500+ alarm nuisance calls in 2019); fully implement Computer Aided Dispatch (CAD); proactive notification when commercial building undergo change of ownership, use of occupancy; educate business owners, homeowners and public about the vital importance of fire and life safety systems; and, modernize the permit/license processes. Chief Nelson stated the Prevention Division wants to annually inspect the high-risk hazards, utilize operational staff, and, focus on pre-plans for low-risk businesses. He also reviewed Prevention Division goals: create community-based prevention framework where property owners are working with IFFD annually to inspect, identify hazards, and, verify code compliance; and, consolidate information to ensure dispatch alerts will include current hazard types, pre-plans, and, fire code permits. It was noted this registry will only apply to businesses within City limits. Chief Nelson stated, per the proposed ordinance, those businesses will contact the IFFD. This business information will be processed and registered and a license will be issued. It was noted the fee for this license was approved at the December 19 Council Meeting. Brief comments and discussion followed regarding non-compliance and penalties. Fire Marshal Grimmett stated these licenses will be expanded through the Clerk's Office and will be entered into the current TRAKiT software. Mr. Kirkham stated the City currently licenses hazardous businesses although there are several businesses that are not currently licensed. He stated a communication plan will need to be in place. Chief Nelson believes approximately 50% of these businesses are currently registered. He stated an administrative assistant has already been hired to assist with this licensing. Brief comments and discussion followed regarding the licensing process. Chief Nelson believes this process may take several years. Councilmember Smede questioned the benefit of this license. Chief Nelson stated this will assist with safety, regulations of the International Fire Code (IFC), and, operations. He stressed this license would not be required

for every business in the City, this is only for higher-risk, higher-hazard businesses. He recognized the specific sections in the proposed ordinance that are required in the IFC. Additional general comments followed, including the possible requirement for insurance coverage, sprinkler systems, and, State licensing requirements. This item will tentatively be included on the February 13 Council Meeting agenda.

Snow Removal Update:
Director Fredericksen stated any potential snow removal action is dependent on anticipated daily snowfall. He noted the City typically receives approximately 38" of snowfall on an annual basis. To date, the City has received 42" of snowfall which is 57% higher than normal. The snow events have also included wind issues, which compounds the snow removal effort. Director Fredericksen stated the snow removal policy is intended for long-term better service as well as cost savings, noting any decisions are taken very seriously. He stated contractors have been used for the previous three (3) snow events this season. He also stated arterial/collector and Priority One (1) and Two (2) streets, which account for 90% of traffic, are plowed within 24-48 hours. He noted the most recent snow event required multiple contractors to plow in residential areas. Plowing began on a Monday and the entire City was plowed by that same Wednesday, although additional plowing was required due to wind issues. Director Fredericksen reviewed the City's interactive website of snow removal. He stated $250,000 has been expended in contract work to date. $525,000 has been historically budgeted for snow removal although that amount was increased to $1M in the previous year to establish budget spending authority. Director Fredericksen also reminded the Council of the Resolution to establish a bank account of $1M to be utilized for snow removal. Any amount in this account in excess of $1M would be potentially utilized for other items. Director Fredericksen stated a major issue with snow removal is clearing the approximate 28,000 driveways, which is the most expensive process. He noted equipment with snow gates has been helpful although contractors do not have the snow gate equipment. This equipment costs approximately $17,000 per grader. Director Fredericksen stated another major issue is identifying addresses that are actually located in City limits. He commended the Public Works staff for addressing this difficult and time-consuming issue. To the response of Councilmember Freeman, Director Fredericksen believes the clearing of the driveways began with INL employees and their unique schedules. He noted although this is a convenience for residents this is very time consuming and can be challenging to accommodate. He also noted there is not enough equipment to immediately open residential areas, therefore these areas must be prioritized. Councilmember Freeman noted there were fewer tickets issued than in the past. Director Fredericksen commended the Public Information Officer for the notifications. To the response of Councilmember Radford, Director Fredericksen stated uncleared sidewalks should be reported to dispatch. Councilmember Freeman noted fire hydrants should also be cleared of snow by those adjacent property owners. Director Fredericksen noted $55,000 has been expended in overtime to the 21 Street Division employees.

Sewer Ordinance Revision Discussion:
Director Fredericksen stated changes to the sewer ordinance are due to the Idaho Department of Environmental Quality (DEQ) taking over primacy of wastewater discharge permitting from the Environmental Protection Agency (EPA). Pre-treatment inspections were conducted in the previous year and requested changes include: change approval authority; create control authority of Public Works; minor changes to definitions of grab samples; baseline reporting; administrative fine changes; and, injunctive relief. Director Fredericksen stated Wastewater staff has worked diligently with any concerns from the DEQ. General comments followed regarding proposed changes. It was noted these are State-wide changes. This item is tentatively scheduled for the February 13 Council Meeting agenda.

E-Scooter/E-Bike Follow-up Discussion:
Mayor Casper stated this item has been previously discussed (at the November 12, 2019 and December 9, 2019 Council Work Sessions). The ordinance has been modified to reflect requested changes by Councilmembers. Ms. Briggs reiterated these proposed changes were discussed with Legal Services and staff.
Councilmember Francis reviewed the following proposed changes:
Whereas statements – would clarify a beneficial relationship with the shared companies and, would be consistent with the recent Carbon-free Community Resolution.
Definition of Central Downtown Area – this area would be kept separate from the core of downtown. This would allow scooters on specific streets but the sections inside this central area would be a dismount zone. This would also allow movement of scooters from each side of the City with businesses that don't have sidewalks.

Definition of Electric Assisted Scooter – this definition is not defined in State code. It was noted this ordinance would not just apply to rentals, it would also apply to scooter purchase. This definition also includes a speed limit.
Riders – addresses the number of riders other than the operator.
Operating Upon Sidewalks – clarifies the dismount zone in the Central Downtown Area. Councilmember Freeman recommended 'passing on the left' be included in this section.
Maximum Posted Speed Limits – miles per hour (mph) on City sidewalks was removed. Parks and Recreation (P&R) could possibly post signage in congested areas.
Labeling Requirement – modified to include the Central Downtown Area.

Director Cramer expressed his concern, as a personal bike rider, riding on sidewalks and then exiting the sidewalk onto a one-way street. He believes the traffic pattern may be an issue. He is hesitant allowing these scooters on sidewalks in the Central Downtown Area. Chief Johnson believes the speed limit could be governed by the ride-share owners, although this would not apply to the personal scooter owners. He indicated there should not be a lot of expectation of speed enforcement in downtown area. Councilmember Radford questioned if regulation is required at this time, especially with a short seasonal riding period and the limited number of riders. He believes common sense of riders may be the better option. He is not in favor of an ordinance at this time although he questioned a pilot ordinance being enacted for the summer months. Councilmember Dingman concurred with Councilmember Radford. She expressed her appreciation to Councilmember Francis for his work on this ordinance. She believes this is a mode of transportation in other cities although this mode of transportation may not be necessary in this community. She also believes this ordinance may be difficult to enforce and could create conflict as the ordinance is inconsistent with other policies regarding modes of transportation. Councilmember Dingman noted the majority of riders prefer to ride on the street in a bike lane. Councilmember Francis stated the ordinance is not just for scooter riders as this ordinance must represent everyone who uses the downtown sidewalks, including business owners. He stated scooters have been abandoned in cities. He believes it is better to be strict although the ordinance could be backed off if not needed. Councilmember Dingman believes common sense will regulate the rider and the market will prevent a lot of riders. Councilmember Freeman does not want pedestrians to feel they are not safe on the sidewalks in the downtown area. He expressed his concern for these individuals. He believes individuals will regulate themselves. He is not in favor of allowing scooters on the downtown sidewalks. Councilmember Hally believes some of the downtown streets could be safe, he is in favor of the downtown restrictions. Councilmember Freeman believes, due to current downtown signage, these would be safe in the street. Councilmember Smede believes this ordinance is very comprehensive, however, she does not believe this ordinance will be read by rental riders. She also believes there are expectations of civility. Mayor Casper believes the current nuisance regulations would take care of problem areas. She also believes for most instances, this would be a mode of transportation for tourists. She expressed her concern for signage clutter and, she believes this ordinance needs to be simple. She indicated she could support a revised version of the ordinance referencing sidewalks and public nuisance. Councilmember Francis expressed his concern for inexperienced riders of any age. He believes there needs to be some regulation. Mr. Kirkham believes riders of scooters could be regulated. He stated this proposed ordinance also regulates scooter rentals. Chief Johnson stated the City does not want to be in the business of picking up scooters. Following general comments, Mr. Kirkham will amend the proposed ordinance.

Meeting Protocols:
Mayor Casper requested any changes of the current meeting schedule. There was consensus of the Councilmembers to keep the schedule as previously discussed (at the November 25, 2019 Council Work Session).

Mayor Casper stated the Council Meeting agenda memo format has been redesigned as she believes all memos should be in a consistent format. She reviewed the amended memo template including the submission and review process.

Mayor Casper stated per discussion with Councilmember Dingman, she believes there may be frustration with the Councilmembers and the open meeting rules regarding 'free time' for various discussion items. She indicated future agendas could include a Strategic Vision Discussion for general discussion time.

Mayor Casper questioned the possibility of mobile City meetings. She indicated these meetings would be held off-site and the Council would be able to have a Q&A time with residents afterward. She noted the Live Streaming would need to be explored.

Mayor Casper expressed her appreciation with the decorum at the State legislative meetings and process. She believes the Chair has the control of those individuals wishing to speak which allows an orderly process. She expressed her desire for similar decorum at City Council Meetings. The Chair of the meeting would call directors forward and, would call for votes. There is also desire to have questions presented prior to comments. Councilmember Smede expressed her appreciation for decorum. Councilmember Radford suggested the individual liaison be able to present the item as this can prepare a councilmember to be in charge of other meetings although, he believes the ritual can be helpful. General comments and discussion followed.

There being no further business, the meeting adjourned at 6:35 p.m.

CITY CLERK	MAYOR

January 30, 2020 - Unapproved

The City Council of the City of Idaho Falls met in Regular Council Meeting, Thursday, January 30, 2020, in the Council Chambers in the City Annex Building located at 680 Park Avenue in Idaho Falls, Idaho at 7:30 p.m.

Call to Order:
There were present:
Councilmember Michelle Ziel-Dingman
Councilmember Shelly Smede
Councilmember Jim Francis
Councilmember Jim Freeman
Councilmember Thomas Hally
Councilmember John Radford

Absent:
Mayor Rebecca L. Noah Casper

Also present:
All available Department Directors
Randy Fife, City Attorney
Kathy Hampton, City Clerk

Pledge of Allegiance:

Mayor Pro Tem Dingman requested Duane Nelson, Fire Chief, to lead those present in the Pledge of Allegiance.

Public Comment:

Mayor Pro Tem Dingman requested any public comment not related to items currently listed on the agenda or not related to a pending matter. No one appeared.

Consent Agenda:

The Office of the Mayor requested reappointment of Lee Radford to the Idaho Falls Redevelopment Agency.

Human Resources requested approval of Proposed Changes to the City's Personnel Manual.

The Fire Department requested approval of quote from Weidner Fire for Exhaust System at Fire Station #3.

Municipal Services requested approval of Bid IF-20-07, Purchase of 30-yard Steel Refuse Containers; Purchase Meter Inventory for Idaho Falls Power; Quote IF-20-016, Load Bank Rental for Idaho Falls Power; Quote IF-20-017, Generators for Idaho Falls Power; minutes from the January 9, 2020 Council Meeting and Executive Session; and, license applications, all carrying the required approvals.

It was moved by Councilmember Smede, seconded by Councilmember Freeman, to accept all items on the Consent Agenda according to the recommendations presented. Roll call as follows: Aye – Councilmembers Francis, Dingman, Freeman, Hally, Radford, Smede. Nay – none. Motion carried.

Regular Agenda:

Public Works

Subject: State/Local Agreement with ITD and the Local Highway Technical Assistance Council for the S. Higbee Avenue Bridge over Butte Arm Canal Replacement Project

For your consideration is a State/Local Agreement with the Idaho Transportation Department (ITD) and the Local Highway Technical Assistance Council (LHTAC) for the S Higbee Avenue Bridge over Butte Arm Canal. The purpose of this project is to replace an aging bridge on S Higbee Avenue between E 15th Street and E 16th Street over the Butte Arm Canal.

Councilmember Freeman stated the current bridge condition has prompted bus weight limitations. He stated this project was set for a future date although the funding has come forward and it will be completed earlier than anticipated. The City contributed 7.34% of the project, or, $85,241.

It was moved by Councilmember Freeman, seconded by Councilmember Radford, to approve the agreement with the Idaho Transportation Department and the Local Highway Technical Assistance Council for the S Higbee Avenue Bridge over Butte Arm Canal project and give authorization for the Mayor and City Clerk to execute the necessary documents. Roll call as follows: Aye – Councilmembers Smede, Hally, Dingman, Radford, Freeman, Francis. Nay – none. Motion carried.

Subject: Access Easement – Lots 1-2, Block 7 of the Yellowstone Addition Division No. 5

For consideration is an Access Easement for Lots 1-2, Block 7 of the Yellowstone Addition Division No. 5. The easement is being requested by Roy Cole (Executor of the Naomi J. Cole Estate) for a property access needed to accommodate a recent lot split.

Councilmember Freeman stated the lots are located near the intersection of Albany Street and Saturn Avenue and the easement has been requested to accommodate a recent lot split. He stated there is currently no access into the second lot. Director Fredericksen reiterated the area was a large single-lot and was split into two (2) lots. Due to the split, there is no access to Albany Street. He stated the intent is to grant an access easement through City property.

It was moved by Councilmember Freeman, seconded by Councilmember Radford, to approve the Access Easement and give authorization for the Mayor to execute the necessary documents. Roll call as follows: Aye – Councilmembers Hally, Francis, Radford, Dingman, Smede, Freeman. Nay – none. Motion carried.

Community Development Services

Subject: Final Plat and Reasoned Statement of Relevant Criteria and Standards, Eagle Rock Town Center Division 4

For consideration is the Final Plat and Reasoned Statement of Relevant Criteria and Standards for Eagle Rock Town Center Division 4. The Planning and Zoning Commission considered this plat at its September 5, 2017, meeting and again at its April 4 2019, meeting and recommended approval by unanimous vote. Staff concurs with this recommendation.

It was moved by Councilmember Radford, seconded by Councilmember Francis, to accept the Final Plat for Eagle Rock Town Center Division 4, and give authorization for the Mayor, City Engineer, and City Clerk to sign said Final Plat. Roll call as follows: Aye – Councilmembers Freeman, Radford, Smede, Francis, Dingman, Hally. Nay – none. Motion carried.

It was moved by Councilmember Radford, seconded by Councilmember Francis, to approve the Reasoned Statement of Relevant Criteria and Standards for the Final Plat for Eagle Rock Town Center Division 4, and give authorization for the Mayor to execute the necessary documents. Roll call as follows: Aye – Councilmembers Hally, Radford, Francis, Dingman, Smede, Freeman. Nay – none. Motion carried.

Subject: Final Plat and Reasoned Statement of Relevant Criteria and Standards, Rose Nielsen Addition, Division 101, Fourth Amended

For consideration is the Final Plat and Reasoned Statement of Relevant Criteria and Standards for Rose Nielsen Addition, Division 101, Fourth Amended. The Planning and Zoning Commission considered this plat at its November 12, 2019 and recommended approval by unanimous vote. Staff concurs with this recommendation.

It was moved by Councilmember Radford, seconded by Councilmember Francis, to accept the Final Plat for Rose Nielsen Addition, Division 101, Fourth Amended, and give authorization for the Mayor, City Engineer, and City Clerk to sign said Final Plat. Roll call as follows: Aye – Councilmembers Francis, Dingman, Freeman, Hally, Radford, Smede. Nay – none. Motion carried.

It was moved by Councilmember Radford, seconded by Councilmember Francis, to approve the Reasoned Statement of Relevant Criteria and Standards for the Final Plat for Rose Nielsen Addition, Division 101, Fourth Amended, and give authorization for the Mayor to execute the necessary documents. Roll call as follows: Aye – Councilmembers Freeman, Francis, Hally, Radford, Smede, Dingman. Nay – none. Motion carried.

Subject: Final Plat and Reasoned Statement of Relevant Criteria and Standards, Rose Nielsen Addition, Division 101, Fifth Amended

For consideration is the Final Plat and Reasoned Statement of Relevant Criteria and Standards for Rose Nielsen Addition, Division 101, Fifth Amended. The Planning and Zoning Commission considered this plat at its November 12, 2019 and recommended approval by unanimous vote. Staff concurs with this recommendation.

It was moved by Councilmember Radford, seconded by Councilmember Francis, to accept the Final Plat for Rose Nielsen Addition, Division 101, Fifth Amended, and give authorization for the Mayor, City Engineer, and City Clerk to sign said Final Plat. Roll call as follows: Aye – Councilmembers Dingman, Radford, Francis, Smede, Hally, Freeman. Nay – none. Motion carried.

It was moved by Councilmember Radford, seconded by Councilmember Francis, to approve the Reasoned Statement of Relevant Criteria and Standards for the Final Plat for Rose Nielsen Addition, Division 101, Fifth Amended, and give authorization for the Mayor to execute the necessary documents. Roll call as follows: Aye – Councilmembers Radford, Freeman, Smede, Francis, Dingman, Hally. Nay – none. Motion carried.

Subject: Public Hearing – Resolution adopting the City Core Master Plan and Implementation Strategy

For consideration is a Resolution adopting the City Core Master Plan and Implementation Strategy. This document replaces the Downtown Master Plan and includes the full text of that plan as well as a new section covering the South Downtown area. Though completed as separate projects, the staff and steering committee felt the documents should be combined to reduce confusion and emphasize the interrelatedness of the various districts that make up the City's geographic core. The final product is the result of many hours of work completed in partnership between the City and community members, the project's steering committee, the Greater Idaho Falls Association of Realtors, Idaho Smart Growth, and Compass Academy. The Planning and Zoning Commission considered this plan at its November 12, 2019, meeting and recommended approval by a 5-1 vote. Staff concurs with this recommendation.

Mayor Pro Tem Dingman opened the public hearing and ordered all items presented be included in the record.

Community Development Services (CDS) Director Brad Cramer stated this document is new but it incorporates the previously adopted Downtown Master Plan. The two (2) documents are being combined to recognize downtown is not an island but rather the City's geographic core, it has historic and geographic connections to the roadway network, and, it should not be considered in isolation. Director Cramer expects the document to grow as the infrastructure grows. He stated a lot of work was put into the document and he commended staff and community partners for their effort. Director Cramer highlighted the following: many sections were unified as possible – Chapters One (1), Four (4), and, Five (5) are remnants of the Downtown Plan; Chapters Two (2), Three (3), and, the appendix are South Downtown specifics. He also noted the key initiatives to carry on the Downtown Plan. He stated community members were concerned with connectivity, economic conditions, and, urban design. These three

(3) initiatives are focused within the projects. Previous attempts have been made to try things in a smaller, more inexpensive way versus investing millions of dollars. Director Cramer stated the conceptual plan will give principle and, provides form-based code when promoting to developers or revitalization. He noted the last few pages identify place types which will later become sub-districts which will have their own set of standards so as development occurs the important things are preserved.

Councilmember Radford stated he is amazed how much has been implemented from the core Downtown Plan. He also recognized students from Compass Academy for their work. Director Cramer stated the two (2) things to remember in terms of implementation: 1-this happens slowly over time with the Idaho Falls Redevelopment Agency (IFRdA) and, it's important to have partners. He stated they will continue to talk with developers. 2-one (1) of the projects will set up a neighborhood association plan. The City has a role, which plays well, but for the neighborhood plan those who live and do business there know better. The downtown framework works well due to the Idaho Falls Downtown Development Corporation (IFDDC) and, a similar plan would work well for the South Downtown Plan. To the response of Councilmember Smede, Director Cramer stated pre-meetings were held with the neighborhood prior to the open house to focus on the neighborhood. He noted those were the best attended meetings. He believes individuals were listened to after attending the pre-meetings. He also noted the steering committee included residents and businesses from the neighborhood who were involved more than normal. Councilmember Hally stated this is a vision and indication for future implementation without using tax dollars. He also stated the IFRdA just closed a district and the downtown area was included in the district in 2005. He noted the Bonneville Hotel is also part of the downtown district. Councilmember Hally stated the closure of districts frees up taxation revenue to different entities. He also stated the IFRdA Board will look at other areas to implement changes and development with partners. He believes this would be a high-priority area. Councilmember Francis believes this plan is flexible and creative. He applauds how it synthesizes previous planning, he is pleased it was not rejected or ignored, it identities obstacles, and, he is impressed by the amount of work. Councilmember Freeman congratulated CDS staff and noted the community should be proud of the quality of the work and the consideration for keeping the historic nature of this neighborhood. Councilmember Dingman believes this is an inspiring document with character and vision as it provides ideas that developers have not previously seen.

Mayor Pro Tem Dingman requested any public comment. No one appeared. Mayor Pro Tem Dingman closed the public hearing.

Councilmember Radford stated he is proud of CDS and the relevant partners without using taxpayer money. He noted a social infrastructure piece is included in the South Downtown Plan.

It was moved by Councilmember Radford, seconded by Councilmember Francis, to approve the Resolution adopting the City Core Master Plan and Implementation Strategy, and give authorization for the Mayor and City Clerk to execute the necessary documents. Roll call as follows: Aye – Councilmembers Hally, Smede, Dingman, Freeman, Francis, Radford. Nay – none. Motion carried.

RESOLUTION NO. 2020-01

A RESOLUTION OF THE CITY OF IDAHO FALLS, IDAHO, A MUNICIPAL CORPORATION OF THE STATE OF IDAHO, ADOPTING A CITY CORE MASTER PLAN AND IMPLEMENTATION STRATEGY; AND PROVIDING THAT THIS RESOLUTION BE EFFECTNE UPON ITS PASSAGE AND APPROVAL ACCORDING TO LAW.

Announcements: There were no announcements.

Adjournment:

There being no further business, the meeting adjourned at 8:03 p.m.

CITY CLERK	MAYOR

IDAHO FALLS

MEMORANDUM

FROM: Duane A Nelson; Fire Chief

DATE: Friday, February 7, 2020

RE: Approval for Modification of City Ordinance, Title 7 Chapter 10 and Title 4 Chapter 17

Council Action Desired

☒ Ordinance ☐ Resolution ☐ Public Hearing

☐ Other Action (Approval, Authorization, Ratification, etc)

Approval for the modification of the City Ordinance Title 7, Chapter 10 and addition of Title 4, Chapter 17 to establish a requirement for Business License pursuant to the International Fire Code.

Description, Background Information & Purpose

The risk to the public and emergency personnel of the City of Idaho Falls can be considerably lessened when emergency response personnel have current and accurate information about the conditions, conduct, and operations of a business during an emergency response. This ordinance will allow the Fire Department Prevention Division to better identify, inspect and verify that the accurate use, permits, and maintenance is being performed within these properties.

Relevant PBB Results & Department Strategic Plan

☐ ☒ ☐ ☐ ☐ ☒ ☐ ☐

This ordinance supports the community-oriented results of government and providing for a safe and secure community.

Interdepartmental Coordination

Worked with Legal and Economic Development to establish these changes.

Fiscal Impact

N/A

Legal Review

This ordinance modification has been drafted and reviewed by the City Attorney Office.

ORDINANCE NO. _____

AN ORDINANCE OF THE CITY OF IDAHO FALLS, IDAHO, AMENDING CHAPTER 10, TITLE 7 OF THE CITY CODE; ADDING CHAPTER 17 TO TITLE 4 OF THE CITY CODE TO ESTABLISH A REQUIREMENT FOR BUSINESSES LICENSED PURSUANT TO THE INTERNATIONAL FIRE CODE TO REGISTER WITH THE CITY CLERK; PROVIDING SEVERABILITY, CODIFICATION, PUBLICATION BY SUMMARY, AND ESTABLISHING EFFECTIVE DATE.

WHEREAS, Idaho Code § 50-307 authorizes the City to regulate businesses within the City and levy and collect business regulation fees; and

WHEREAS, the Council desires to ensure the safety of the public from fire and other public nuisances; and

WHEREAS, emergency and fire responses are inherently risky and dangerous to both the public and the City's professional firefighters; and

WHEREAS, the risk to emergency public safety employees can be considerably lessened when emergency responders have current and accurate information about the conditions at the scene of an emergency and have an accurate contact for the owner or operator of a business to receive real-time information about the unique and specific conditions that may exist at the scene of the emergency.

NOW, THEREFORE, BE IT ORDAINED BY THE MAYOR AND COUNCIL OF THE CITY OF IDAHO FALLS, IDAHO, THAT:

SECTION 1. Chapter 10, of Title 7 of the City Code of the City of Idaho Falls, Idaho, is hereby amended as follows:

7-10-3: AMENDMENTS AND ADDITIONS TO THE INTERNATIONAL FIRE CODE

. . .

(A). Subsection of 105.1.1 Permits required shall be adopted as follows:

105.1.1

A property owner or owner's authorized agent who intends to conduct an operation or business, or is currently conducting or operating a business, or install or modify systems and equipment that are regulated by this Code, or to cause any such work to be

performed, shall first make application to the Fire Code Official and obtain the required permit. Businesses regulated by this Code shall also register their business with the Clerk.

(B~~A~~). Subsection of 105.1.2 Types of permits shall be adopted as follows:

Permit Fees:

105.1.2.1 Each operational permit fee shall be in an amount set from time to time by Resolution of the Council;
105.1.2.2 Each construction permit fee shall be in an amount set from time to time by Resolution of the Council; and,

105.1.3 Where multiple permits are required for the same location, the Fire Code Official may authorize to consolidate such permits into one permit.

113.3 Failure to obtain any require fire code permit, prior to engaging in activities, operations, practices or functions, as set forth in the International Fire Code, shall constitute a violation of the code. The activity, operation, or practice will be issued a stop work order until a permit has been obtained and a double permit fee collected.

(C~~B~~) Subsection 105.7.1 Automatic fire-extinguishing systems shall be amended to read as follows:

A construction permit and Life Safety License is required for the installation of or modification to an automatic fire extinguishing system. Maintenance performed in accordance with this code is not considered a modification and does not require a permit.

1. Contractors performing maintenance on automatic fire-extinguishing systems shall obtain a Life Safety License prior to commencing work and shall provide a copy of the maintenance report to the Fire Code Official at the completion of the work performed.

2. The Fire Code Official is authorized to not require a plan review fee for modifications to automatic fire-extinguishing systems where ten (10) or fewer sprinkler heads are affected in the scope of work. A Life Safety License and permit are required to be submitted to the Fire Code Official for review prior to the start of the project and a record of completion shall be permitted to the Fire Code Official at the completion of the project.

(D~~C~~) Subsection 105.7.6 Fire alarm and detection systems and related equipment shall be amended to read as follows:

A construction permit and Life Safety License is required for installation of or modification to fire alarm and detection systems and related equipment. Maintenance performed in accordance with this code is not considered a modification and does not require a permit.

1. Contractors performing maintenance on fire alarm and detections systems shall obtain a Life Safety License prior to commencing work and shall provide a copy of the maintenance report to the Fire Code Official at the completion of the work performed.

(E~~D~~) Subsection 105.7.7 Fire pumps and related equipment shall be amended to read as follows:

A construction permit and Life Safety License is required for installation of or modification to fire pumps and related fuel tanks, jockey pumps, controllers, and generators. Maintenance performed in accordance with this code is not considered a modification and does not require a permit.

1. Contractors performing maintenance on fire pumps and related equipment shall obtain a Life Safety License prior to commencing work and shall provide a copy of the maintenance report to the Fire Code Official at the completion of the work performed.

(F~~E~~) Subsection 109.4 Violation penalties shall be amended to read as follows:

Persons or entities who violate a provision of this code or shall fail to comply with any of the requirements thereof or who shall erect, install, alter, repair or do work in violation of the approved construction documents or directive of the Fire Code Official, or of a permit or certificate used under the provisions of this code, as amended, shall be guilty of a misdemeanor. Each twenty-four (24) hour period that a violation continues after due notice has been served shall be deemed a separate offense.

(G~~F~~) Subsection 111.4 Failure to comply shall be amended to read as follows:

Any person who shall continue any work after having been served with a stop work order, except such work as that person is directed to perform to remove a violation or unsafe condition, shall be liable to pay a fine in an amount set from time to time by Resolution of the Council.

(H~~G~~) Subsection 113.6 Life Safety License required shall be adopted as follows:

Any person or entity shall obtain a Life Safety License from the Fire Code Official prior to performing any installation, modification, inspection, testing, or maintenance on a Life

Safety System in the City of Idaho Falls. Life Safety Licenses shall be valid for the calendar year issued. The fee for a Life Safety License shall be in an amount set from time to time by Resolution of the Council. All Life Safety Licenses shall be non-transferrable.

(I~~H~~) Subsection 113.7 Penalties for violation of license requirement shall be adopted as follows:

Any person or entity who violates any rules or regulations as written on the license application, shall be guilty of a misdemeanor and upon conviction shall be punished by a fine of not more than three-hundred dollars ($300). Each twenty-four (24) hour period that a violation continues after due notice has been served shall be deemed a separate offense.

(J~~I~~) Subsection 113.8 Payment of permits, licenses and fees shall be adopted as follows:

All costs, fees, and payments associated with any permit or license provided for in the Fire Code shall be paid to the City of Idaho Falls City Treasurer's Office or as otherwise specified by the Fire Department.

(K~~J~~) Subsection 113.9 Fees shall be adopted as follows:

113.9.1 Structural plan review fees. Structural plan review fees will be charged at a rate in an amount set from time to time by Resolution of the Council. Upon request from the Fire Code Official, the City reserves the right to charge additional structural plan review fees for large or complex structural plan submissions.

113.9.2 Fire alarm plan review fees. Fire alarm plan review fees will be charged at a rate in an amount set from time to time by Resolution of the Council. This fee includes plan review and one (1) acceptance test field inspection by fire prevention personnel. An additional fee, in an amount set from time to time by Resolution of Council, will be charged for inspection of fire alarm systems exceeding this amount.

113.9.3 Fire sprinkler system plan review fees. Fire sprinkler system fees will be charged at a flat rate in an amount set from time to time by Resolution of the Council. This fee includes plan review, and one (1) acceptance field inspection. Field inspections are to include fire service underground, rough-in inspection, hydro-test with all heads in place, and final acceptance test of system. An additional fee, in an amount set from time to time by Resolution of Council, will be charged for inspection of fire sprinkler systems exceeding this amount.

113.9.4 Fire pump review fees. Fire pump fees will be in an amount set from time to time by Resolution of the Council. This fee includes plan review and response and acceptance testing of the fire pump.

113.9.5 Alarm response fee. The Fire Code Official is authorized to charge a maximum fee in an amount set from time to time by Resolution of the Council per occurrence for fire apparatus response to Life Safety System activation where the service contractor fails to contact the Fire Code Official and/or Fire Dispatch Center when servicing such systems or excessive responses to the same location. The fee does not apply to a false alarm which is defined as the willful and knowing initiation or transmission of a signal, message or other notification of an even of fire when no such danger exists. The fee, subject to review by the Fire Code Official will apply to nuisance alarms exceeding four (4) responses to the same location within a thirty (30) day period. Nuisance alarms are defined as any alarm caused by mechanical failure, malfunction, improper installation, or lack of proper maintenance, or any alarm activated by a cause that cannot be determined. The fee will be charged to the business owner and/or service contractor after review by the Fire Code Official

(L~~K~~) Subsection 5604.1.1 Prohibited storage shall be adopted to read as follows:

The storage of explosives and blasting agents is prohibited within the Corporate Limits of the City of Idaho Falls.

Exception: The Fire Code Official may issue a permit, pursuant to Section 105, to allow the use of explosives and blasting agents within the Corporate Limits of the City of Idaho Falls. Such permit shall prescribe conditions and restrictions for the use of explosives and blasting agents, consistent with this chapter.

(M~~L~~) Subsection 5704.2.9.6.1 Locations where above-ground tanks are prohibited shall be amended to read as follows:

The storage of Class I and Class II liquids in above-ground tanks outside of buildings is prohibited within the Corporate Limits of the City of Idaho Falls.

Exceptions:

1. The Fire Code Official, with approval of the Fire Chief, may allow protected above-ground tanks at motor vehicle fuel dispensing stations. Protected above-ground tanks may be allowed where underground rock formations or water levels make it extremely difficult or impossible to install underground tanks or underground install is cost prohibitive for limited use fuel dispensing stations. Such tanks shall meet the UL 2085 listing and comply with Sections 2306.2, 3104.17.2, 5704.2.7.3.5, 5704.2.9, and 5704.2.13.2. Each approved tank shall not exceed twelve thousand (12,000) gallons in individual capacity and no more than forty-eight thousand (48,000) gallons in aggregate capacity may be stored in this manner on any one property within the City.

2. The Fire Code Official, with approval of the Fire Chief, may allow the use of temporary above-ground storage tanks at construction sites, earth moving projects or gravel pits. Such tanks shall comply with Sections 3104.17.2, 5704.2.9, and Section 5706 in its entirety.

2.1 The storage of flammable or combustible liquids in above-ground tanks, and the dispensing of combustible liquids into vehicles from above-ground tanks, shall not be permitted in the following zones as defined by the City Zoning Ordinance and located within the current Official Zoning Map: RP, RP-A, R-1, R-2, R-2A, R-3, R-3A, P-B, and RMH.

(N~~M~~) Subsection 5706.2.4.4 Locations where above-ground tanks are prohibited shall be amended to read as follows:

The limits in which new bulk plants in accordance with Section 5706.2.4.4, where flammable or combustible liquids are received by tank vessels, pipelines, tank cars, or tank vehicles, and are stored in blended in bulk for the purpose of distributing such liquids by tank vessels, pipelines, tank cars, tank vehicles, or containers are prohibited within the Corporate Limits of the City of Idaho Falls.

(O~~N~~) Section 5806.2 Limitations shall be amended to read as follows:

Storage of flammable cryogenic fluids in stationary containers outside of buildings is prohibited within the Corporate Limits of the City of Idaho Falls.

(P~~O~~) Section 6104.2.1 Restricted zones shall be adopted as follows:

Storage of liquefied petroleum gas is restricted within all zones in the City, as defined by the City Zoning Ordinance and located within the current City's Official Zoning Map.

Exception: Storage of liquefied petroleum gas is permitted, consistent with this chapter, within the Industrial and Manufacturing Zones I&M-1 and I&M-2, as defined by the City Zoning Ordinance and located within the current City's Official Zoning Map.

SECTION 2. Chapter 17, of Title 4 of the City Code of the City of Idaho Falls, Idaho, is hereby added as follows:

4-17-1: DEFINITIONS – Certain words and phrases used in this Chapter are defined as follows

ENGAGING IN BUSINESS - the practice of engaging in commerce with the object of gain, profit, benefit, or advantage.

FIRE CODE - the International Fire Code, as currently adopted by the City.

FIRE CODE PERMIT – A permit issued by the Idaho Falls Fire Department pursuant to the requirements of the Fire Code.

4-17-2: REQUIREMENT TO REGISTER BUSINESSES REQUIRING A FIRE CODE PERMIT: Any person, partnership, corporation, or other legal entity intending to engage or actually engaging in any business which requires a Fire Code Permit shall register with the Clerk. Registration shall be valid for a consecutive period of twelve (12) months. Separate registrations shall be required for each outlet, branch, location, or place of business within the City that requires a Fire Operational Permit.

4-17-3: REGISTRATION FORM: The Clerk shall prescribe a registration form. The registration form shall include, at a minimum,

(A) the registered business owner's name, email address, and residential and emergency phone numbers,
(B) the name of the registered business,
(C) the specific Fire Code Permit required by the registered business,
(D) the form of the registered business (i.e. sole proprietorship, partnership, or corporation),
(E) the street address of the registered business,
(F) name, telephone number, and email address for the registered business's contact person (if other than the business's owner),
(G) the zoning of the property on which the registered business will be conducted,
(H) provide a copy of the registered businesses Certificate of Fire Insurance,
(I) the registration's expiration date, and
(J) any other information deemed by the Clerk to be necessary to keep an accurate registry of businesses.

The Clerk shall also prepare a description of the businesses which require a Fire Operational Permit and shall publish the description on the City's website and maintain a copy for public inspection in the Clerk's office.

4-17-4: BUSINESS REGISTRATION FEE: All businesses required to register under this Chapter shall pay an registration fee in an amount set from time to time by Resolution of the Council at the time of registration.

4-17-5: RENEWAL: Prior to expiration of a business's registration, all businesses required to register under this Chapter must renew the business registration by confirming with the Clerk that the registration on file is current and pay a registration fee set from time to time by Resolution of the Council.

4-17-6: REGISTRATION NONTRANSFERABLE: No business registration issued pursuant to this Chapter shall be automatically transferred to a new owner. A new business registration shall be required in the event of a change in business ownership.

4-17-7: DUTY TO UPDATE LOCATION: In the event that a registered business relocates from its registered location, a business owner shall be required to contact the Clerk and update the business's registration with the new location. There shall be no fee imposed for updating a registered business's location.

4-17-8: EXEMPTIONS: The requirements of this Chapter shall not apply to any governmental entity.

4-17-9: FAILURE TO REGISTER: Any person or entity which

(A) fails to register a Business requiring a Fire Code Permit,
(B) provides a false statement contained in the registration, or
(C) otherwise fails to comply with the requirements of this Chapter

shall be guilty of a misdemeanor, punishable by a fine set from time to time by Resolution of the Council or imprisonment for not more than one (1) year, or by both such fine and imprisonment for any single violation.

SECTION 3. Savings and Severability Clause. The provisions and parts of this Ordinance are intended to be severable. If any section, sentence, clause, or phrase of this Ordinance should be held to be invalid or unconstitutional by a court of competent jurisdiction, such invalidity or unconstitutionality shall not affect the validity or constitutionality of any other section, sentence, clause, or phrase of this Ordinance.

SECTION 4. Codification Clause. The City Clerk is instructed to immediately forward this Ordinance to the codifier of the official municipal code for proper revision of the Code.

SECTION 5. Publication. This Ordinance, or a summary thereof in compliance with Idaho Code, shall be published once in the official newspaper of the City, and shall take effect immediately upon its passage, approval, and publication.

SECTION 6. Effective Date. This Ordinance shall be in full force and effect from and after its passage, approval, and publication. (May 1, 2020)

PASSED by the City Council and APPROVED by the Mayor of the City of Idaho Falls, Idaho, this _____ day of _____, 2020.

CITY OF IDAHO FALLS, IDAHO

_____

REBECCA L. NOAH CASPER, MAYOR

ATTEST:

_____
KATHY HAMPTON, CITY CLERK

(SEAL)

STATE OF IDAHO)
) ss:
County of Bonneville)

I, KATHY HAMPTON, CITY CLERK OF THE CITY OF IDAHO FALLS, IDAHO, DO HEREBY CERTIFY:

> That the above and foregoing is a full, true and correct copy of the Ordinance entitled, "AN ORDINANCE OF THE CITY OF IDAHO FALLS, IDAHO, AMENDING CHAPTER 10, TITLE 7 OF THE CITY CODE; ADDING CHAPTER 17 TO TITLE 4 OF THE CITY CODE TO ESTABLISH A REQUIREMENT FOR BUSINESSES LICENSED PURSUANT TO THE INTERNATIONAL FIRE CODE TO REGISTER WITH THE CITY CLERK; PROVIDING SEVERABILITY, CODIFICATION, PUBLICATION BY SUMMARY, AND ESTABLISHING EFFECTIVE DATE."

(SEAL) _____
KATHY HAMPTON, CITY CLERK

IDAHO FALLS

MEMORANDUM

FROM: Pam Alexander, Municipal Services Director

DATE: Wednesday, February 5, 2020

RE: Haul and Spread of Liquid Wastewater Bio-Solids for Public Works

Council Action Desired

☐ Ordinance ☐ Resolution ☐ Public Hearing

☒ Other Action (Approval, Authorization, Ratification, etc)

Authorization to enter into the open market (or take other action deemed appropriate) to contract for haul and spread of liquid wastewater bio-solids services for Public Works.

Description, Background Information & Purpose

Bid IF-20-09 was published and did not receive any bidders. To maintain compliance with Idaho Department of Environmental Quality (IDEQ) discharge permit requirements, Public Works must have the ability to haul and spread liquid wastewater bio-solids. The estimated amount to haul as stated in the bid invitation was 145,000 gallons. With no bids received, Public Works is requesting the authorization to enter into the open market.

Relevant PBB Results & Department Strategic Plan

☐ ☐ ☐ ☐ ☐ ☐ ☒ ☐

The haul and spread of liquid wastewater bio-solids supports the environmental sustainability community-oriented result as it allows Public Works to meet discharge permit requirements and assists local farmers with an alternative source from chemical fertilizer.

Interdepartmental Coordination

Municipal Services and Public Works coordinated the issuance of the request for bid and the recommendation to enter into the open market for the service.

Fiscal Impact

Funds for the haul and spread services are budgeted within the Public Works 2019/20 Treatment Plan Operation and Maintenance sludge removal budget line item.

Legal Review

Legal has reviewed the bid process and concurs the council action desired is within State Statute.

IDAHO FALLS

MEMORANDUM

FROM: Chris H Fredericksen, Public Works Director

DATE: Monday, February 3, 2020

RE: Approval for Modification of City Sewer Ordinance, Title 8, Chapter 1

Council Action Desired

☒ Ordinance ☐ Resolution ☐ Public Hearing

☐ Other Action (Approval, Authorization, Ratification, etc)

Approval for the modification of the City Sewer Ordinance, Title 8, Chapter 1 to incorporate suggestions made by the Idaho Department of Environmental Quality, under a suspension of the rules requiring three complete and separate readings and request that it be read by title and published by summary (or consider the Ordinance on the first reading and that it be read by title, or reject the Ordinance).

Description, Background Information & Purpose

Attached for consideration are proposed modifications to City Sewer Ordinance, Title 8, Chapter 1. The Idaho Department of Environmental Quality (IDEQ) has recently taken over the duties of primacy of wastewater discharges in Idaho from the US Environmental Protection Agency (EPA). This past year was the first that IDEQ staff completed Pretreatment Program inspections and as part of those inspections, IDEQ requested several changes to our Sewer ordinance. Public Works staff have worked with IDEQ and our Legal Department to accommodate those changes and to update the ordinance.

Relevant PBB Results & Department Strategic Plan

☐ ☒ ☐ ☐ ☐ ☐ ☐ ☐

This ordinance supports the community-oriented results of good governance though compliance with state law.

Interdepartmental Coordination

Public Works staff have worked with our Legal Department to accommodate those changes and to update the ordinance.

Fiscal Impact

N/A

Legal Review

This ordinance modification has been reviewed by the City Attorney.

ORDINANCE NO. _____

AN ORDINANCE OF THE CITY OF IDAHO FALLS, IDAHO, AMENDING TITLE 8, CHAPTER 4, OF THE IDAHO FALLS CITY CODE TO CONFORM THE SEWER ORDINANCE TO IDAHO DEPARTMENT OF ENVIRONMENT QUALITY ADMINISTRATIVE JURISDICTION; AMENDING RELATED DEFINITIONS, PROCESSES, AND PENALTIES; PROVIDING SEVERABILITY, CODIFICATION, PUBLICATION BY SUMMARY, AND ESTABLISHING EFFECTIVE DATE.

WHEREAS, the City of Idaho Falls owns and operates a Wastewater Treatment Plant to serve businesses and residents; and

WHEREAS, the operation of the Wastewater Treatment Plant is subject to a National Pollution Discharge Elimination System (NPDES) Permit originally issued by the U.S. Environmental Protection Agency; and

WHEREAS, the Idaho Department of Environmental Quality (IDEQ) recently assumed administration responsibility of the City's NPDES Permit; and

WHEREAS, a recent NPDES Permit inspection resulted in IDEQ-recommended changes to the City's sewer Ordinance to clarify IDEQ Administration authority and NPDES Permit compliance language; and

WHEREAS, further review of the City's sewer Ordinance suggests the need for additional changes and clarifications to better align with current treatment and administration policies.

NOW, THEREFORE, BE IT ORDAINED BY THE MAYOR AND COUNCIL OF THE CITY OF IDAHO FALLS, IDAHO, THAT:

SECTION 1. Title 8, Chapter 1, of the City Code of the City of Idaho Falls, Idaho, is hereby amended as follows:

8-1-1: PURPOSE: This Chapter sets forth uniform requirements for Users of the POTW for the City of Idaho Falls and enables the City to comply with all applicable State and Federal laws including the Clean Water Act and the General Pretreatment Regulations (40 CFR, Part 403). The objectives of this Chapter are:

. . .

8-1-2: DEFINITION OF TERMS: Certain terms used in this Chapter shall have the meanings herein given to them:

. . .

APPROVAL AUTHORITY: ~~The Regional Administrator of the Idaho Pollutant Discharge Elimination System Program (IPDES), Region 10~~Idaho Department of Environmental Quality.

. . .

CATEGORICAL PRETREATMENT STANDARD~~ OR CATEGORICAL STANDARD~~: Any regulation containing pollutant discharge limits promulgated by the U.S. EPA in accordance with Sections 307(b) and (c) of the Act (33 U.S.C. 1317) which apply to a specific category of Users and which appear in 40 CFR Chapter I, Subchapter N, Parts 405-471.

. . .

CLEAN WATER ACT (the Act): The Clean Water Act of 1977, as codified in 33 USC Section 1251 et seq.

. . .

COMPOSITE SAMPLE: The sample of wastewater resulting from the combination of individual wastewater samples taken at selected intervals based on an increment of either flow or time.

CONTROL AUTHORITY: Public Works Department.

. . .

~~ENVIRONMENTAL PROTECTION AGENCY: The United States Environmental Protection Agency or, where appropriate the Director of the Region 10 Office of Water and Watersheds or other duly authorized official of said agency.~~

. . .

GRAB SAMPLE: ~~An individual sample collected over a period of time~~A sample of wastewater taken over a period of time not ~~not~~ exceeding fifteen (15) minutes.

. . .

SEWER ~~SERVICE~~ LINE: A pipe or conduit for conveying wastewater.

. . .

8-1-3: ABBREVIATIONS: The following abbreviations shall have the designated meanings:

ASPP:	Accidental Spill Prevention Plan
BOD:	Biochemical Oxygen Demand
CFR:	Code of Federal Regulations
COD:	Chemical Oxygen Demand
EPA:	U.S. Environmental Protection Agency
GPD:	Gallons per day
IPDES:	Idaho Pollutant Discharge Elimination System
IWA:	Industrial Waste Acceptance
l:	Liter
LEL:	Lower Explosive Limit
mg:	Milligrams
mg/l:	Milligrams per liter
NPDES:	National Pollutant Discharge Elimination System
O&M:	Operations and Maintenance
POTW:	Publicly Owned Treatment Works
RCRA:	Resource Conservation and Recovery Act
SIC:	Standard Industrial Classifications
SIU:	Significant Industrial User
WWTP:	The Wastewater Treatment Plant
SWDA:	Solid Waste Disposal Act (42 U.S.C. § 6901, et seq.)
TSS:	Total Suspended Solids
USC:	United States Code

. . .

8-1-9: NATIONAL PRETREATMENT STANDARDS: PROHIBITED DISCHARGES:

(A) General Prohibitions: No User shall introduce or cause to be introduced into the POTW any pollutant or wastewater which causes pass through or interference. These general prohibitions apply to all Users of the POTW whether or not they are subject to categorical pretreatment standards or any other national, state or local pretreatment standards or requirements.

(B) Specific Prohibitions: No User shall introduce or cause to be introduced into the POTW the following pollutants, substances or wastewater:

(1) Pollutants which create a fire or explosive hazard in the POTW, including, but not limited to, wastestreams with a closed-cup flashpoint of less than 140 degrees F (60 degrees C) using the test methods specified in 40 CFR 261.21;

(2) Wastewater having a pH less than ~~5.5~~ 6.5 or more than 9.0, or otherwise causing corrosive structural damage to the POTW or equipment in the WWTP;

. . .

(5) Wastewater having a temperature which will inhibit biological activity in the WWTP resulting in interference, but in no case wastewater which causes the temperature at the introduction into the WWTP plant to exceed ~~104EF~~ 104 degrees F (~~40EC~~40 degrees C) unless the Director approves alternate temperature limits in writing;

. . .

(15) Wastewater causing, ~~along~~ alone or in conjunction with other sources, the WWTP's effluent to fail a toxicity test;

. . .

8-1-15: SPECIAL AGREEMENTS: City reserves the right to enter into special agreements with Users setting out special terms under which they may discharge to the POTW. In no case will a special agreement waive compliance with a categorical pretreatment standard or federal pretreatment requirement. However, the User may request a net gross adjustment to a ~~c~~Categorical ~~s~~Standard in accordance with 40 CFR 403.15. They may also request a variance from the categorical pretreatment standard from the approval authority in accordance with 40 CFR 403.13.

8-1-16: APPROVAL REQUIRED FOR WASTEWATER: No User shall discharge wastewater into the POTW without having first filed an application with the Director and having obtained a permit to discharge wastewater into the POTW. At the time of such application, the applicant shall provide sufficient information concerning the nature, concentration and quantity of their waste or such other information as may be reasonably necessary for the Director to assure compliance with this Chapter. Upon receipt of said application, the Director shall review the same and if necessary, inspect the property and facilities of the applicant to determine if said facilities are in compliance with the provisions of this Chapter. Upon making such determination, the Director shall forthwith issue a permit to the applicant authorizing discharge of waste to the public sewer. All significant industrial Users shall in addition comply with the provisions of ~~Sections 8-1-33 through 8-1-46 of~~ this Chapter. Such permit may be issued upon conditions reasonably necessary to assure compliance with this Chapter, including, but not limited to, the following:

(A) Limits on the average and maximum wastewater constituents and characteristics;

(B) Limits on average and maximum rate and time of discharge or requirements for flow regulations and equalization;

(C) Requirements for installation and maintenance of inspection and sampling facilities;

(D) Conditions concerning sampling locations, frequency of sampling, number, types and standards for tests and a reporting schedule therefor;

(E) Compliance schedules;

(F) Periodic submission of technical reports or other discharge reports necessary to determine compliance with this Chapter, and the frequency of monitoring of the discharge;

(G) Any other condition reasonably necessary to assure compliance with this Chapter.

(H) Statement of Permit Duration.

~~(G)~~(I) Statement of Nontransferability.

. . .

8-1-21: CONNECTION TO SANITARY SEWER REQUIRED: Every building or structure located within the City and from which any wastewater is discharged shall be connected to the public sanitary sewer if such sewer is within two hundred feet (200') of such building or structure, unless otherwise approved by Public Works. All connections to the sewer shall be made at the expense of the owner or person having control thereof. ~~Any person who fails to make such connection within ninety (90) days after receiving a notice from City advising them of the availability of the sewer, shall be guilty of a misdemeanor.~~

. . .

8-1-23: SEWER SERVICE CONNECTION FEES:

(A) Permits Required: No person shall install or alter any sanitary sewer within the City, or tap onto or connect to any sanitary sewer line, whether lateral, main or interceptor, without first obtaining a permit from City.

(B) Sewer Connection Fees: Before any permit is issued for the installation or alteration of any sanitary sewer or before any connection is made to any sanitary sewer line, whether lateral, main or interceptor, the applicant shall pay to City a sewer connection fee in an amount set from time to time by Resolution of the Council. ~~, for the following:~~

- ~~Single Family Dwelling;~~
- ~~Mobile Home Courts or Mobile Home Subdivisions;~~
- ~~Motels, Hotels, Boarding Houses, Travel Trailer Courts;~~
- ~~Trailer Courts;~~

- ~~Apartment Houses, Duplexes, Triplexes, Condominiums and similar living units; and~~
- ~~Commercial Buildings~~

~~(C) A separate sewer connection permit must be obtained for each building or trailer court or cabin court using the sanitary sewer system of City, and except as otherwise provided herein, the service connection fee must be paid whenever a plumbing permit is required by City. Once the required sewer service connection fee has been paid for any building connected to the POTW, no further connection fee shall be charged for the connection of any sewer serving any building constructed or reconstructed at the same place, or so near the same place that no substantial extension of the original side sewer is necessary to serve it. If a connection permit was issued after January 1, 1958, the connection fee is deemed to have been paid. In all other cases, proof of payment of the fee shall be furnished by the applicant, and in the absence of such proof, a connection fee shall be charged~~. Where an existing structure/connection is modified, the fee charged shall be based on the modification. ~~.~~

~~(D)~~(C) Sewer Main Connection Charge. Before connecting to any sewer main constructed in whole or in part at City expense, all persons desiring such connection shall pay a sewer main connection fee in an amount set from time to time by Resolution of the Council per front foot of property owned by such person and fronting upon a street, or public right of way or easement within which a sewer main is located. Despite the foregoing, if any person requests annexation to the City and as part of such annexation also requests connection to such sewer main, then the fee shall be due in full at the time such property is annexed to City. If any such property is located upon a corner or is bounded by two or more streets in which a sewer main is located, the calculation for the fee shall be based upon the frontage of the longest street in which a sewer main is located. All sewer mains within City shall be deemed to have been constructed in whole or in part at City expense, unless the applicant presents written evidence conclusively demonstrating such main was constructed entirely from private monies or was constructed entirely with funds from a state or federal grant. If any person constructs a sewer main entirely at their expense, City may, by written agreement, pay over to such person all sewer main connection fees collected by City from any other person who subsequently connects to such sewer main.

~~(E)~~(D) Sanitary Sewer Capital Improvement Fund: There is hereby established a Sanitary Sewer Capital Improvement Fund to be supervised and managed by City Treasurer. All sewer service connection fees and sewer main fees collected under this Chapter shall be deposited into said Fund and shall be distributed only for the purposes set forth below.

~~(F)~~(E) Disbursement of Funds: Disbursements may be made from the Sanitary Sewer Capital Improvement Fund for the following purposes only:

(1) Capital improvements to the sanitary treatment facilities.

(2) Extensions to the sanitary sewer system, including lateral, mains and interceptors.

(3) Payment of principal and interest on any general obligation or revenue bond or bonds issued by the City to defray the cost of construction, extension or improvement of the sanitary sewer system.

(4) Reimbursement of sewer main fees to a developer who has constructed a sewer main or any portion thereof for which sewer main fees have been collected from any other property owner served by such sewer main.

. . .

8-1-25: PERMIT REQUIRED TO WORK ON PUBLIC SEWER: No person shall uncover, disturb, construct, repair, or extend any part of the public sewer or any private sewer located within a public ~~row~~ right of way without first obtaining a sewer service excavation permit. No person shall extend any private sewer or sewer service beyond the limits of the building or property for which a permit has been given without obtaining a permit for the desired extension. The issuance of a sewer service permit shall not be construed to permit any work for which a public right of way excavation permit is required by this Code.

8-1-26: NOTICE OF INSPECTION: No person shall make a new connection to any ~~public~~ sewer without first giving advance notice ~~to the Director at least five (5) hours prior to the time of making such connection, provided however if such connection is located within a public right-of-way, no further notice shall be required beyond~~pursuant to the ~~the~~ requirements of ~~Section 8-7-2 of~~ this Code. Notices given on any Saturday or legal holiday will not be accepted. All connections must be made in accordance with the Standard Drawings and Specifications and shall be inspected by City before the trench is filled.

. . .

~~8-1-32: ACCIDENTAL DISCHARGES/SLUG CONTROL PLANS:~~

~~(A) The Director may require any User to develop and implement an accidental discharge/slug control plan ("ASPP"). Where deemed necessary by City, facilities to prevent accidental discharge or slug discharges of pollutants shall be provided and maintained at the User's cost and expense. An accidental spill prevention plan/slug control plan showing facilities and operating procedures to provide this protection shall be submitted to City for review and approval before implementation. City shall determine which User is required to develop a plan and require said plan to be submitted within thirty (30) days after written notification by City that an ASPP is required. Each User shall implement its ASPP as submitted or as modified after such plan has been reviewed and approved by City. Review and approval of such plans and operating procedures by City shall not relieve the User from the responsibility to modify its facility as necessary to meet the requirements of this Chapter.~~

~~(B) Any User required to develop and implement an ASPP shall submit a plan which addresses, at a minimum, the following:~~

~~(1) Description of discharge practices, including non-routine batch discharges;~~

~~(2) Description of stored chemicals;~~

~~(3) Procedures for immediately notifying the POTW of any accidental or slug discharge. Such notification must also be given for any discharge which would violate any of the standards in Sections 8-1-9 through 8-1-12 of this Chapter; and~~

~~(4) Procedures to prevent adverse impact from any accidental or slug discharge. Such procedures include, but are not limited to, inspection and maintenance of storage areas, handling and transfer of materials, loading and unloading operations, control of plant site runoff, worker training, building of containment structures or equipment, measures for containing toxic organic pollutants (including solvents) and/or measures and equipment for emergency response.~~

~~(C) Users shall notify the Director immediately upon the occurrence of a "slug" or "accidental discharge" of substances regulated by this Chapter. The notification shall include location of discharge, date and time thereof, type of waste, concentration and volume, and corrective actions. Any affected User shall be liable for any expense, loss, or damage to the POTW, including the amount of any fines imposed on the City on account thereof under State or Federal law.~~

~~(D) Within five (5) days following an accidental discharge, the User shall submit to the Director a detailed written report describing the cause of the discharge and the measures to be taken by the User to prevent similar future occurrences. Such notification shall not relieve the User of any expense, loss, damage or other liability which may be incurred as a result of damage to the POTW, fish kills, or any other damage to person or property; nor shall such notification relieve the User of any fines, civil penalties or other liability which may be imposed by this Chapter or other applicable law.~~

~~(E) Signs shall be permanently posted in conspicuous places on the User's premises advising employees whom to call in the event of a slug or accidental discharge. Employers shall instruct all employees who may cause or discover such a discharge with respect to emergency notification procedures. (Ord. 2223, 1-9-97; Ord. 3094, 9-22-16)~~

8-1-32~~3~~: WASTEWATER DISCHARGE PERMIT REQUIREMENTS: No significant industrial User shall discharge wastewater into the POTW without first obtaining a wastewater discharge permit from the Director. Any violation of the terms and conditions of a wastewater discharge permit shall be deemed a violation of this Chapter and subjects the wastewater discharge permittee to the sanctions set forth in this Chapter. Obtaining a wastewater discharge permit does not relieve a permittee of its obligation to comply with all federal and state

pretreatment standards or requirements or with any other requirements of Federal, State, and local law. The Director may require other Users, including liquid waste haulers, to obtain wastewater discharge permits (as necessary) to carry out the purposes of this Chapter.

8-1-33~~4~~: WASTEWATER DISCHARGE PERMITS—EXISTING SIU'S: Any SIU that was discharging wastewater into the POTW prior to the Effective Date and that wishes to continue such discharges in the future shall submit, within sixty (60) days after notification by the Director a permit application to City in accordance with Section 8-1-36~~7~~ of this Chapter. The City's notification to SIU's covered by categorical pretreatment standards will be in ample time to ensure that the SIU's comply with the one hundred eighty (180) day submittal deadline date established in 40 CFR § 403.12(b).

8-1-34~~5~~: WASTEWATER DISCHARGE PERMITS—NEW SOURCES AND NEW USERS: At least ninety (90) days prior to the anticipated start-up, any New Source, which is a source that becomes a User subsequent to the proposal of an applicable categorical pretreatment standard that is later promulgated, and any New User considered by City to fit the definition of a SIU, shall apply for a wastewater discharge permit and will be required to submit to City at least the information listed in paragraphs (A) through (E) of Section 8-1-36~~7~~ of this Chapter. A New Source or New User cannot discharge without first receiving a wastewater discharge permit from City. New Sources and New Users shall be required to include in their application information on the method of pretreatment the User intends to use to meet applicable pretreatment standards. New Sources and New Users shall give estimates of the information requested in paragraphs (D) and (E) of Section 8-1-36~~7~~.

8-1-35~~6~~: WASTEWATER DISCHARGE PERMITS; EXTRA-JURISDICTIONAL USERS: Any Existing User who is located beyond City limits and who is required to obtain a wastewater discharge permit shall submit a wastewater discharge permit application as outlined in Section 8-1-36~~7~~. New Source and New Users located beyond City limits are also required to obtain a wastewater discharge permit in accordance with Section 8-1-36~~7~~ of this Chapter.

8-1-36~~7~~: WASTEWATER DISCHARGE PERMIT APPLICATION CONTENTS: All Users required to obtain a wastewater discharge permit must submit, at a minimum, the following information. The Director shall approve a form to be used as a permit application. Categorical Users submitting the following information shall be deemed to have complied with 40 CFR 403.12(b).

(A) Identifying Information. The User shall submit the name and address of the facility, including the names of the operator and owners;

. . .

(E) Measurements of Pollutants.

(1) Categorical User:

(a) The User shall identify the applicable pretreatment standards for each regulated or manufacturing process.

(b) In addition, the User shall submit the results of sampling and analysis identifying the nature and concentration (or mass where required by the Categorical Pretreatment Standard or as required by City) of regulated pollutants (including standards contained in Sections 8-1-9 through 8-1-12 of this Chapter, as appropriate) in the discharge from each regulated or manufacturing process. Both daily maximum and average concentration (or mass, where required) shall be reported. The sample shall be representative of daily operations and shall conform to sampling and analytical procedures outlined in Sections 8-1-~~58~~ 56 through 8-1-~~60~~ 58 of this Chapter.

(c) The User shall take a minimum of five (5) representative samples to compile the data necessary to comply with the requirements of this paragraph.

(d) Where an alternate concentration or mass limit has been calculated in accordance with 40 CRF 403.6(e) for a categorical User covered by a categorical pretreatment standard, this adjusted limit along with supporting data shall be submitted as part of the application.

(2) Non-Categorical User.

(a) The User shall identify the applicable pretreatment standards for its wastewater discharge.

(b) In addition, the User shall submit the results of sampling and analysis identifying the nature and concentration (or mass where required by City) of regulated pollutants contained in Sections 8-1-9 through 8-1-12 of this Chapter, as appropriate in the discharge. Both daily maximum and average concentration (or mass, where required) shall be reported. The sample shall be representative of daily operations and shall conform to sampling and analytical procedures outlined in Sections 8-1-56~~8~~ through 8-1-~~60~~ 58 of this Chapter.

(c) The User shall take a minimum of five (5) representative samples to compile that data necessary to comply with the requirements of this Subsection.

(d) Where the Director has developed alternate concentration or mass limits because of dilution, this adjusted limit along with supporting data shall be submitted as part of the application.

~~(A)~~ (F) Certification. A statement, reviewed by an authorized representative of the User and certified by a qualified professional as outlined in Section 8-1-37~~8~~, indicating whether the applicable pretreatment standards are being met on a consistent basis, and, if not, whether additional operation and maintenance (hereafter referred to as "O and M") or

additional pretreatment is required for the User to meet the applicable pretreatment standards and requirements.

(G) Compliance Schedule. If additional pretreatment or O and M will be required to meet the applicable Pretreatment Standards, the User shall submit the shortest schedule by which the User will provide such additional pretreatment and/or O and M. The User's schedule shall conform with the requirements of Section 8-1-~~49~~ 48 of this Chapter. The completion date in this schedule shall not be later than the compliance date established pursuant to Section 8-1-18 of this Chapter.

(1) Where the User's Categorical Pretreatment Standard has been modified by removal allowance (40 CFR 403.7), the combined wastestream formula (40 CFR 403.6(e)), or a Fundamentally Different Factors variance (40 CFR 403.13) at the time the User submits the report required by this paragraph, the information required by paragraphs (F) and (G) of this Section shall pertain to the modified limits.

(2) If the Categorical Pretreatment Standard is modified by a removal allowance (40 CFR 403.7), the combined wastestream formula (40 CFR 403.6(e), and/or a Fundamentally Different Factors variance (40 CFR 403.13) after the User submits the report required by paragraphs (F) and (G) of this Section, then a report containing modified information shall be submitted by the User within sixty (60) days after the new limit is approved.

(H) The User shall submit any other information as may be deemed necessary by the Director to evaluate the wastewater discharge permit application.

(I) Baseline Reporting Requirements

Reporting requirements for industrial users upon effective date of Categorical Pretreatment Standard—baseline report. Within one hundred eighty (180) days after the effective date of a Categorical Pretreatment Standard or one hundred eighty (180) days after the final administrative decision made upon a category determination submission under §403.6(a)(4) of the Act, whichever is later. Existing Industrial Users subject to such Categorical Pretreatment Standards and currently discharging to or scheduled to discharge to a Publicly Owned Treatment Works (POTW) shall be required to submit to the Control Authority a report which contains the information listed in paragraphs (A)-(H) of this Section. At least ninety (90) days prior to commencement of discharge, New Sources, and sources that become Industrial Users subsequent to the promulgation of an applicable Categorical Pretreatment Standard, shall be required to submit to the Control Authority a report which contains the information listed in paragraphs (A)-(E) of this Section. New Sources shall also be required to include in this report information on the method of pretreatment the Source intends to use to meet applicable pretreatment standards. New Sources shall give estimates of the information requested in paragraphs (D)(1) and (E)(1) of this Section:

Incomplete or inaccurate applications will not be processed and will be returned to the User for revision.

8-1-37~~8~~: SIGNATORY AND CERTIFICATION REQUIRED: All wastewater discharge permit applications and User reports must be signed by a duly authorized representative of the User. The duly authorized employee must be an individual holding a position of responsibility for the overall operation of the facility or the User's Pretreatment Program. This authorization must be made in a writing signed by the principal executive officer or ranking elected official for the User and submitted to the Director prior to or together with the applications and reports being submitted by the User. The application shall contain the following certification statement:

> "I certify under penalty of law that this document and all attachments were prepared under my direction or supervision in accordance with a system designed to assure that qualified personnel properly gather and evaluate the information submitted. Based on my inquiry of the person or persons who manage the system, or those persons directly responsible for gathering the information, the information submitted is, to the best of my knowledge and belief, true, accurate, and complete. I am aware that there are significant penalties for submitting false information, including the possibility of fine and imprisonment for knowing violations."

8-1-38~~9~~ WASTEWATER DISCHARGE PERMIT DECISIONS: The Director will evaluate the data furnished by the User and may require additional information. Within thirty (30) days of receipt of a complete wastewater discharge permit application, the Director will determine whether or not to issue a wastewater discharge permit. Upon a determination to issue, the permit shall be issued within thirty (30) days of full evaluation and acceptance of the data furnished. The Director may deny any application for a wastewater discharge permit if the application fails to conform to this Chapter in any respect.

8-1-~~40~~39: WASTEWATER DISCHARGE PERMIT CONTENTS:

(A) Wastewater discharge permits shall include such conditions as are reasonably deemed necessary by the Director to prevent pass-through or interference, protect the quality of the body of water receiving the treatment plant's effluent, protect worker health and safety, facilitate sludge management and disposal, and protect against damage to the POTW.

. . .

8-1-40~~1~~: WASTEWATER DISCHARGE PERMIT APPEALS:

(A) Any person, including the User, may petition City to reconsider the terms of a wastewater discharge permit within twenty-eight (28) days of its issuance.

(B) Failure to submit a timely petition for review shall be deemed to be a waiver of the administrative appeal.

(C) In its petition, the appealing party must indicate the wastewater discharge permit provisions objected to, the reasons for this objection, and the alternative condition, if any, it seeks to place in the wastewater discharge permit.

(D) The effectiveness of the wastewater discharge permit shall not be stayed pending the appeal.

(E) If City fails to act within twenty-eight (28) days, a request for reconsideration shall be deemed to be denied. Decisions not to reconsider a wastewater discharge permit, not to issue a wastewater discharge permit, or not to modify a wastewater discharge permit, shall be considered final administrative actions for purposes of judicial review.

(F) Aggrieved parties seeking judicial review of the final administrative wastewater discharge permit decision must do so by filing a petition for judicial review with the District Court of the Seventh Judicial District, Bonneville County, Idaho, within twenty-eight (28) days after the date such decision was signed and mailed or physically delivered to the User. Judicial review of such petitions shall be conducted in accordance with Rule 84 of the Idaho Rules of Civil Procedure and the Idaho Administrative Procedure Act to the extent such procedures do not expressly conflict with the provisions of this Chapter.

8-1-41~~2~~: WASTEWATER DISCHARGE PERMIT DURATION: Wastewater discharge permits shall be issued for a specified time period, not to exceed five (5) years. Each wastewater discharge permit will indicate a specific date upon which it will expire.

8-1-42~~3~~: WASTEWATER DISCHARGE PERMIT MODIFICATION: The Director may modify the wastewater discharge permit for good cause including, but not limited to, the following:

(A) To incorporate any new or revised Federal, State, or local pretreatment standards or requirements;

(B) To address significant alterations or additions to the User's operation, processes or wastewater volume or character since the time of wastewater discharge permit issuance;

(C) A change in the POTW that requires either a temporary or permanent reduction or elimination of the authorized discharge;

(D) Information indicating that the permitted discharge poses a threat to the POTW, City personnel, or the receiving waters;

(E) Violation of any terms or conditions of the wastewater discharge permit;

(F) Misrepresentation or failure to fully disclose all relevant facts in the wastewater discharge permit application or in any required report;

(G) Revision of or a grant of variance from categorical pretreatment standards pursuant to 40 CFR 403.13;

(H) To correct typographical or other errors in the wastewater discharge permit; or

(I) To reflect a transfer of the facility ownership or operation to a new owner or operator, provided however modification for this purpose may not be allowed unless the wastewater discharge permit is transferable as provided in Section 8-1-43~~4~~ of this Chapter.

8-1-43~~4~~: WASTEWATER DISCHARGE PERMIT TRANSFER: Wastewater discharge permits may be reassigned or transferred to a new owner or operator only if the permittee gives at least thirty (30) days advance notice to the Director and the Director approves the wastewater discharge permit transfer. The notice to the Director must include a written certification by the new owner or operator which:

(A) States that the new owner or operator has no immediate intent to change the facility's operations and processes;

(B) Identifies the specific date on which the transfer is to occur; and

(C) Assumes full responsibility for complying with the existing wastewater discharge permit beginning on the date the transfer is to occur.

(D) Failure to provide advance notice of a transfer renders the wastewater discharge permit voidable as of the date of facility transfer.

8-1-44~~5~~: WASTEWATER DISCHARGE PERMIT REVOCATION: Wastewater discharge permits may be revoked for, but not limited to, the following reasons:

(A) Failure to notify the Director of significant changes to the wastewater prior to the changed discharge;

(B) Failure to provide prior notification to the Director of changed conditions;

(C) Misrepresentation or failure to fully disclose all relevant facts in the wastewater discharge permit application;

(D) Falsifying self-monitoring reports;

(E) Tampering with monitoring equipment;

(F) Refusing to allow the Director or their nominee timely access to the facility premises and records, provided proper identification is displayed at the time access is requested;

(G) Failure to meet discharge limitations;

(H) Failure to pay fines;

(I) Failure to pay sewer charges;

(J) Failure to meet compliance schedules;

(K) Failure to complete a wastewater survey or the wastewater discharge permit application;

(L) Failure to provide advance notice of the transfer of a permitted facility; or

(M) If the City has to invoke its emergency provision as cited in Section 8-1-70~~2~~ of this Chapter.

(N) Violation of any pretreatment standard or requirement, or any terms of the wastewater discharge permit or this Chapter. Wastewater discharge permits shall be voidable upon cessation of operations or transfer of business ownership. All wastewater discharge permits issued to a particular User are void upon the issuance of a new wastewater discharge permit to that User.

8-1-45~~6~~: WASTEWATER DISCHARGE PERMIT REISSUANCE: A User who is required to have a wastewater discharge permit shall apply for the reissuance of a wastewater discharge permit by submitting a complete wastewater discharge permit application, in accordance with Section 8-1-36~~7~~ of this Chapter, a minimum of sixty (60) days prior to the expiration of the User's existing wastewater discharge permit ~~(cannot Exceed Five (5) Years)~~. A User whose existing wastewater discharge permit has expired -and who has submitted its re-application in the time period specified herein shall be deemed to have an effective wastewater discharge permit until City issues or denies the new wastewater discharge permit, however in no case can the permit be extended beyond five (5) years. ~~.~~ A User whose existing wastewater discharge permit has expired -and who failed to submit~~s~~ its re-application in the time period specified herein will be deemed to be discharging without a wastewater discharge permit.

8-1-46~~7~~: FINAL COMPLIANCE REPORTS:

(A) Within ninety (90) days following the date for final compliance of an existing Significant Industrial User with applicable pretreatment standards and requirements set forth in this Chapter, in Federal Categorical Standards, or in a wastewater discharge permit, or in the case of a New Source or a New User considered by City to fit the definition of an SIU, within ninety (90) days following commencement of the introduction of wastewater into the POTW, the affected User shall submit to the Director a report containing the information outlined in paragraphs (D) through (F) of Section 8-1-36~~7~~ of this Chapter.

(B) For Users subject to equivalent mass or concentration limits established by City in accordance with procedures established in 40 CFR 403.6 (c), this report shall contain a reasonable measure of the User's long-term production rate. For all other Users subject to

Categorical Pretreatment Standards expressed in terms of allowable pollutant discharge per unit of production (or other measure of operation), this report shall include the User's actual production during the appropriate sampling period.

8-1-47~~8~~: PERIODIC COMPLIANCE REPORT:

(A) Any User that is required to have an industrial waste discharge permit and performs self-monitoring shall submit to City during the months of June and December, unless required on other dates or more frequently by City, a report indicating the nature of the effluent over the previous reporting period. The frequency of monitoring shall be as prescribed within the industrial waste discharge permit. At a minimum, Users shall sample their discharge at least twice per year.

(B) The report shall include a record of the concentrations (and mass if specified in the wastewater discharge permit) of the pollutants listed in the wastewater discharge permit that were measured and a record of all flow measurements (average and maximum) taken at the designated sampling locations, and shall also include any additional information required by this Chapter or the wastewater discharge permit. Production data shall be reported if required by the wastewater discharge permit. Both daily maximum and average concentration (or mass, where required) shall be reported. If a User sampled and analyzed more frequently than what was required by City or by this Chapter using methodologies in 40 CFR Part 136, it must submit all results of sampling and analysis of the discharge during the reporting period.

(C) Any User subject to equivalent mass or concentration limits established by City or by unit production limits specified in the applicable C~~c~~ategorical S~~s~~tandards, shall report production data as outlined in Section 8-1-46~~7~~(B) of this Chapter.

(D) If City calculated limits to factor out dilution flows or non-regulated flows, the User will be responsible for providing flows from the regulated process flows, dilution flows, and non-regulated flows.

(E) Flows shall be reported on the basis of actual measurement, provided, however, City may accept reports of average and maximum flows estimated by verifiable techniques if City determines that an actual measurement is not feasible.

(F) Flows shall be reported on the basis of actual measurement, provided, however, the City may accept reports of average and maximum flows estimated by verifiable techniques if the City determines that an actual measurement is not feasible.

(G) Discharges sampled shall be representative of the User's daily operations and shall be taken in accordance with the requirements specified in Sections 8-1-56~~8~~ through 8-1-58~~60~~ of this Chapter.

(H) City may require reporting by Users that are not required to have an industrial wastewater discharge permit if information or data is needed to establish a sewer charge, determine the

treatability of the effluent or determine any other factor which is related to the operation and maintenance of the sewer system.

(I) City may require self-monitoring by the User or, if requested by the User, may agree to perform the periodic compliance monitoring needed to prepare the periodic compliance report required under this Section. Self-monitoring shall be subject to the approval of the City. If City agrees to perform such periodic compliance monitoring, it may charge the User for such monitoring, based upon the costs incurred by City for the sampling and analyses. Any such charges shall be added to the normal sewer charge and shall be payable as part of the User's sewer billing statement. City shall be under no obligation to perform periodic compliance monitoring for a User.

8-1-48~~9~~ COMPLIANCE SCHEDULES FOR APPLICABLE PRETREATMENT STANDARDS:

(A) The schedule shall contain increments of progress in the form of dates for the commencement and completion of major events leading to the construction and operation of additional pretreatment required for the User to meet the applicable pretreatment standards (e.g., hiring an engineer, completing preliminary plans, completing final plans, executing contract for major components, commencing construction, completing construction, etc.).

(B) No increment referred to in paragraph (A) of this Section shall exceed nine (9) months.

(C) Not later than fourteen (14) days following each date in the schedule and the final date for compliance, the User shall submit a progress report to City including, at a minimum, whether or not it complied with the increment of progress to be met on such date and, if not, the date on which it expects to comply with this increment of progress, the reason for delay, and the steps being taken by the User to return the construction to the schedule established. In no event shall more than nine (9) months elapse between such progress reports.

8-1-~~50~~49: NOTIFICATION OF ~~SIGNIFICANT~~ MATERIAL PRODUCTION CHANGES: Any User operating under a wastewater discharge permit incorporating equivalent mass or concentration limits shall notify City within two (2) business days after the User has a reasonable basis to know that its production level will ~~significantly~~ materially change within the next calendar month. Material changes that require this notice will be identified on individual permits issued. Any User not providing a notice of such anticipated change will be required to comply with the existing limits contained in its wastewater discharge permit.

8-1-50~~1~~: HAZARDOUS WASTE NOTIFICATION:

(A) Any User that is discharging more than fifteen (15) kilograms of hazardous wastes as defined in 40 CFR 261 (listed or characteristic wastes) in a calendar month or any facility discharging any amount of acutely hazardous wastes as specified in 40 CFR 261.30(d) and 261.33(e) is required to provide a one-time notification in writing to City, the EPA Region

10, Office of Air, Waste and Toxic Chemicals and, to the extent required by law and, the Idaho Department of Health and Welfare Division. Any existing User exempt from this notification, shall comply with the requirements contained herein within thirty (30) days of becoming aware of a discharge of fifteen (15) kilograms or greater of hazardous wastes in a calendar month or the discharge of acutely hazardous wastes to the City sewer system. Such notification shall include:

. . .

8-1-51~~2~~: NOTICE OF POTENTIAL PROBLEMS, INCLUDING ACCIDENTAL SPILLS, SLUG LOADINGS: Any User shall notify City immediately of all discharges that could cause problems to the POTW, including any slug loads, as defined in this Chapter. The notification shall also include the concentration and volume of the discharge, corrective action being taken or proposed to be taken, and steps being taken to reduce any adverse impact on the POTW. Any User who discharges a slug load of pollutants shall be liable for any expense, loss, or damage to the POTW, in addition to the amount of any fines imposed on City under State or Federal law.

8-1-52~~3~~: NON-COMPLIANCE REPORTING: If sampling performed by a User indicates a violation, the User shall notify City within twenty-four (24) hours of becoming aware of the violation. The User shall also repeat the sampling within five (5) days and submit the results of the repeat analysis to City within thirty (30) days after becoming aware of the violation. Where City has performed the sampling and analysis in lieu of the Industrial User, City must perform the repeat sampling and analysis unless it notifies the User of the violation and requires the User to perform the repeat analysis. Resampling is not required if:

(A) City performs sampling at the Industrial User's location at a frequency of at least once per month; or

(B) City performs sampling at the Industrial User's location between the time when the initial sampling was conducted and the time when the User receives the results of this sampling.

8-1-53~~4~~: NOTIFICATION OF CHANGED DISCHARGE: All Users shall promptly notify City in advance of any substantial change in the volume or character of pollutants in their discharge, including significant manufacturing process changes, pretreatment modifications, and the listed or characteristic hazardous wastes for which the User has submitted initial notification under 40 CFR 403.12 (p).

~~8-1-55 (RESERVED):~~

8-1-~~56~~54: REPORTS FROM UNPERMITTED USERS: All Users not required to obtain a wastewater discharge permit shall provide appropriate reports to City as the Director may require

8-1-55~~7~~: RECORDKEEPING : Users subject to the reporting requirements of this Chapter shall retain, and make available for inspection and copying, all records of information obtained pursuant to any monitoring activities required by this Chapter and any additional records of information obtained pursuant to monitoring activities undertaken by the User independent of such requirements, including documentation associated with Best Management Practices. Records shall include the date, exact place, method, and time of sampling and the name of the person(s) taking the samples; the dates analyses were performed; who performed the analyses; the analytical techniques or methods used; and the results of such analyses. These records shall be kept and made available to the City for a period of at least ~~Three~~ five (~~3~~5) years after their creation. This period shall be automatically extended for the duration of any litigation concerning the User or POTW, or where the User has been specifically notified of a longer retention period by the Director.

8-1-56~~8~~: SAMPLING REQUIREMENTS FOR USERS:

(A) Grab samples must be used for pH, cyanide, total phenols, oil and grease, sulfide, and volatile organic compounds. For all other pollutants, twenty-four (24) hour composite samples must be obtained through flow-proportional composite sampling techniques, unless time-proportional composite sampling or grab sampling is authorized by the Director. The samples must be representative of the Discharge and the decision to allow the alternative sampling must be documented in the Industrial User file for that facility or facilities. Using protocols (including appropriate preservation) specified in 40 CFR Part 136 and appropriate EPA guidance, multiple grab samples collected during the twenty-four (24) hour period may be composited prior to the analysis as follows: for cyanide, total phenols, and sulfides the samples may be composited in the laboratory. Composite samples for other parameters unaffected by compositing procedures as documented in approved EPA methodologies may be authorized by the Control Authority, as appropriate.

. . .

8-1-57~~9~~: ANALYTICAL REQUIREMENTS: All pollutant analyses, including sampling techniques, shall be performed in accordance with the techniques prescribed in 40 CFR Part 136, unless otherwise specified in an applicable categorical pretreatment standard. If 40 CFR Part 136 does not contain sampling or analytical techniques for the pollutant in question, sampling and analyses must be performed in accordance with procedures approved by the EPA

8-1-~~60~~58: MONITORING OF USER'S WASTEWATER: City will follow the same procedures as outlined in Sections 8-1-56~~8~~ and 8-1-57~~9~~ of this Chapter whenever it deems City monitoring is appropriate to ensure compliance with this Chapter.

8-1-~~61~~59: INSPECTION AND SAMPLING: City shall have the right to enter the facilities of any User to ascertain whether the purposes of this Chapter, and any wastewater discharge permit or order issued hereunder, are being met and whether the User is complying with all requirements thereof. Users shall allow the Director ready access to all parts of the premises

for the purposes of inspection, sampling, records examination and copying, and the performance of any additional duties.

. . .

8-1-60~~2~~: MONITORING FACILITIES:

(A) Each User shall provide and operate at its own expense a monitoring facility to allow inspection, sampling, and flow measurements of each sewer discharge to City. Each monitoring facility shall be situated on the User's premises, except where such a location would be impractical or cause undue hardship on the User and City approves such alternate location in writing.

. . .

8-1-~~63~~61: SEARCH WARRANTS: If the Director has been refused access to a building, structure or property, or any part thereof, and is able to demonstrate probable cause to believe that there may be a violation of this Chapter, or that there is a need to inspect as part of a routine inspection program of the City designed to verify compliance with this Chapter or any wastewater discharge permit or order issued hereunder, or to protect the overall public health, safety and welfare of the community, then the Director may seek issuance of a search or seizure warrant from a court of competent jurisdiction. Such warrant shall be served in the manner allowed by law.

8-1-~~64~~62: CONFIDENTIAL INFORMATION: Information and data on a User obtained from reports, surveys, wastewater discharge permit applications, wastewater discharge permits, and monitoring programs, and from City inspection and sampling activities, shall be available to the public without restriction, unless the User specifically requests, and is able to demonstrate to the satisfaction of City, that the release of such information would divulge information, processes, or methods of production entitled to protection as trade secrets under applicable State law. When requested and demonstrated by the User furnishing a report that such information should be held confidential, the portions of a report which might disclose trade secrets or secret processes shall not be made available for inspection by the public, but shall be made available immediately upon request to governmental agencies for uses related to the NPDES program or pretreatment program, and in enforcement proceedings involving the person furnishing the report. Wastewater constituents and characteristics and other “effluent data” as defined by 40 CFR 2.302 will not be recognized as confidential information and will be available to the public without restriction.

8-1-~~65~~63: PUBLICATION OF USERS IN SIGNIFICANT NON-COMPLIANCE: City shall publish annually, in the Official Newspaper, a list of the Users which, during the previous twelve (12) months, were in significant non-compliance with applicable pretreatment standards and requirements. For the purposes of this Chapter, a Significant Industrial User (or any Industrial User which violates Subsections (C), (D), or (H) of this Section) is in significant noncompliance if its violation meets one (1) or more of the following criteria;

(A) Chronic violations of wastewater discharge limits, defined here as those in which sixty-six percent (66%) or more of wastewater measurements taken for the same pollutant parameter during a six (6) month period exceed (by any magnitude) a numeric Pretreatment Standard or Requirement, including instantaneous limits, as defined by 40 CFR 403.3(l);

(B) Technical Review Criteria ("TRC") violations, defined here as those in which thirty-three percent (33%) or more of all of the measurements taken for each pollutant parameter during a six (6) month period equal or exceed the product of the numeric Pretreatment Standard or Requirement, including instantaneous limits, as defined by 40 CFR 403.3(l) multiplied by the applicable TRC (TRC = 1.4 for BOD, TSS, fats, oil, and grease, and 1.2 for all other pollutants except pH);

(C) Any other violations of a Pretreatment Standard or Requirement as defined by 40 CFR 403.3(l) (daily maximum, longer-term average, instantaneous limit, or narrative Standard) that the POTW determines has caused, alone or in combination with other discharges, interference or pass through, including endangering the health of POTW personnel or the general public;

(D) Any discharge of pollutant that has caused imminent endangerment to human health, welfare or to the environment, or has resulted in POTW's exercise of its emergency authority under Section 8-1-70~~2~~ of this Chapter to halt or prevent such a discharge;

. . .

8-1-~~66~~64: NOTIFICATION OF VIOLATION: When the Director finds that a User has violated or continues to violate any provision of this Chapter, a wastewater discharge permit or order issued hereunder, or any other pretreatment standard or requirement, the Director may serve upon that User a written Notice of Violation. Such Notice shall be conclusively deemed served upon its deposit in the United States mail, postage prepaid, certified mail, return receipt requested, addressed to the address specified in the User's application, or such other address which has been delivered to City in writing. Within thirty (30) days after service of this notice, User shall similarly serve upon the Director an explanation of the violation and a plan for the satisfactory correction and prevention thereof, to include specific required actions. Submission of this plan in no way relieves the User of liability for any violation occurring before or after receipt of the Notice of Violation. Nothing in this Section shall limit the authority of City to take any action, including emergency actions or any other enforcement action, without first issuing a Notice of Violation.

8-1-65~~7~~: CONSENT ORDERS: The Director may enter into consent orders, assurances of voluntary compliance, or other similar documents establishing an agreement with any User responsible for non-compliance. Such documents will include specific action to be taken by the User to correct the non-compliance within a time period specified by the document. Such documents shall have the same force and effect as the administrative orders issued pursuant to

Sections 8-1-67~~9~~ and 8-1-68~~70~~ of this Chapter and shall be judicially enforceable. Use of a Consent Order shall not be a bar against, or prerequisite for, taking any other action against the User.

8-1-66~~8~~: SHOW CAUSE HEARING: The Director may order a User which has violated or continues to violate, any provision of this Chapter, a wastewater discharge permit or order issued hereunder, or any other pretreatment standard or requirement, to appear before the Director and show cause why the proposed enforcement action should not be taken. Notice shall be served on the User specifying the time and place for the meeting, the proposed enforcement action, the reasons for such action, and a request that the User show cause why the proposed enforcement action should not be taken. The notice of the meeting shall be served personally or by registered or certified mail, return receipt requested, at least fifteen (15) days prior to the hearing. Such notice may be served on any Authorized Representative of the User. A show cause hearing shall not be a bar against, or prerequisite for, taking any other action against the User.

8-1-67~~9~~: COMPLIANCE ORDERS: When the Director finds that a User has violated or continues to violate any provision of this Chapter, a wastewater discharge permit or order issued hereunder, or any other pretreatment standard or requirement, the Director may issue an order to the User responsible for the discharge directing that the User come into compliance within a time specified in the order. If the User does not come into compliance within the time specified in the order, sewer service may be discontinued unless adequate treatment facilities, devices, or other related appurtenances are installed and properly operated. Compliance orders may also contain other requirements to address the non-compliance, including additional self-monitoring and management practices designed to minimize the amount of pollutants discharged to the sewer. Issuance of a compliance order shall not be a bar against, or a prerequisite for, taking any other action against the User.

8-1-~~70~~68: CEASE AND DESIST ORDERS: When the Director finds that a User has violated, or continues to violate, any provision of this Chapter, a wastewater discharge permit or order issued hereunder, or any other pretreatment standard or requirement, or that the User's past violations are likely to recur, the Director may issue an order to the User directing it to cease and desist all such violations and directing the User to:

. . .

8-1-~~71~~69: ADMINISTRATIVE FINES; ATTORNEYS FEES AND COSTS:

(A~~C~~) When the Director finds that a User has violated or continues to violate any provision of this Chapter, a wastewater discharge permit or order issued hereunder, or any other pretreatment standard or requirement, the Director may fine such User in an amount set from time to time by Resolution of the Council. Such fines shall be assessed on a per violation, per day basis. In the case of monthly or other long term average discharge limits, fines shall be assessed for each day during the period of violation.

~~(D) Unpaid charges, fines and penalties shall, after thirty (30) calendar days, be assessed an additional penalty of five percent (5%) of the unpaid balance, and interest shall accrue thereafter at a rate of twelve percent (12%) per year.~~

(B~~E~~) Users desiring to dispute such fines must file a written request for the Director to reconsider the fine along with full payment of the fine amount within fifteen (15) days of being notified of the fine. Upon receipt of such request, the Director shall convene a hearing on the matter within fifteen (15) days thereafter. In the event the User's appeal is successful, the payment, together with any interest accruing thereto, shall be returned to the User. City may add the costs of preparing administrative enforcement actions, such as notices and orders, to the fine.

(C~~F~~) Issuance of an administrative fine shall not be a bar against, or a prerequisite for, taking any other action against the User.

(D~~G~~) To the fullest extent permitted by law, City shall be entitled to recover its reasonable attorney fees, court costs, and other expenses associated with enforcement of this Chapter, including without limitation, sampling and monitoring expenses and all other damages sustained by City as a direct result of a User's violation of the provisions of this Chapter.

8-1-~~72~~70: EMERGENCY SUSPENSIONS: The Director may immediately suspend a User's discharge, after informal notice to the User, whenever such suspension is necessary to stop an actual or threatened discharge which reasonably appears to present or which causes an imminent or substantial endangerment to the health or welfare of persons. The Director may also immediately suspend a User's discharge, after notice and opportunity to respond, that threatens to interfere with the operation of the POTW, or which presents or may present an endangerment to the environment.

(A) Any User notified of a suspension of its discharge shall immediately stop or eliminate its discharge into the POTW. In the event of a User's failure to immediately comply voluntarily with the suspension order, the Director shall take steps as deemed necessary, including immediate severance of the sewer connection, to prevent or minimize damage to the POTW, its receiving stream, or endangerment to any individuals. The Director shall allow the User to recommence its discharge when the User has demonstrated to the satisfaction of City that the period of endangerment has passed, unless termination proceedings under Section 8-1-71~~3~~ of this Chapter are initiated against the User.

(B) A User that is responsible, in whole or in part, for any discharge presenting imminent endangerment shall submit to the Director a detailed written statement, describing the causes of the harmful contribution and the measures taken to prevent any future occurrence, prior to the date of any show cause or termination hearing under Sections 8-1-66~~8~~ and 8-1-71~~3~~ of this Chapter.

Nothing in the Section shall be interpreted as requiring a hearing prior to an emergency suspension under this Section.

8-1-71~~3~~: TERMINATION OF DISCHARGE (NON-EMERGENCY): In addition to the provisions in Section 8-1-44~~5~~ of this Chapter, any User that violates any of the following conditions is subject to discharge termination:

(A) Violation of wastewater discharge permit conditions;

(B) Failure to accurately report the wastewater constituents and characteristics of its discharge;

(C) Failure to report significant changes in operations or wastewater volume, constituents and characteristics prior to discharge;

(D) Refusal of reasonable access to the User's premises for the purpose of inspection, monitoring or sampling; or

(E) Violation of the pretreatment standards in Sections 8-1-9 through 8-1-20 this Chapter.

Such User will be notified of the proposed termination of its discharge and be offered an opportunity to show cause under Section 8-1-66~~8~~ of this Chapter why the proposed action should not be taken. Exercise of this option by City shall not be a bar to, or a prerequisite for, taking any other action against the User.

~~8-1-74: INJUNCTIVE RELIEF: When the Director finds that a User has violated, or continues to violate, any provision of this Chapter, a wastewater discharge permit or order issued hereunder, or any other pretreatment standard or requirement, City may petition the Seventh Judicial District of the State of Idaho, Bonneville County, through the City Attorney, for the issuance of a temporary or permanent injunction, as appropriate, which restrains or compels the specific performance of the wastewater discharge permit, order, or other requirement imposed by this Chapter on activities of the User. City may also seek such other action as is appropriate for legal or equitable relief, including a requirement for the User to conduct environmental remediation. A petition for injunctive relief shall not be a bar against, or a prerequisite for, taking any other action against a User.~~

~~8-1-75: CIVIL PENALTIES:~~

~~(A) A User which has violated or continues to violate any provision of this Chapter, a wastewater discharge permit, or order issued hereunder, or any other pretreatment standard or requirement shall be liable to City for a maximum civil penalty in an amount set from time to time by Resolution of the Council. In the case of a monthly or other long-term average discharge limit, penalties shall accrue for each day during the period of the violation.~~

~~(B) B) To the fullest extent permitted by State law, the Director may recover reasonable attorney fees, court costs, and other expenses associated with enforcement activities, including sampling and monitoring expenses and the cost of any actual damages incurred by the City.~~

~~(C) In determining the amount of civil liability, the Court shall take into account all relevant circumstances, including, but not limited to, the extent of harm caused by the violation, the magnitude and duration, any economic benefit gained through the User's violation, corrective actions by the User, the compliance history of the User, and any other factor as justice requires.~~

~~(D) Filing a suit for civil penalties shall not be a bar against, or a prerequisite for, taking any other action against a User.~~

~~8-1-76: CRIMINAL PROSECUTION:~~

~~(A) A User which has willfully or negligently violated any provision of this Chapter, a wastewater discharge permit, or order issued hereunder, or any other pretreatment standard or requirement shall, upon conviction, be guilty of a misdemeanor.~~

~~(B) A User which has willfully or negligently introduced any substance into the POTW which causes personal injury or property damage shall, upon conviction, be guilty of a misdemeanor. This penalty shall be in addition to any other cause of action for personal injury or property damage available under State law.~~

~~(C) A User which knowingly made any false statements, representations, or certifications in any application, record, report, plan, or other documentation filed, or required to be maintained, pursuant to this Chapter, wastewater discharge permit, or order issued hereunder or who falsified, tampered with, or knowingly rendered inaccurate any monitoring device or method required under this Chapter shall, upon conviction, be guilty of a misdemeanor. (Ord. 2223, 1-9-97; Ord. 2684, 12-14-06; Ord. 2964, 8-14-14)~~

~~8-1-77: REMEDIES NON-EXCLUSIVE: The provisions in Sections 8-1-65 through 8-1-83 of this Chapter are not exclusive remedies. City reserves the right to take any, all, or any combination of these actions against a non-compliant User. Enforcement in response to pretreatment violations will generally be in accordance with City's enforcement response plan. However, City reserves the right to take other action against any User when the circumstances warrant. Further, City may take more than one enforcement action against any non-compliant User. These actions may be taken concurrently. (Ord. 2223, 1-9-97; Ord. 2684, 12-14-06; Ord. 3094, 9-22-16)~~

8-1-~~78~~72: PERFORMANCE BONDS: The Director may decline to issue or reissue a wastewater discharge permit to any User which has failed to comply with any provision of this Chapter, a previous wastewater discharge permit or order issued hereunder, or any other

pretreatment standard or requirement unless such User first files a satisfactory bond, payable to City, in a sum not to exceed a value determined by the Director to be necessary to achieve consistent compliance.

8-1-~~79~~73: LIABILITY INSURANCE: The Director may decline to issue or reissue a wastewater discharge permit to any User which has failed to comply with any provision of this Chapter, a previous wastewater discharge permit or order issued hereunder, of any other pretreatment standard or requirement, unless the User first submits proof that it has adequate general liability insurance or has provided other similar financial assurances sufficient to restore or repair damage to the POTW caused by its discharge.

8-1-~~80~~74: TERMINATION OF UTILITY SERVICES: Whenever a User has violated or continues to violate any provision of this Chapter, a wastewater discharge permit or order issued hereunder, or any other pretreatment standard or requirement, electric service, water service, or other public utility services to the User may be terminated in accordance with the procedures set forth in Section 8-5-17 of this Chapter~~Code~~. Service may be restored only upon proof that the User has corrected its violation of the provisions of this Chapter and has provided satisfactory assurances that such violation will not recur.

8-1-~~81~~75: PUBLIC NUISANCES: A violation of any provision of this Chapter, a wastewater discharge permit, or order issued hereunder, or any other pretreatment standard or requirement, is hereby declared a public nuisance and shall be corrected or abated as directed by the Director. Any person(s) creating a public nuisance shall be subject to the provisions of this Code or State law governing such nuisances, including reimbursing City for any costs incurred in removing, abating, or remedying said nuisance.

8-1-~~8~~76~~2~~: INFORMANT REWARDS: City may pay a reward in an amount set from time to time by Resolution of Council for information leading to the discovery of non-compliance by a User. In the event that the information provided results in an administrative fine or civil penalty levied against the User, City may, upon similar Resolution, authorize the disbursement of up to ten percent (10%) of the collected fine or penalty to the informant, provided however, a single reward payment may not exceed in an amount set from time to time by Resolution of the Council.

8-1-~~8~~77~~3~~: CONTRACTOR LISTING: Users which are not compliance with applicable pretreatment standards and requirements are not eligible to receive a contractual award for the sale of goods or services to City. Existing contracts for the executory sale of goods or services to City held by a User found to be in significant non-compliance with pretreatment standards or requirements may be terminated at the discretion of City.

8-1-~~84~~78: AFFIRMATIVE DEFENSES TO DISCHARGE VIOLATIONS: The following affirmative defenses may be established by a User against whom any enforcement action or remedy is sought.

. . .

8-1-~~87~~79~~5~~: SEWER USER SERVICE CHARGE: A monthly service charge for sewer service shall be charged to all Users. All charges to Users, shall be calculated in a manner that ensures each User will pay a fair share of the costs of operation, maintenance, and capital equipment replacement based upon proportional usage of the sewer system and POTW. The rates established shall generate sufficient revenue to defray the costs of operating and prudently managing the sewerage system, including but not limited to: (a) capital costs; (b) operation and maintenance costs; (c) replacement costs and reserves, and (d) debt service on bonded indebtedness.

City shall establish monthly rates for sewer service supplied by City in an amount set from time to time by Resolution of the Council for the following:

(A) Monthly Non-Metered Residential Wastewater Rates (Inside City):

. . .

8-1-~~88~~80~~6~~: COMPUTATION OF INDUSTRIAL WASTE SERVICE CHARGE: Industrial waste service charges shall be based upon flow, biochemical oxygen demand (BOD), suspended solids (SS) and other reasonable factors that affect the cost of providing treatment services.

8-1-~~88~~81~~7~~: TRANSITION RATES FOR INDUSTRIAL USERS: Transition rates for industrial Users may be established by annual resolution of the Council, based upon the cost-of-service rate methodology set forth in the 1998 Rate Study prepared by CH2M Hill. Such rates shall be designed to transition over a period of not to exceed four (4) years, beginning in the year 2000. Transition to cost-of-service rates may occur at a different pace for each industrial User, depending upon the hardship associated with necessary adjustments towards cost-of-service based rates.

~~8-1-88: (Repealed)~~

~~8-1-89: WOODRUFF AVENUE INTERCEPTOR: In addition to the unit charges established pursuant to Sections 8-1-85 through 8-1-87 of this Chapter, any future industry located such that industrial waste is discharged into the Woodruff Avenue Interceptor at a point north of the intersection of Ninth Street and St. Clair Road, will be required to repay their share of the EPA grant for the Woodruff Avenue Interceptor. The required pay back shall be in accordance with all Federal regulations, laws, and guidelines pertaining thereto. (Ord. 2358, 1-13-00; Ord. 3094, 9-22-16)~~

8-1-~~90~~82: GREASE INTERCEPTOR: Whenever a building is used as a food service establishment or commercial kitchen, the owner or occupant shall provide a grease interceptor or a grease trap through which all waste containing fats, oils, or grease shall be drained. Such interceptor or trap shall be designed and sized as outlined in Chapter 10 Section 1014 of the currently adopted edition of the Idaho State Plumbing Code, and shall only allow wastewater, which complies with this Chapter to be drained into the sanitary sewer system.

EXCEPTION: The requirements of Chapter 10 Section 1014 shall not apply when, in the judgment of the Director, or their nominee, the kitchen discharge does not contain or exceed the fats, oils, and grease limitations as outlined in the Local Limits, Section 8-1-12 of this Chapter.

8-1-~~91~~83: INTERCEPTORS REQUIRED TO REMOVE HARMFUL INGREDIENTS: Grease, oil and sand interceptors or other adequate removal facilities shall be installed on the premises necessary to remove grease in excessive amounts, high concentration of blood, fruit, vegetable or grain liquors, milk wastes, or any flammable wastes, sand and other harmful ingredients. All interceptors shall be of a type and capacity approved by the Director and shall be so located as to be readily and easily accessible for cleaning and inspection. All interceptors shall be properly and regularly maintained by the owner or occupant.

8-1-~~92~~84: SEPTIC TANK WASTES:

(A) No person or entity shall haul septic tank waste for commercial purposes or discharge septic tank waste from any portable tank or storage container into the POTW unless such person or entity has a permit issued by the Director. Such permit shall be issued for a period of one (1) year and may be issued only upon submission of an application to the Director in such form as may be determined appropriate by the Director. The license fee for such permit shall be in an amount set from time to time by Resolution of the Council. Such permit shall be specific to the permittee and may not be sold or transferred to any other person or entity. The applicant shall, as part of the application, submit a list of all vehicles to be used for the purpose of hauling, transporting or discharging septic tank waste into the POTW and the permittee shall not use any vehicle or storage container not contained or included within such list.

(B) Septic tank waste may be introduced into the POTW only at a designated receiving structure within the treatment plant area, and at such times as are established by the Director. Such wastes shall consist of domestic sewage only, must meet or exceed the local limits and shall not otherwise violate any provisions of this Chapter. In no event shall any permittee haul, transport or otherwise discharge into the POTW any hazardous waste as defined by RCRA.

~~(C) Septic tank waste haulers must deliver to the Director a waste tracking form for every load of septic tank waste discharged into the POTW.~~

~~(D)~~(C) Septic tank waste haulers must provide a waste-tracking form for every load. This form shall include, at a minimum, the name and address of the waste hauler, permit number, truck identification, sources of waste, and volume and characteristics of waste.

~~(E)~~(D) Fees for dumping hauled wastes will be established as part of the User fee system as authorized in Section 8-1-86~~100~~ of this Chapter.

~~8-1-93: (Repealed)~~

8-1-~~98~~5~~4~~: CLASSIFICATION OF USERS: For billing purposes, sewer users shall be classified and billed as follows:

(A) Residential

(B) Commercial

(C) Industrial

~~8-1-95: DOMESTIC AND COMMERCIAL RATES OUTSIDE THE CITY: All charges for operation and maintenance shall be uniform for all domestic or commercial Users, whether said Users are located within or without the City.~~

8-1-~~96~~86: BILLING, COLLECTION, AND TERMINATION OF UTILITY SERVICE: Billing, collection, and termination for utility service shall be processed pursuant to the City billing, collection, and termination policy established by Council Resolution.

8-1-~~97~~87: ~~PRETREATMENT CHARGES AND FEES~~RECOVERY OF COSTS: City may adopt reasonable fees for reimbursement of costs of setting up and operating the City's pretreatment program which may include:

(A) Fees for wastewater discharge permit applications including the cost of processing such applications;

. . .

8-1-~~98~~88~~:~~ ~~RECOVERY OF COSTS BY CITY~~FALSIFYING INFORMATION: Any person who knowingly makes any false statement, representation, or certification in any application, record, report and plan or other document filed or required to be maintained pursuant to this Chapter, or who falsified, tampers with, or knowingly renders inaccurate any monitoring device or method required under this Chapter shall be guilty of a misdemeanor.

8-1-~~99~~89~~:~~ ~~FALSIFYING INFORMATION~~LIMITATION OF LIABILITY: Nothing herein is intended to create any private duty to any customer or discharger or create any private right of

action on account of any failure by City, or its officers, employees, or agents to perform any duty or obligation set forth herein.

~~8-1-100: LIMITATION OF LIABILITY: Any person who violates this Chapter is guilty of a misdemeanor~~

~~8-1-101: PENALTY: Any person who violates this Chapter is guilty of a misdemeanor.~~

8-1-90: INJUNCTIVE RELIEF: When the Director finds that a User has violated, or continues to violate, any provision of this Chapter, a wastewater discharge permit or order issued hereunder, or any other pretreatment standard or requirement, City may petition the Seventh Judicial District of the State of Idaho, Bonneville County, through the City Attorney, for the issuance of a temporary or permanent injunction, as appropriate, which restrains or compels the specific performance of the wastewater discharge permit, order, or other requirement imposed by this Chapter on activities of the User. City may also seek such other action as is appropriate for legal or equitable relief, including a requirement for the User to conduct environmental remediation. A petition for injunctive relief shall not be a bar against, or a prerequisite for, taking any other action against a User.

8-1-91: CIVIL PENALTIES:

(A) A User which has violated or continues to violate any provision of this Chapter, a wastewater discharge permit, or order issued hereunder, or any other pretreatment standard or requirement shall be liable to City for a maximum civil penalty in an amount set from time to time by Resolution of the Council. In the case of a monthly or other long-term average discharge limit, penalties or fees shall accrue for each day during the period of the violation.

(B) To the fullest extent permitted by the Idaho Code, the Director may recover reasonable attorney fees, court costs, and other expenses associated with enforcement activities, including sampling and monitoring expenses and the cost of any actual damages incurred by the City.

(C) Filing a suit for civil penalties shall not be a bar against, or a prerequisite for, taking any other action against a User.

8-1-92: CRIMINAL PENALTIES:

(A) A User which has willfully or negligently violated any provision of this Chapter, a wastewater discharge permit, or order issued hereunder, or any other pretreatment standard or requirement shall, upon conviction, be guilty of a misdemeanor.

(B) A User which has willfully or negligently introduced any substance into the POTW which causes personal injury or property damage shall, upon conviction, be guilty of a misdemeanor.

This penalty shall be in addition to any other cause of action for personal injury or property damage available under State law.

(C) A User which knowingly made any false statements, representations, or certifications in any application, record, report, plan, or other documentation filed, or required to be maintained, pursuant to this Chapter, wastewater discharge permit, or order issued hereunder or who falsified, tampered with, or knowingly rendered inaccurate any monitoring device or method required under this Chapter shall, upon conviction, be guilty of a misdemeanor.

8-1-93: REMEDIES NON-EXCLUSIVE: The provisions in Sections 8-1-65 through 8-1-83 of this Chapter are not exclusive remedies. City reserves the right to take any, all, or any combination of these actions against a non-compliant User. Enforcement in response to pretreatment violations will generally be in accordance with City's enforcement response plan. However, City reserves the right to take other action against any User when the circumstances warrant. Further, City may take more than one enforcement action against any non-compliant User. These actions may be taken concurrently.

SECTION 2. Savings and Severability Clause. The provisions and parts of this Ordinance are intended to be severable. If any section, sentence, clause, or phrase of this Ordinance should be held to be invalid or unconstitutional by a court of competent jurisdiction, such invalidity or unconstitutionality shall not affect the validity or constitutionality of any other section, sentence, clause, or phrase of this Ordinance.

SECTION 3. Codification Clause. The City Clerk is instructed to immediately forward this Ordinance to the codifier of the official municipal code for proper revision of the Code.

SECTION 4. Publication. This Ordinance, or a summary thereof in compliance with Idaho Code, shall be published once in the official newspaper of the City, and shall take effect immediately upon its passage, approval, and publication.

SECTION 5. Effective Date. This Ordinance shall be in full force and effect from and after its passage, approval, and publication.

PASSED by the City Council and APPROVED by the Mayor of the City of Idaho Falls, Idaho, this _____ day of _____, 2020.

CITY OF IDAHO FALLS, IDAHO

_____

REBECCA L. NOAH CASPER, MAYOR

ATTEST:

_____
KATHY HAMPTON, CITY CLERK

(SEAL)

STATE OF IDAHO)
) ss:
County of Bonneville)

I, KATHY HAMPTON, CITY CLERK OF THE CITY OF IDAHO FALLS, IDAHO, DO HEREBY CERTIFY:

> That the above and foregoing is a full, true and correct copy of the Ordinance entitled, "AN ORDINANCE OF THE CITY OF IDAHO FALLS, IDAHO, AMENDING TITLE 8, CHAPTER 4, OF THE IDAHO FALLS CITY CODE TO CONFORM THE SEWER ORDINANCE TO IDAHO DEPARTMENT OF ENVIRONMENT QUALITY ADMINISTRATIVE JURISDICTION; AMENDING RELATED DEFINITIONS, PROCESSES, AND PENALTIES; PROVIDING SEVERABILITY, CODIFICATION, PUBLICATION BY SUMMARY, AND ESTABLISHING EFFECTIVE DATE."

(SEAL) _____
KATHY HAMPTON, CITY CLERK

IDAHO FALLS

MEMORANDUM

FROM: Chris H Fredericksen, Public Works Director

DATE: Monday, February 3, 2020

RE: Approval of the State/Local Agreement with Idaho Transportation Department for the W 17th Street and Rollandet Avenue Intersection Improvements

Council Action Desired

☐ Ordinance ☐ Resolution ☐ Public Hearing

☒ Other Action (Approval, Authorization, Ratification, etc)

Approval of an Agreement and Resolution and authorization for Mayor and City Clerk to sign both documents (or take other action deemed appropriate).

Description, Background Information & Purpose

Attached for your consideration is a State/Local Agreement and Resolution with the Idaho Transportation Department (ITD) for the development of the W 17th Street and Rollandet Avenue Intersection Improvements project. A safety audit of 17th Street in 2016 indicated a need to install a median curb and island in the intersection and create a left hand turn restriction. As a consequence of this traffic alteration, W 19th Street at the railroad crossing will receive increased traffic volume and this project will also improve the condition of this intersection near the railroad tracks.

Relevant PBB Results & Department Strategic Plan

☐ ☐ ☐ ☐ ☐ ☒ ☐ ☒

This agreement supports the community-oriented results of safe and secure community and reliable public infrastructure and transportation by improving the two intersections mentioned previously.

Interdepartmental Coordination

Project reviews will be conducted with all necessary city departments to ensure coordination of project activities.

Fiscal Impact

The total estimated cost of the project is $487,000.00. This agreement requires city financial contribution toward the project with a match rate of 7.34% for an estimated total of $35,746.00. The city match will be in the form of in-kind project development, construction management, and inspection services. A $2,000.00 initial deposit by the city is required to begin the project.

Legal Review

The Agreement has been reviewed by the City Attorney.

2-38-25-1-STR-2018-14
2020-6

STATE/LOCAL AGREEMENT
(PROJECT DEVELOPMENT)

PROJECT NO. A022(005)
INT 17TH ST & ROLLANDET
CITY OF IDAHO FALLS
BONNEVILLE COUNTY
KEY NO. 22005

PARTIES

THIS AGREEMENT is made and entered into this _____ day of _____, _____, by and between the IDAHO TRANSPORTATION BOARD, by and through the IDAHO TRANSPORTATION DEPARTMENT, hereafter called the State, and the CITY OF IDAHO FALLS, acting by and through its Mayor and Council, hereafter called the Sponsor.

PURPOSE

The Sponsor has requested that the State include in its Idaho Transportation Investment Program the Local Highway Safety Improvement Program (LHSIP) Project with Key No. 22005, described as Int 17th St. & Rollandet. Project development is to be performed by Consultant Engineers. The purpose of this Agreement is to set out the terms and conditions to accomplish the project development phase of this project.

NOTE: Securing the services of a consultant for project development services must follow the process outlined in the Idaho Transportation Department Guidelines for Local Public Agency Projects.

Since certain functions under this Agreement are to be performed by the State, requiring the expenditure of funds, and since the State can only pay for work associated with the State Highway System, the Sponsor is fully responsible for all costs incurred by the State related to the project.

Authority for this Agreement is established by Section 40-317 of the Idaho Code.

The Parties agree as follows:

SECTION I. GENERAL

1. It is necessary to develop construction plans and specifications in order that federal participation may be obtained in the construction costs of the project. Federal-aid for project development and right of way is available on this project.

2. Federal participation in the project is at the rate of 92.66%; local participation is 7.34%. Scheduled funding for this project is listed in the approved Idaho Transportation Investment Program, and subsequent revisions. Current ***estimated*** funding is as follows:

   a. Project Development - $68,000
   - (PE-$2,000, PL-$15,000, PC-$51,000)

   b. Right-of-Way - $15,000

   c. Utilities - $0

   d. Construction Engineering - $68,000
   - (CE-$2,000, CL-$16,000, CC-$33,000 & Cont.-$17,000)

   e. Construction - $336,000

   f. Total Estimated Project Costs - $487,000

3. The Sponsor's match for this project will be provided with cash and in-kind services up to the total of the match for the project(current estimate $35,746). In-kind services are itemized in the attached Exhibit A (ITD-2394, Request for Approval of In-Kind Work by Local Sponsor on Federal-Aid Projects).

4. Funds owed by the Sponsor shall be remitted to the State through the ITD payment portal at: *https://apps.itd.idaho.gov/PayITD* .

5. This project shall be designed to State Standards as defined in the current version of the Idaho Transportation Department's Design Manual, or as subsequently revised. The current version of the Design Manual can be viewed at the following web site: http://itd.idaho.gov/manuals/ManualsOnline.htm.

6. All information, regulatory and warning signs, pavement or other markings, and traffic signals required and warranted will be developed as a part of the plans, regardless of whether the work is done as a portion of the contract or by the Sponsor's forces.

7. If the project is terminated by the Sponsor prior to completion, the Sponsor shall repay to the State all federal funds received for the project, and shall be liable to the State for any un-reimbursed incidental expenses as provided for in Section II, Paragraph 1 of this Agreement.

8. Sufficient Appropriation. It is understood and agreed that the State and the Sponsor are governmental agencies, and this Agreement shall in no way be construed so as to bind or obligate the State or the Sponsor beyond the term of any particular appropriation of funds by the Federal Government or the State Legislature as may exist from time to time. The State and the Sponsor reserve the right to terminate this Agreement if, in its sole judgment, the Federal Government or the legislature of the State of Idaho fails, neglects or refuses to appropriate sufficient funds as may be required for the State to continue payments. Any such termination shall take effect immediately upon notice and be otherwise effective as provided in this Agreement.

SECTION II. That the State shall:

1. Provide the following services incidental to the project development:

   a. Assist Sponsor in the selection of a Consulting Engineer and negotiations as needed, and furnish the Agreement for Engineering Services and any supplements thereto, to be used between the Sponsor and Consultant Engineers on this project.

   b. Review Preliminary Environmental Evaluation and recommend other appropriate environmental documentation.

   c. Furnish to the engineers copies of materials test reports and other data applying to the project and available to the State.

   d. Provide a hearing officer to conduct a formal public hearing as necessary.

e. File with the Federal Highway Administration applications for exceptions to AASHTO Standards when appropriate.

f. If requested by the Sponsor, assist in negotiations with public carriers and utilities for agreements on behalf of the Sponsor.

g. Review the Consultant plans, estimates, reports and environmental studies, and issue notice of approval.

h. Supply roadway summary sheets and such standard drawings as may be required to supplement the plans.

i. Print and assemble plans, special provisions, specifications and contracts.

j. Advertise for bids and let the construction contract. Prior to construction, the parties will enter into a separate agreement covering responsibilities of the parties relating to construction.

2. Within sixty (60) days of receipt of appropriate documentation from the Sponsor showing expenditure of funds for project development, reimburse the Sponsor for eligible expenses at the approved Federal-aid rate.

3. Bill the Sponsor for costs incurred by the State under this Agreement for project development, if those costs exceed the amount set out in Section III, Paragraph 1.

4. Bill the Sponsor for any federal funds to be repaid by the Sponsor if the project is terminated by the Sponsor prior to completion, and the Sponsor has been reimbursed with federal funds for preliminary engineering and/or right-of-way acquisition.

5. Appoint the Local Highway Technical Assistance Council as the contract administrator for the State.

SECTION III. That the Sponsor shall:

1. Pay to the State, before the State begins the incidental services referred to in Section II, Paragraph 1, the sum of **TWO THOUSAND DOLLARS ($2,000)**, estimated to be the total expense to the State. In addition, pay to the State the cost of all incidental services provided by the State upon receipt of the billing provided for in Section II, Paragraph 3. These funds will be credited towards the Sponsor's match on the project.

2. Sponsor warrants that it will repay any federal reimbursements on this project if the project is terminated by the Sponsor prior to completion.

3. With the assistance of the State, hire a consultant for development of the project.

4. Make timely payment of all consultant invoices throughout the design of the project. Periodically the Sponsor may submit allowable Consultant invoices and receipts to the State showing payment of same. The State will reimburse the Sponsor for eligible expenses less the Sponsor's match.

5. Advertise for and hold a formal public hearing if required in accordance with the Idaho Open Meetings Law.

6. If requested by a utility company, hold hearings before the City Council or Board of Commissioners. The Sponsor will issue orders to the utilities.

7. Right of Way

   a. Acquire all rights-of-way and easements needed to provide for construction and maintenance of the project.

   b. Employ an approved certified general appraiser to complete all appraisals and an independent certified general appraiser to review appraisals required for the project unless the property value meets the requirements in Idaho Code Section 54-4105(5) and 49 CFR 24.102.

c. Review the appraisal reviewer's statement of the estimated fair market value and approve an amount to be just compensation for each parcel to be acquired.

d. Provide a monthly right-of-way status report (ITD-2161), and forward it to the project manager.

e. Before initiating negotiations for any real property required for right-of-way, establish, in writing, an amount considered to be just compensation, under Idaho law, Federal Regulations or any other applicable law, and make a prompt offer to acquire the property for the full amount established.

f. Make a good faith effort, in accordance with Real Property Acquisition Policies Act of 1970, to acquire the real property by negotiation. Employ a State Approved Negotiator if necessary.

g. Inform the property owner, in those cases where he indicates a willingness to donate a portion of his real property for rights-of-way, of all his rights including his right to full compensation in money for land and damages, if any, in accordance with Idaho Code.

h. Provide relocation assistance and payments for any displaced person, business, farm operation, or nonprofit organization in accordance with the Uniform Relocation Assistance and Real Property Acquisition Policies Act of 1970; 49 CFR 24; 23 CFR 710; the Idaho Real Property Acquisition Act of 1971; Title 40, Chapter 20; and Title 58, Chapter 11; Idaho Code, as amended, and regulations promulgated thereunder. No individual or family shall be displaced until decent, safe and sanitary replacement housing is available to the relocatees for immediate occupancy. In addition, advise the State of any relocations required by the project and upon request of the State, authorize the State to negotiate on the Sponsor's behalf for all relocation assistance and payments, the cost of which will be assumed by the Sponsor at the time of negotiation.

i. Ensure to the greatest extent practicable that no person lawfully occupying the real property shall be required to move from his home, farm or business without at least ninety (90) days written notice prior to advertisement of the project.

8. Before advertisement for bids, provide a certification that all rights-of-way, easements, permits, materials sources and agreements necessary for the construction of the project have been acquired in accordance with the provisions of this Section. Provide a value of any right-of-way donations obtained, which may be credited as a matching share.

9. Evaluate the impact the project might have on the quality of the human environment and prepare and furnish to the State an environmental evaluation that includes cultural resources and any other documentation required by the National Environmental Policy Act.

10. At all required public hearings, furnish all necessary exhibits and provide for a representative of the Sponsor to describe the project; present information about the location and design, including alternates; discuss the tentative schedules for rights-of-way acquisitions and construction; discuss the Sponsor's relocation assistance program; discuss the economic, sociological, and environmental effects of the project; and answer all questions concerning the project.

11. Comply with Attachment 1 attached hereto and made a part hereof. By this agreement Sponsor agrees to comply with and be bound to the Civil Rights provisions of Title VI of the Federal Code and to generally insert those provisions in all contracts that it enters into that are federally funded on this project. If property acquired for this project with Federal financial assistance is transferred, the recipient of the property will be subject to Attachment 1 if the property is used for the same purpose it was originally acquired or for another purpose involving similar services or benefits to the general public. Sponsor should contact the State prior to disposing of any property acquired under this agreement.

12. Maintain all project records, including source documentation for all expenditures and in-kind contributions, for a period of three (3) years from the date of final acceptance. If any litigation, claim, negotiation, or audit has been started before expiration of the three-year period, the records shall be retained until completion of the action and resolution of all issues that arise from it.

13. Comply with all other applicable State and Federal regulations.

EXECUTION

This Agreement is executed for the State by its Highways Construction & Operations Division Administrator, and executed for the Sponsor by the Mayor, attested to by the City Clerk, with the imprinted Corporate Seal of the City of Idaho Falls.

IDAHO TRANSPORTATION DEPARTMENT

_____
Division Administrator
Highways Construction & Operations

ATTEST:

_____
Clerk

(SEAL)

By regular/special meeting
on _____.

CITY OF IDAHO FALLS

_____
Mayor

hm:22005 SLAPD.docx

RESOLUTION

WHEREAS, the Idaho Transportation Department, hereafter called the **STATE**, has submitted an Agreement stating obligations of the **STATE** and the **CITY OF IDAHO FALLS**, hereafter called the **CITY**, for development of Int 17th St & Rollandet; and

WHEREAS, the **STATE** is responsible for obtaining compliance with laws, standards and procedural policies in the development, construction and maintenance of improvements made to the Federal-aid Highway System when there is federal participation in the costs; and

WHEREAS, certain functions to be performed by the **STATE** involve the expenditure of funds as set forth in the Agreement; and

WHEREAS, The **STATE** can only pay for work associated with the State Highway system; and

WHEREAS, the **CITY** is fully responsible for its share of project costs; and

NOW, THEREFORE, BE IT RESOLVED:

1. That the Agreement for Federal Aid Highway Project A022(005) is hereby approved.

2. That the Mayor and the City Clerk are hereby authorized to execute the Agreement on behalf of the **CITY.**

3. That duly certified copies of the Resolution shall be furnished to the Idaho Transportation Department.

CERTIFICATION

I hereby certify that the above is a true copy of a Resolution passed at a *regular, duly* called special (X-out non-applicable term) meeting of the City Council, City of Idaho Falls, held on _____, _____.

(Seal)

_____
City Clerk

ATTACHMENT 1

1050.20 Appendix A:

During the performance of work covered by this Agreement, the Consultant for themselves, their assignees and successors in interest agree as follows:

1. **Compliance With Regulations**. The Consultant shall comply with all regulations of the United States Department of Transportation relative to Civil Rights, with specific reference to Title 49 CFR Part 21, Title VI of the Civil Rights Act of 1964 as amended, and Title 23 CFR Part 230 as stated in the ITD EEO Special Provisions and Title 49 CFR Part 26 as stated in the appropriate ITD DBE Special Provisions. http://apps.itd.idaho.gov/apps/ocr/index.aspx

2. **Nondiscrimination**. The Consultant, with regard to the work performed by them during the term of this Agreement, shall not in any way discriminate against any employee or applicant for employment; subcontractor or solicitations for subcontract including procurement of materials and equipment; or any other individual or firm providing or proposing services based on race, color, sex, national origin, age, disability, limited English proficiency or economic status.

3. **Solicitations for Subcontracts, Including Procurement of Materials and Equipment.** In all solicitations, either by bidding or negotiation, made by the Consultant for work or services performed under subcontract, including procurement of materials and equipment, each potential subcontractor or supplier shall be made aware by the Consultant of the obligations of this Agreement and to the Civil Rights requirements based on race, color, sex, national origin, age, disability, limited English proficiency or economic status.

4. **Information and Reports.** The Consultant shall provide all information and reports required by regulations and/or directives and sources of information, and their facilities as may be determined by the State or the appropriate Federal Agency. The Consultant will be required to retain all records for a period of three (3) years after the final payment is made under the Agreement.

5. **Sanctions for Noncompliance.** In the event the Consultant or a Subconsultant is in noncompliance with the EEO Special Provisions, the State shall impose such sanctions as it or the appropriate Federal Agency may determine to be appropriate, including, but not limited to:

   - Withholding of payments to the Consultant until they have achieved compliance;
   - Suspension of the agreement, in whole or in part, until the Consultant or Subconsultant is found to be in compliance, with no progress payment being made during this time and no time extension made;
   - Cancellation, termination or suspension of the Agreement, in whole or in part;
   - Assess against the Consultant's final payment on this Agreement or any progress payments on current or future Idaho Federal-aid Projects an administrative remedy by reducing the final payment or future progress payments in an amount equal to 10% of this agreement or $7,700, whichever is less.

6. **Incorporation of Provisions.** The Consultant will include the provisions of paragraphs 1 through 5 above in every subcontract of $10,000 or more, to include procurement of materials and leases of equipment unless exempt by the Acts, the Regulations, and directives pursuant thereto. The Consultant shall take such action with respect to any subcontract or procurement as the State or the appropriate Federal Agency may direct as a means of enforcing such provisions, including sanctions for noncompliance. Provided, that if the Consultant becomes involved in, or is threatened with, litigation with a subcontractor or supplier as a result of such direction, the Consultant may request the State to enter into any litigation to protect the interest of the State. In addition, the Consultant may request the United States to enter into the litigation to protect the interests of the United States.

1050.20 Appendix E

During the performance of this contract, the Consultant, for itself, its assignees, and successors in interest (hereinafter referred to as the "contractor") agrees to comply with all non- discrimination statutes and authorities; including but not limited to:

Pertinent Non-Discrimination Authorities:

- Title VI of the Civil Rights Act of 1964 (42 U.S.C. § 2000d et seq., 78 stat. 252), (prohibits discrimination on the basis of race, color, national origin); and 49 CFR Part 21.
- The Uniform Relocation Assistance and Real Property Acquisition Policies Act of 1970, (42 U.S.C. § 4601), (prohibits unfair treatment of persons displaced or whose property has been acquired because of Federal or Federal-aid programs and projects);
- Federal-Aid Highway Act of 1973, (23 U.S.C. § 324 et seq.), (prohibits discrimination on the basis of sex);
- Section 504 of the Rehabilitation Act of 1973, (29 U.S.C. § 794 et seq.), as amended, (prohibits discrimination on the basis of disability); and 49 CFR Part 27;
- The Age Discrimination Act of 1975, as amended, (42 U.S.C. § 6101 et seq.), (prohibits discrimination on the basis of age);
- Airport and Airway Improvement Act of 1982, (49 USC § 4 71, Section 4 7123), as amended, (prohibits discrimination based on race, creed, color, national origin, or sex);
- The Civil Rights Restoration Act of 1987, (PL 100-209), (Broadened the scope, coverage and applicability of Title VI of the Civil Rights Act of 1964, The Age Discrimination Act of 1975 and Section 504 of the Rehabilitation Act of 1973, by expanding the definition of the terms "programs or activities" to include all of the programs or activities of the Federal-aid recipients, sub-recipients and contractors, whether such programs or activities are Federally funded or not);
- Titles II and III of the Americans with Disabilities Act, which prohibit discrimination on the basis of disability in the operation of public entities, public and private transportation systems, places of public accommodation, and certain testing entities (42 U.S.C. §§ 12131-12189) as implemented by Department of Transportation regulations at 49 C.F.R. parts 37 and 38;
- The Federal Aviation Administration's Non-discrimination statute (49 U.S.C. § 47123) (prohibits discrimination on the basis of race, color, national origin, and sex);
- Executive Order 12898, Federal Actions to Address Environmental Justice in Minority Populations and Low-Income Populations, which ensures discrimination against minority populations by discouraging programs, policies, and activities with disproportionately high and adverse human health or environmental effects on minority and low-income populations;
- Executive Order 13166, Improving Access to Services for Persons with Limited English Proficiency, and resulting agency guidance, national origin discrimination includes discrimination because of limited English proficiency (LEP). To ensure compliance with Title VI, you must take reasonable steps to ensure that LEP persons have meaningful access to your programs (70 Fed. Reg. at 74087 to 74100);
- Title IX of the Education Amendments of 1972, as amended, which prohibits you from discriminating because of sex in education programs or activities (20 U .S.C. 1681 et seq).

Implementation Procedures
This agreement shall serve as the Sponsor's Title VI plan pursuant to 23 CFR 200 and 49 CFR 21.

For the purpose of this agreement, "Federal Assistance" shall include:

1. grants and loans of Federal funds,
2. the grant or donation of Federal property and interest in property,
3. the detail of Federal personnel,
4. the sale and lease of, and the permission to use (on other than a casual or transient basis), Federal property or any interest in such property without consideration or at a nominal consideration, or at a consideration which is reduced for the purpose of assisting the Sponsor, or in recognition of the public interest to be served by such sale or lease to the Sponsor, and
5. any Federal agreement, arrangement, or other contract which has as one of its purposes, the provision of assistance.

The Sponsor shall:

1. Issue a policy statement, signed by the Sponsor's authorized representative, which expresses its commitment to the nondiscrimination provisions of Title VI. The policy statement shall be circulated throughout the Sponsor's organization and to the general public. Such information shall be published where appropriate in languages other than English.

2. Take affirmative action to correct any deficiencies found by ITD or the United States Department of Transportation (USDOT) within a reasonable time period, not to exceed 90 days, in order to implement Title VI

compliance in accordance with this agreement. The Sponsor's authorized representative shall be held responsible for implementing Title VI requirements.

3. Designate a Title VI Coordinator who has a responsible position in the organization and easy access to the Sponsor's authorized representative. The Title VI Coordinator shall be responsible for initiating and monitoring Title VI activities and preparing required reports.

4. Adequately implement the civil rights requirements.

5. Process complaints of discrimination consistent with the provisions contained in this agreement. Investigations shall be conducted by civil rights personnel trained in discrimination complaint investigation. Identify each complainant by race, color, national origin, sex, or disability; the nature of the complaint; the date the complaint was filed; the date the investigation was completed; the disposition; the date of the disposition; and other pertinent information. A copy of the complaint, together with a copy of the Sponsor's report of investigation, will be forwarded to ITD's EEO Office – External Programs within 10 days of the date the complaint was received by the Sponsor.

6. Collect statistical data (race and sex) of participants in, and beneficiaries of the Transportation programs and activities conducted by the Sponsor.

7. Conduct Title VI reviews of the Sponsor and sub-recipient contractor/consultant program areas and activities. Revise where applicable, policies, procedures and directives to include Title VI requirements.

8. Attend training programs on Title VI and related statutes conducted by ITD's EEO Office.

9. Participate in an annual review of the Sponsor's Title VI Program, the purpose of which is to determine to what extent the Sponsor has complied with Title VI requirements including the ADA. This review is conducted one year from the date of approval of the Non-Discrimination Agreement and then annually on the same date. The format for the Title VI review will be provided each year to the Sponsor for completion. A determination of compliance will be made by ITD's EEO Office based on the information supplied in the review. This review of the Sponsor's Title VI Program may also include an on-site review in order to determine compliance.

Discrimination Complaint Procedure

Any person who believes that he or she, individually, as a member of any specific class, or in connection with any disadvantaged business enterprise, has been subjected to discrimination prohibited by Title VI of the Civil Rights Act of 1964, the American with Disabilities Act of 1990, Section 504 of the Vocational Rehabilitation Act of 1973 and the Civil Rights Restoration Act of 1987, as amended, may file a complaint with the Sponsor. A complaint may also be filed by a representative on behalf of such a person. All complaints will be referred to the Sponsor's Title VI Coordinator for review and action.

In order to have the complaint consideration under this procedure, the complainant must file the complaint no later than 180 days after:

a) The date of alleged act of discrimination; or
b) Where there has been a continuing course of conduct, the date on which that conduct was discontinued.

In either case, the Sponsor or his/her designee may extend the time for filing or waive the time limit in the interest of justice, specifying in writing the reason for so doing.

Complaints shall be in writing and shall be signed by the complainant and/or the complainant's representative. Complaints shall set forth as fully as possible the facts and circumstances surrounding the claimed discrimination. In the event that a person makes a verbal complaint of discrimination to an officer or employee of the Sponsor, the person shall be interviewed by the Title VI Coordinator. If necessary, the Title VI Coordinator will assist the person in reducing the complaint to writing and submit the written version of the complaint to the person for signature. The complaint shall then be handled according to the Sponsor's investigative procedures.

Within 10 days, the Title VI Coordinator will acknowledge receipt of the allegation, inform the complainant of action taken or proposed action to process the allegation, and advise the complainant of other avenues of redress available, such as ITD and USDOT.

The Sponsor will advise ITD within 10 days of receipt of the allegations. Generally, the following information will be included in every notification to ITD:

a) Name, address, and phone number of the complainant.
b) Name(s) and address(es) of alleged discriminating official(s).
c) Basis of complaint (i.e., race, color, national origin or sex)
d) Date of alleged discriminatory act(s).
e) Date of complaint received by the Sponsor.
f) A statement of the complaint.
g) Other agencies (state, local or Federal) where the complaint has been filed.
h) An explanation of the actions the Sponsor has taken or proposed to resolve the issue raised in the complaint.

Within 60 days, the Title VI Coordinator will conduct an investigation of the allegation and based on the information obtained, will render a recommendation for action in a report of findings to the Sponsor's authorized representative. The complaint should be resolved by informal means whenever possible. Such informal attempts and their results will be summarized in the report of findings.

Within 90 days of receipt of the complaint, the Sponsor's authorized representative will notify the complainant in writing of the final decision reached, including the proposed disposition of the matter. The notification will advise the complainant of his/her appeal rights with ITD, or USDOT, if they are dissatisfied with the final decision rendered by the Sponsor. The Title VI Coordinator will also provide ITD with a copy of this decision and summary of findings upon completion of the investigation.

Contacts for the different Title VI administrative jurisdictions are as follows:

Idaho Transportation Department
Equal Employment Opportunity Office – External Programs
EEO Manager
PO Box 7129
Boise, ID 83707-1129
208-334-8884

Federal Highway Administration
Idaho Division Office
3050 Lakeharbor Lane, Suite 126
Boise, ID 83703
208-334-9180

Sanctions
In the event the Sponsor fails or refuses to comply with the terms of this agreement, the ITD may take any or all of the following actions:

1. Cancel, terminate, or suspend this agreement in whole or in part;
2. Refrain from extending any further assistance to the Sponsor under the program from which the failure or refusal occurred until satisfactory assurance of future compliance has been received from the Sponsor.
3. Take such other action that may be deemed appropriate under the circumstances, until compliance or remedial action has been accomplished by the Sponsor;
4. Refer the case to the Department of Justice for appropriate legal proceedings.

Distribution: EEO Office
Revised: 03-09, 08-10, 08-17

Exhibit A

ITD 2394 (Rev. 06-14)
itd.idaho.gov

Request for Approval of In-Kind Work By Local Sponsor on Federal-Aid Projects

Key Number	Project Number	Project Name
22005	A022(005)	17th & Rollandet Intersection Improvements

Local Agency Name	
City of Idaho Falls	☐ Engineer Services During Project Development ☒ Construction Engineering and Inspection, Sampling, and Testing

Nature of Work to be Performed by Local Agency
Construction Management and Inspection Services

Total Estimated Cost – **Note:** Costs for these services that exceed the match required on the project are not eligible for reimbursement
Up to $44,400 for services (see attached) anticipated match is understood to be up to $36,350 or 7.34% of the project total, whichever is lower.

List the employees who will be providing services. List employees' qualifications, certifications, and experience for the work to be performed. Attach additional pages if necessary.

Name	Qualifications and Certifications	Experience (If listing specific project experience, indicate if the project was federally funded)	Estimated Cost*
Chris Canfield, P.E.	PE License # 10551 & WAQTC # 20098	7 years at ITD, 8 years as a consultant and 6.5 years at the City administering Federal funded projects (design and construction). See attached	see attached Exhibits A & B
Kent Fugal, P.E.	PE license # WAQTC # 22115	9.5 yrs with Cities & 20 years with consultant working on the design of Federal aid projects.	see attached Exhibits A & B
Kenny Roberts, PLS	PLS licence # 9755	Consultant surveyor for 9 years and then 17 years as City surveyor on federal aid projects. (see attached)	see attached Exhibits A & B
Gary Olson	WAQTC # 43665	Chief Inspector for City 7 years, 10 years inspection as consultant on federal aid projects. See attahced	see attached Exhibits A & B
Robert Cox	WAQTC # 20018	See attached sheets	see attached Exhibits A & B
See attached sheets for additional personnel.	See attached sheets for additional personnel.	See attached sheets for additional personnel.	see attached Exhibits A & B

*Provide separate page with details – see the attached exhibits for examples and for documentation requirements upon completion of work

Reviewed By - Project Manager's Printed Name	Project Manager's Signature	Date
Chris Canfield, P.E.	Chris Canfield	10/29/19
In-Kind Work Approved** ☒ Yes ☐ No	**Approval Authority Engineer's Printed Name** Monica Crider	**Engineer's Signature** Monica Crider **Date** 1/15/2020

**Approval Authority:
Local Projects Administered by LHTAC – Contract Services Engineer
Local Projects Administered by the District – District Engineer

Christopher D. Canfield, PE

Professional Registrations

ID PE #10551

Education

MS, Environmental Engineering
Idaho State University, 1998

BS, Civil Engineering - Emphasis in
Structures and Geotechnics
Idaho State University, 1996

Professional Certifications

ITD Inspector Qualifications

- C. & S. (2001-2012)
- C.A. (2003-2013)
- E. & B. (2002-2012)
- E. Wetlands (2005-2010)
- TCI. (2002-2013)
- S.T. & P.P. (2002-2012)

Work History

Assistant Public Works Director; City of Idaho Falls
May 2013 - PRESENT

Project Engineer
J-U-B ENGINEERS, Inc.
May 2005-present May 2013

EIT/Project Engineer/Traffic Engineer; Idaho Transportation Department 1998- May 2005

Mr. Canfield joined the City of Idaho Falls in May 2013 and aids in the design and Construction of City local federal aid projects. He worked as a consultant for 8 years from in May of 2005 to 2013 manage a Construction Engineering & Inspection Group administering Federal Aid projects across the state. His prior experience includes seven years at the Idaho Transportation Department (ITD) where he was charged with providing engineering support on numerous highway construction projects, as well as managing an Inspection and maintenance crew.

Relevant Federal Aid Projects Supported with Idaho Falls:

- 12472 Pancheri Bridge over the East Lateral Canal (2013/2014)
- 13133 ADA Pedestrian Ramps & Copncrete Improvements Citywide (2014)
- 11686 Pancheri Rd.; Bellin Rd to Skyline (2014/2015)
- 12473 17th St Holmes to Snake River Bridge (2013)

Relevant Federal Aid Projects Prior to the City of Idaho Falls:

See attached sheet.

Project Descriptions	Construction Time Date	Services							Client
		Testing	QC/QA	Inspection	Weekly SWPPP Inspection	Records Inspection	Contract Administration	3rd Party SWPPP Inspection	
36th Street Pedestrian Bridge	July 2010 - April 2011	•	•	•	•	•	•		ITD D-3 Region 1
3700 N; 2000 E. to 2050 E., Filer	Sept 2010 - Oct 2010		•	•			•		LHTAC/ City of Filer
Blacks Creek Rest Area	2007							•	ITD D-3 Region 1
Canyon Creek Bridge, N of Mtn Home	Nov 2010 - April 2011	•		•	•				ITD D-3 Res 2/LHTAC/ MHHD
Conkling Road Overlay	Sept 2010 - Oct 2010		•	•			•		LHTAC
Eckert to Amity Bike Path Extension	Nov 2006-Jun 2007	•	•	•	•	•	•		Ada County
FEMA Silver City Road Reconstruction	2006	•	•	•	•	•	•		Owyhee County
Franklin & 21st Avenue Intersection Stages 1 thru 3	2008-2010	•	•	•	•	•	•		ITD D-3 Res 3; Caldwell
FY 10 ACHD Overlays	June 2010 - Nov 2010		•	•					ITD/ACHD
I-84, Black Cat and Robinson Bridges Reconstruction	2008-2009	•	•	•	•	•	•		ITD D-3 Res 3
I-84, Eagle Exit Ramps	Mar-Nov 2007	•	•	•	•	•	•		ITD D-3 Res 1
I-84, Garrity Interchange to Ten Mile Overpass Median Reconstruction	2008-2009	•	•	•	•	•	•		ITD D-3 Res 3
I-84, Garrity to Ten Mile Reconstruction	2008-2009	•	•	•	•	•	•		ITD D-3 Res 3
I-84, Meridian to Garrity Mill and Widening	2007-2008	•	•	•	•	•	•		ITD D-3 Res 3
I-84, MP 17.6 to Caldwell	2007							•	ITD D-3 Res 2
I-84, Ten Mile Creek Drain Widening	Jan-Apr 2008	•	•	•	•	•	•		ITD D-3 Res 3
I-84, Ten Mile to Meridian Reconstruction	2008-2009	•	•	•			•		ITD D-3 Res 4
I-90, Washington State Line to Sherman Ave., Kootenai Co.	2007-2008			•					ITD D-1
Indian Creek, 11th Avenue and 21st Avenue Bridges	Apr 2008-2009	•	•	•	•	•	•		ITD D-3 Res 3; Caldwell
Kings Corner Railroad Overpass	2005-2006	•	•	•	•	•	•		City of Nampa
Main St.; Boise Ave. to Washington, Emmett	April 2010 - August 2011	•	•	•	•	•	•		ITD D-3/LHTAC/Emmett
O'Gara Road Overlay	September 2010		•	•			•		LHTAC
Pioneer Corridor Ped/Bike Improvement, Boise	Aug 2010 - April 2011	•	•	•	•	•	•		ITD D-3 Res 1/Boise CCDC
SH-21 Warm Springs to Diversion Dam and Federal Way to I-84	Jul-Sep 2009	•		•	•				ITD D-3 Res 1
SH-55 Main Street, Donnelly	2009							•	ITD D-3 Res 4
SH-44, Chinden Boulevard to State Street and Junction SH-55N to Glenwood	Jun-Aug 2009	•		•					ITD D-3 Res 1
SH-55, Marsing to Sunnyslope Cv.	2007							•	ITD D-3 Res 2
STC 2714; Center St., Main to Ash St., Kimberly	May 2010 - Oct 2010		•	•		•	•		ITD D-4/LHTAC/Kimberly
STC 7808, N Middleton Rd; Jct SH-44 to Mill Slough & STC 7807, Int. Cemetary Rd & SH-44, Middleton	Aug. 2010 - Dec. 2010	•	•	•	•	•	•		ITD D-3 Res 3/Middleton
Strike Dam Cutoff Rd, Phases I & III	March 2010 - Sept 2010	•	•	•	•	•	•		ITD D-3 Res 2/LHTAC/MHHD
I-84; Ten Mile I.C.	Sept 2009 - July 2011	•	•	•	•	•	•		ITD D-3 Res 4
U.S. 20, Broadway Avenue, Rossi Street to Ridenbaugh Canal	Aug-Sep 2007	•		•					ITD D-3 Res 1
U.S. 20, Cat Creek Summit	2007							•	ITD D-3 Res 2
U.S. 20, Cloverdale Road to Hewlett-Packard Main Entrance	Mar-Oct 2007	•		•					ITD D-3 Res 1
Meridian WWTP Filters Building	June 2011 - Dec 2011			•	•				City of Meridian
Meridian WWTP Secondary Clarifiers Retrofit	July 2011 - Present			•	•				City of Meridian
Meridian WWTP Grit Classifier	August 2011 - Dec 2011			•	•				City of Meridian
Buhl WWTP	2010-2011		•	•			•		City of Buhl
Filer WWTP	2010-2011		•	•	•		•		City of Filer
Garfield St Bridge, Idaho Falls	Nov 2011- Present	•	•	•	•	•	•		City of Idaho Falls / LHTAC
Watson St. Bridge	June 2010 - October 2011	•	•	•		•	•		ITD D-2/LHTAC/Cul De Sac

Kent J. Fugal, P.E., PTOE

Professional Registrations

- Idaho PE 9247 (1999)
- Utah PE 177864 (1994)

Education

- BS (1989), Civil Engineering, Brigham Young University
- MS (1990), Civil Engineering, Brigham Young University

Professional Certifications

- PTOE (2000)

Work History

- 9/2011 – Present, City of Idaho Falls
- 4/2004 – 9/2011, Project Engineering Consultants
- 7/2001 – 4/2004, J-U-B Engineers
- 4/2001 – 7/2001, City of Glendale, Arizona
- 11/1997 – 4/2001, MK Centennial/Washington Group
- 4/1995 – 11/1997, Pleasant Grove City, Utah
- 4/1988 – 4/1995, Horrocks Engineers

Mr. Kent Fugal joined the City of Idaho Falls in 2011 and aids in the design and Construction of City local federal aid projects. He works as the City Engineer. Prior to that, he worked as a consultant for over 19 years and in local government for three years. He served as the project manager, deputy project manager, traffic discipline manager, or project engineer for many federal aid projects as a consultant. In his local government experience, he has served as the agreement administrator, managing the work of consultants on federal aid projects. He has a broad background in traffic engineering and the design of roadways, drainage systems, utilities, traffic signals and roundabouts, as well as general civil and municipal engineering.

Relevant Federal Aid Projects Supported with Idaho Falls:

- 11155 John Adams Pkwy Bridge over the Idaho Canal (construction 2012/2013)
- 11247 Garfield St Bridge over the Idaho Canal (construction 2011/2012)
- 12472 Pancheri Bridge over the East Lateral Canal (design 2011-2013, construction 2013/2014)
- 13133 ADA Pedestrian Ramps & Concrete Improvements Citywide (2014)
- 11686 Pancheri Dr.; Bellin Rd to Skyline Dr (design 2011-2014)
- 12473 17th Street Rehabilitation Pancheri Bridge to Holmes Ave (2013)
- 14052 1st St & Holmes Ave Traffic Signal Reconstruction (design 2014-)
- 13132 Grandview Dr Skyline Dr to Saturn Ave (design 2013-)

Relevant Federal Aid Projects Prior to the City of Idaho Falls:

- Greenhurst Rd/S Powerline Rd and Greenhurst Rd/Southside Blvd Signals, Nampa (2004-2006)
- Sand Creek Byway, Sandpoint (traffic/pre-design support 2000-2001)

- WYE Interchange, Stage 2, Boise (construction phasing & work zone traffic control 1999-2001)
- SH-75 – Alturas to Timber Way, Blaine County (traffic signal, signing & striping, work zone traffic control 1999-2001)
- US-93 Twin Falls Alternate Route, Twin Falls (intersection and signing & pavement marking design 200-2001)
- US-95 Copeland NE – Corridor Study, Boundary County (corridor development and management plan 2000-2001)
- I-84 Corridor Study, Ada and Canyon Counties (1999-2000)
- 10600 South – 1300 East to 1750 East, Sandy, Utah (design 2010-2011)
- I-80 Climbing Lanes, Salt Lake and Summit Counties, Utah (design 2010-2011)
- 12300 South "Thru-Turn" Intersection, Draper, Utah (design 2010-2011)
- 30th/31st Streets and Wall Avenue, Ogden, Utah (design 1997-1999)
- Signal and Roadway Upgrades at SR-30 and 600 West, Logan, Utah (design 1997-1998)
- Signals and Roadway Upgrades at Three Locations; SR-48, SR-154, and SR-172, Salt Lake County, Utah (design 1998-1999)
- Signals and Roadway Upgrades at Three Locations on US-89; I-84 Eastbound, I-84 Westbound, and Nicholls Road, Weber County, Utah (design 1997)
- Signals and Roadway Upgrades in Brigham City and Slaterville, Box Elder and Weber Counties, Utah (design 1997-1998)
- Cache Valley Corridor Study, Cache County, Utah (design 1998-1999)
- University Avenue Interchange, Provo, Utah (design and environmental studies/documentation 1993-1995)
- Union Pacific Railroad Crossing Closures/ Consolidations, Utah County, Utah (design and environmental studies/documentation 1994)
- 1100 West, Weber County, Utah (environmental studies/documentation 1994-1995)
- Hastings Road, Grand County, Utah (environmental studies/documentation 1994)

Mr. Gary Olson joined the City of Idaho Falls in 2013 as the City Chief Inspector on City and local federal aid projects. He has over 10 years of experience in Inspection support on Federal aid projects as a Consultant prior to his tie with the City of Idaho Falls.

Relevant Federal Aid Projects Supported with Idaho Falls:

- 12472 Pancheri Bridge over the East Lateral Canal (2013/2014)
- 12473 17th St. Holmes to the Snake River Bridge (2013)
- 11155 John Adams Parkway Bridge over the Idaho Canal (2013)
- 13133 ADA Pedestrian Ramps & Concrete Improvements Citywide (2014)
- 11686 Pancheri Rd.; Bellin Rd to Skyline (2014/2015)

Professional Certifications

- WAQTC # 43665

Gary Olson (Qualification Number: 43,665)

ITD Inspector Qualifications

C. & S. (Original Qualification: Nov 2013 Expires: Nov 2018)

C.A. (Original Qualification: Oct 2013 Expires: Oct 2018)

E. & B. (Original Qualification: Oct 2013 Expires: Oct 2018)

S.T.& P.P. (Original Qualification: Nov 2013 Expires: Nov 2018)

TCI (Original Qualification: Oct 2013 Expires: Oct 2018)

WAQTC Sampler/Tester Qualifications

ACI-CFT (Original Qualification: Sep 2010 Expires: Sep 2015)

AgTT (Original Qualification: Feb 2009 Expires: Mar 2019)

AsTT (Original Qualification: Feb 2011 Expires: Feb 2016)

AsTT II (Original Qualification: Feb 2011 Expires: Feb 2016)

CLTT (Original Qualification: Jan 2012 Expires: Jan 2017)

DTT (Original Qualification: Apr 2012 Expires: Apr 2017)

EBTT (Original Qualification: Mar 2012 Expires: Mar 2017)

Mr. Michael A. Carlile joined the City of Idaho Falls in 2008 and aids in the design and inspection of City local federal aid projects. He works as a Design Tech in GIS & Inspector with the City.

Relevant Federal Aid Projects Supported with Idaho Falls:

- 12472 Pancheri Bridge over the East Lateral Canal (2013/2014)
- 13133 ADA Pedestrian Ramps & Concrete Improvements Citywide (2014)
- 11686 Pancheri Rd.; Bellin Rd to Skyline (2014/2015)

Education

BS in Geography from Utah State University, with a Minor in Geographic Information Science

Professional Certifications

- WAQTC # 23205

Michael Carlile (Qualification Number: 23,205)

ITD Inspector Qualifications

C. & S. (Original Qualification: Nov 2013 Expires: Nov 2018)

C.A. (Original Qualification: Nov 2013 Expires: Nov 2018)

TCI (Original Qualification: Nov 2013 Expires: Nov 2018)

WAQTC Sampler/Tester Qualifications

ACI-CFT (Original Qualification: Oct 2013 Expires: Oct 2018)

AgTT (Original Qualification: Apr 2014 Expires: Apr 2019)

Education

High School Graduate
Courses at EITC

Professional Certifications

Forklift Safety & Certification, Lifting & Ergonomics, Fire Safety, Fall Protection, OSHA, HazWoper 40 hr., GERT, Confined Spaces, Adult CPR and Workplace First Aid

Work History

- 2010-2013 Babcock Services, Inc., Office Administrator
- 2003-2009 CH2M HILL, Inc. and Subsidiaries, Office Admin. / Project Assist. / Communications Specialist / Community Advocacy / Marketing Coordinator.
- 1993-2003 Idaho Material Handling, Inc., Office Manager / Administrator
- 1992-1993 Daton Payroll Services, Payroll Customer Service Rep. / Payroll Supervisor
- 1990-1992 Martin Marietta, Payroll / Accounting Clerk
- 1989-1990 Ferrin-Manuel and Associates, Accounting Clerk / Office Manager
- 1988-1989 CGK, Inc., Full Charge Bookkeeper
- 1987-1988 Action Air, Inc., Receptionist/Accounting Clerk

Ms. Tami Nichols joined the City of Idaho Falls in May of 2013 and aids in the design and Construction of City local federal aid projects. She works as an Administrative Support/Document Controls with the City. Prior to that, she worked as a consultant for 10 years from 2003 to 2013 as a Project Assistant administering Federal Aid projects. Her prior experience includes 0 years at the Idaho Transportation Department (ITD).

Relevant Federal Aid Projects Supported with Idaho Falls:

- 12472 Pancheri Bridge over the East Lateral Canal (2013/2014)
- 13133 ADA Pedestrian Ramps & Copncrete Improvements Citywide (2014)
- 11686 Pancheri Rd.; Bellin Rd to Skyline (2014/2015)

Relevant Federal Aid Projects Prior to the City of Idaho Falls:

Babcock Services, Inc. *Office Administrator*

Subcontractor to CHN working transition on the Advanced Mixed Waste Treatment Plant at the Idaho National Lab. Assisted in locating professionals for DOE contractors RFP, negotiate terms of employment and reply with complete proposals. Coordinate new hire pre-employment screening and paper work.

CH2M Hill and Subsidiaries, *Project Assistant*

Provided document controls and project accounting. Coordinate logistic efforts for transition on the INL, ICP contract. Develop and maintain a small business data base to determine work relationships for business opportunities. Support area projects in safe, effective cleanup. Supply important internal communications to more than 2400 employees and subcontractors daily. Research, interview, and write articles for the company newsletters. Coordinate release of news to external media in Idaho, DOE Idaho, and DOE-HQ in Washington, DC.

Education

One year college

Professional Certifications

WAQTC # 20018

- Inspector Qualifications – C.&S., C. A., T. C. I.
- WAQTC – ACI-CFT, AgTT

Work History

Worked from fall of 1992 to 2000 inspecting road and bridge projects for the Idaho Transportation Dept. Joined the City of Idaho Falls in 2000 and have designed and inspected several projects for the City which have included Federal Aid projects.

Mr. Robert Cox joined the City of Idaho Falls in 2000 and aids in the design and Construction of City local federal aid projects. He works as an Inspector/Right-of-way Agent with the City. His prior experience includes 7.5 years at the Idaho Transportation Department (ITD) where he was charged with inspecting road projects as a Principal Inspector.

Relevant Federal Aid Projects Supported with Idaho Falls:

- 12472 Pancheri Bridge over the East Lateral Canal (2013/2014)
- 13133 ADA Pedestrian Ramps & Copncrete Improvements Citywide (2014)
- 11686 Pancheri Rd.; Bellin Rd to Skyline (2014/2015)
- Key #7979 Sunnyside Rd.

Relevant Federal Aid Projects Prior to the City of Idaho Falls:

- Several Interstate and State Highway projects

Yvona Gunderson

Yvona Gunderson joined the City of Idaho Falls in 1990 and aids in the design and construction of City local Federal Aid projects. She works as a Design Technician Supervisor in the Engineering Department.

Relevant Federal Aid Projects Supported with Idaho Falls:

- 12472 Pancheri Bridge over the East Lateral Canal (2013/2014)
- 13133 ADA Pedestrian Ramps & Concrete Improvements Citywide (2014)
- 11686 Pancheri Rd.; Bellin Rd to Skyline (2014/2015)
- 12473 17th Street Rehabilitation Pancheri Bridge to Holmes Ave
- 14052 1st St & Holmes Av Traffic Signal Reconstruction

Kenneth Baldwin Roberts, PLS

Professional Registrations

Idaho Licensed Land Surveyor
PLS 9755

Education

AAS Civil Engineering Tech

Work History

- 2001-Current City of Idaho Falls
- 2000-2001 A&E Engineering
- 1998-2000 Snake River Land Surveying-Rocky Mountain Engineering
- 1996-1998 Gordon Sorensen Engineering
- 1993-1996 JUB Engineering
- 1992 USFS Caribou National Forest Survey

Mr. Kenneth Roberts joined the City of Idaho Falls in 2001 and aids in the design and Construction of City local federal aid projects. He works as the City Surveyor within the City. Prior to that he worked as a consultant for 9 years from 1992 to 2001 as a Survey Crew Chief. His prior experience includes Surveying and Mapping, Property Boundary, Road and Bridge Staking, Industrial Surveying, and Disaster Road Reconstruction.

Relevant Federal Aid Projects Supported with Idaho Falls:

- 14052 - 1st St & Holmes Av Traffic Signal Reconstruction (Current)
- 13585 - 17th Street Rehabilitation Holmes Ave to Austin Ave
- 13132 Grandview Drive Reconstruction Skyline Dr. to Saturn Ave.
- 12472 Pancheri Bridge over the East Lateral Canal (2013/2014)
- 12473 - 17th Street Rehabilitation Pancheri Bridge to Holmes Ave
- 11686 Pancheri Rd.; Bellin Rd to Skyline (2014/2015)2001-Current
- 09616 Old Butte Rd. at US 20
- 7979 Sunnyside Road Construction 2007
- 7708 Hitt Road and Sunnyside Construction 2005
- Greenbelt Path - Pancheri Dr. to So. Tourist Park
- University Place Pathway - Freeman Park to UPRR Bridge

Relevant Federal Aid Projects Prior to the City of Idaho Falls:

- Interstate 15 from Exit 69 to Exit 71 widening. (1999+/-)
- Interstate 84 at Milepost 124 (1993+/-)

Neal Cunningham

Education

High School/some Tech collage

Work History

Mountain River inc. 1999-2011

Skidmore inc. 1995-1999

Mr. Neal Cunningham joined the City of Idaho Falls in May 2011 and aids in the design and Construction of City local federal aid projects. He works as a Survey Tech with the City. Prior to that he worked as a construction surveyor for10 years from in 1999 to 2011 surveying administering Federal Aid projects

Relevant Federal Aid Projects Supported with Idaho Falls:

- 12472 Pancheri Bridge over the East Lateral Canal (2013/2014)
- 13133 ADA Pedestrian Ramps & Concrete Improvements Citywide (2014)
- 11686 Pancheri Rd.; Bellin Rd to Skyline (2014/2015)

Brandon Mecham

Education

High School Grad/Some Tech College

Work History

- 2013-Current City of Idaho Falls Survey Tech
- 2008-2013 INL/Sub Contracted Surveyor
- 2005-2008 Schiess and Associates

Mr. Brandon Mecham joined the City of Idaho Falls in March 2013 and aids in the design and Construction of City local federal aid projects. He works as a Survey Tech with the City. Prior to that he worked as a construction surveyor for 8 years from 2005 to 2013.

Relevant Federal Aid Projects Supported with Idaho Falls:

- 12472 Pancheri Bridge over the East Lateral Canal (2013/2014)
- 13133 ADA Pedestrian Ramps & Copncrete Improvements Citywide (2014)
- 11686 Pancheri Rd.; Bellin Rd to Skyline (2014/2015)

Relevant Federal Aid Projects Prior to the City of Idaho Falls:

- INL Waste Treatment Plant. Instrument Man
- INL, 10 mile Road to connect MFC to INTEC. Crew Chief

Roger Schmitt

Key Responsibilities

Quality Control / Assurance

Project Design

Construction Support

Education

AAS – Computer-Aided Drafting Technology, 1999

Employment History

City of Idaho Falls, 2015-Present

Cude Engineers, 2006-2015 (Texas)

Mr. Schmitt graduated with an A.A.S. degree in 1999 and has worked in the Civil Engineering field ever since. He joined the City of Idaho Falls in 2015 with sixteen years of civil drafting and design experience. Working as a Designer with the City, Mr. Schmitt aids in the design and construction support of City local federal aid projects.

Relevant Federal Aid Projects Supported prior to City of Idaho Falls:

- ADA Improvements at 30 Northside Independent School District Elementary School Playgrounds (2010)
- ADA Improvements at 15 Northside Independent School District Elementary School Playgrounds (2011)

Relevant Federal Aid Projects Supported with City if Idaho Falls:

- 18995 12th Street Bridge over Idaho Canal
- 20304 Elva to Holmes and to North Tourist Park
- 20473 Lindsay Blvd. Railroad Crossing Improvements
- 27269 ADA and Sidewalk Improvements Citywide

Walker Grote

Key Responsibilities

- Multiple Field Survey Responsibilities
- Plat and Easement Reviews, Annexations

Work Location

- Idaho Falls, ID

Employment History

•Ellsworth & Associates PLLC 07/2007-03/2019

•City of Idaho Falls 03/2019-Current

Walker has served the City in the capacity of Survey Technician since March 2019. Walker was the field crew chief for Ellsworth & Associates, PLLC from July 2007 to March 2019.

His responsibilities with the City of Idaho Falls include multiple duties on the field crew such as running the GPS, running the Robotic Total Station, setting stakes etcetera. He also has office duties such as plat reviews, easement reviews as well as Annexation Ordinance drafting and writing legal descriptions for the annexations.

Relevant Projects Supported:

- 17th Street and Woodruff Right-of-Way
- Idaho Falls North Power Loop (Private Sector)
- Rigby High School (Private Sector)
- Record of Survey for ITD, Humphries, Idaho(PS)
- Multiple monument checks for new Intermountain Gas Company gas lines (Private Sector)
- Countless Lot Surveys and Section Breakdowns (PS)
- Multiple ALTA Surveys (Private Sector)

Forrest Ward

Key Responsibilities

- Survey Layout
- Preconstruction TOPO & Construction Support / Staking

Work Location

- Idaho Falls, ID

Employment History

- Eagle Rock Engineering
  2010-2015
- City of Idaho Falls
  2015-Present

Forrest started surveying in 2001. He has worked on a wide range of projects. Anything from Boundary and ALTA Surveys, to construction projects ranging from Subdivisions, Street reconstruct, to Western Federal Lands Projects at Craters of the Moon.

His responsibilities include creating survey layout, supervising survey crew, laying out engineered design in the field; performing plan reviews.

Relevant Projects Supported:

- Elm Street Roundabout
- 25th East & 17th Intersection
- East Green Belt Bike Path
- 1st Street water line & road reconstruct
- Gem State - Yearly report on the South Power Plant/Dam

Bill McKellip

Key Responsibilities

- Design & Drafting (PE reviewed & approved)

Work Location

- Idaho Falls, ID

Employment History

- 12/2017 - present
  City of Idaho Falls
  - Idaho Falls, ID
- 1/2006 – 12/2017
  Kinross – Round Mountain
  - Round Mountain, NV
- 5/2002 – 1/2006
  Special Operations Center, HWAD
  - Hawthorne, NV

Education

BA – Visual Arts - 2002
University of Jamestown

- Cum Laude

Certifications

- AutoCAD 2012 Professional
- AutoCAD 2013 Professional

Bill McKellip has served the City in the capacity of Design Technician since 2017. Josh has supported design and drafting efforts on a few projects including ITD, LHTAC and municipal work. Bill has 17 years design and drafting experience.

His responsibilities include designs for streets, water, sanitary sewer, storm drainage systems, parking lots, minor structures, and minor architectural designs in street right-of-ways. Details design projects and plans to include curve design for speed control, vertical sight distance for safety, and horizontal design for drainage; plots cross-sections for quantity figuring and symmetry between curbs and gutters and sidewalk, etc., to satisfy local, state, or federal standards. Establishes line and grade for Public Works projects; makes records of completed project location and direction for official records. Responds to community questions concerning Public Works utilities and other infrastructure mapping. Assists in preparation and presentation of economic and feasibility studies and reports. Prepares drawings, maps, and other records pertaining to field surveys, inspections, and traffic studies; solves geometric and trigonometric problems necessary for accurate completion of drawings. Assists in other Public Works projects and activities, including snow removal, as needed and various admin tasks.

Relevant Federal Aid Projects Supported with City if Idaho Falls:

- 20067 - Signal Head Visibility Improvements, Idaho Falls
- 20499 - Thermoplastic & ADA Improvements, Idaho Falls
- 13586 - Idaho Falls Microsurfacing
- 20834 – Mobility Enhancements for Elderly & Disabled, Idaho Falls

Cristy Wilkins

Education

BA – Design - California State University, Sacramento.

Cristy Wilkins joined the City of Idaho Falls in 2015 and aids in the design and Construction of City local federal aid projects. She works as a Designer with the City.

Relevant experience prior to Idaho Falls:

- 22 years ACAD drafting.
- 10 years Administrative paperwork for city, county, and federal aid projects.

Relevant Federal Aid Projects Supported with Idaho Falls:

- 18811 South Boulevard Corridor RRFB Light, Idaho Falls (2015)

Brian Cunningham

Key Responsibilities

- Design & Inspection
- Technical Reviews and Construction Support

Employment History

• Mountain River Engineering 1195 to 2012.
• HK Contractors 2012 to 2017.
)

Brian has served the City in the capacity of Construction Observer since 2017. Brian reviews all site plan and improvement drawings to verify design meets City standards and specifications. Inspects new subdivision QC/QA and that construction is built to the standards and specifications.

His responsibilities include working with the local engineering firms as they submit new subdivisions for approval in the City.

Brian has worked in the private sector overseeing design and construction of residential and commercial subdivisions throughout Bonneville, Bingham, Jefferson & Madison counties..

Brian worked as a lead estimator for a contractor for 6 years. He estimated construction costs for local, residential & commercial utilities and roadways and private projects in National Parks.

Relevant Federal Aid Projects Supported with City if Idaho Falls:

- Federal Aid Project Project 20499 Thermoplastic & ADA Improvemens
- Federal Aid Project 14049 ADA & Sidewalk Improvements

EXHIBIT B

(22005) 17th & Rollandet Improvements
Construction Engineering & Inspection
10/29/2019

Exhibit B

LABOR DAY ESTIMATE SUMMARY

	SUMMARY	Total L-Hours	Proj Manager L-Hours	Chief Inspector L-Hours	Tech L-Hours	Office M. L-Hours	Survey L-Hours
1	City-Labor Hours	548.00	100.00	95.00	291.00	50.00	12.00

SALARY COSTS

A. Summary of Man-Day Costs

					Fully Loaded Hourly Rate		
1	Project Manager	100.00	L-Hours X	$54.10	$114.15	/hour =	$ 11,415.10
2	Chief Inspector	95.00	L-Hours X	$37.65	$79.44	/hour =	$ 7,546.94
3	Trans Technician	291.00	L-Hours X	$32.82	$69.26	/hour =	$ 20,153.85
4	Office Manager	50.00	L-Hours X	$20.60	$43.47	/hour =	$ 2,173.30
5	Survey *	12.00	L-Hours X	$55.25	$116.58	/hour =	$ 1,398.93

TOTAL DIRECT PAYROLL $ 42,688.13

B. Payroll Burden & Fringe Benefit Costs

1	ITD Office OH Rate	1.1100	2.1100	

TOTAL PAYROLL, BURDEN, FRINGE & FEE $ 42,688.13

C. Out-of-Pocket Costs - (See detail sheet)

1	City Direct Expenses		$ 1,708.800	=	$ 1,708.80

TOTAL ESTIMATED FEE $ 44,396.93

* Survey requires a 2-man crew.

EXHIBIT B

Idaho Falls

1	CONSTRUCTION ADMINISTRATION	Total L-Hours	PM L-Hours	CI L-Hours	Tech L-Hours	Office M. L-Hours	Survey L-Hours
1.1	General Contract Administration	-					
1.1	Submittal Log & Min. Testing Requirements	1.00	1.00				
1.2	Pre-Construction Conference	3.00	1.00	1.00	1.00		
1.3	Labor Compliance	18.00	2.00		8.00	8.00	
1.4	Civil Rights Compliance	8.00			4.00	4.00	
1.5	Filing & Records Verification	8.00				8.00	
1.6	Progress Estimates	8.00	4.00			4.00	
1.7	Materials Certifications	20.00	8.00	8.00		4.00	
1.7.1	MTR	8.00	4.00	4.00			
1.7.2	Source Approvals	-					
1.7.3	Mix Design Reviews	2.00	2.00				
1.8	Contract Changes	2.00	2.00				
1.9	Weekly Progress Meetings	12.00	4.00	4.00		4.00	
1.10	Payroll Submittals	6.00	2.00			4.00	
1.11	Change Orders	4.00	2.00			2.00	
1.12	Submittal Reviews	32.00	16.00	16.00			
1.13	Claims	-	0.00	0.00			
1	TOTAL FOR CONTRACT ADMIN.	132.00	48.00	33.00	13.00	38.00	-

2	Survey Control	Total L-Hours	PM L-Hours	CI L-Hours	Tech L-Hours	Office M. L-Hours	Survey* L-Hours
2	Survey Verification	18.00	2.00	4.00			12.00
2	TOTAL FOR SURVEY CONTROL	18.00	2.00	4.00	-	-	12.00

EXHIBIT B Idaho Falls

3	PROJECT INSPECTION	Total L-Hours	PM L-Hours	CI L-Hours	Tech L-Hours	Office M. L-Hours	Survey* Crew-Hrs
3.1	On Site Inspection/Diaries	296.00	24.00	32.00	240.00		
3.2	Deficiency reporting & Recommendations	4.00	2.00	2.00			
3.3	Pay Documents	64.00	16.00	16.00	32.00		
3.4	Environmental and Erosion Control Monitoring	-	0.00	0.00			
3	TOTAL FOR PROJECT INSPECTION	364.00	42.00	50.00	272.00	-	-

EXHIBIT B

4	PROJECT CLOSE OUT	Total L-Hours	PM L-Hours	CI L-Hours	Tech L-Hours	Office M. L-Hours	Survey* Crew-Hrs
4.1	Document Review	5.00				5.00	
4.2	Final Payment Certifications	4.00				4.00	
4.3	Substantial Completion Inspection	14.00	3.00	4.00	6.00	1.00	
4.4	Final Inspection	7.00	3.00	4.00			
4	TOTAL FOR PROJECT CLOSEOUT	30.00	6.00	8.00	6.00	10.00	-

5	Monthly Invoices	Total L-Hours	PM L-Hours	CI L-Hours	Tech L-Hours	Office M. L-Hours	Survey* Crew-Hrs
5	Monthly Invoices	4.00	2.00			2.00	
	Total	**548.00**	**100.00**	**95.00**	**291.00**	**50.00**	**12.00**

EXHIBIT B

(22005) 17th & Rollandet Improvements
Construction Engineering & Inspection

10/29/2019

Wages	PM	CI	Tech	Office Man	Survey
Chris Canfield	54.10				
Kenny Roberts					40.57
Walker Grote					20.86
Forest Ward					25.1
Neal Cunnnigham			30.98		
Brandon Mecham					23.97
Gary Olson		37.65			
Michael Carlile			30.98		
Robert Cox			36.51		
Tami Nichols				20.60	
Average	54.10	37.65	32.82	20.60	55.25

EXHIBIT B

(22005) 17th & Rollandet Improvements
Construction Engineering & Inspection

DIRECT EXPENSES

	Total			
Number of Trips (engr 1 x per week)	12	Trips		
Average Miles per Trip (engr)	5	Mi	60	Mi
Number of Trips (observer)	60			
Average miles per trip (observer)	5		300	Mi
Total Miles			360	
Cost per Mile	$ 0.5800	/Mi		
Total Mileage Cost*			$ 208.80	
Testing (Compaction)			$1,500.00	
Total Direct Cost			$1,708.80	

IDAHO FALLS

MEMORANDUM

FROM: Chris H Fredericksen, Public Works Director

DATE: Monday, February 3, 2020

RE: Approval of State/Local Agreement with Idaho Transportation Department for the Path Connection Plan on Short Street

Council Action Desired

☐ Ordinance ☐ Resolution ☐ Public Hearing

☒ Other Action (Approval, Authorization, Ratification, etc)

Approval of an Agreement and Resolution and authorization for Mayor and City Clerk to sign both documents (or take other action deemed appropriate).

Description, Background Information & Purpose

Attached for your consideration is a State/Local Agreement and Resolution with the Idaho Transportation Department (ITD) for development of the Path Connection Plan. This project will provide a sidewalk along S Yellowstone Avenue between N 15th Street and Cliff Street and also along the east side of Capital Avenue from Pancheri Drive to Short Street.

Relevant PBB Results & Department Strategic Plan

☐ ☐ ☐ ☐ ☒ ☒ ☐ ☐

This agreement supports the community-oriented results of improved livability and enhanced safety by adding and upgrading sidewalks along city streets.

Interdepartmental Coordination

Project reviews will be conducted with all necessary city departments to ensure coordination of project activities.

Fiscal Impact

The total estimated cost of the project is $389,000.00. This agreement requires city financial contribution toward the project with a match rate of 7.34% for an estimated total of $28,553.00. The city match will be in the form of in-kind project development, construction management, and inspection services. A $2,000.00 initial deposit by the city is required to begin the project.

Legal Review

The Agreement has been reviewed by the City Attorney.

2-37-24-4-STR-2018-22
2020-10

STATE/LOCAL AGREEMENT
(PROJECT DEVELOPMENT)

PROJECT NO. A022(006)
PATH CONNECTION PLAN
CITY OF IDAHO FALLS
BONNEVILLE COUNTY
KEY NO. 22006

PARTIES

THIS AGREEMENT is made and entered into this _____ day of _____, _____, by and between the IDAHO TRANSPORTATION BOARD, by and through the IDAHO TRANSPORTATION DEPARTMENT, hereafter called the State, and the CITY OF IDAHO FALLS, acting by and through its Mayor and Council, hereafter called the Sponsor.

PURPOSE

The Sponsor has requested that the State include in its Idaho Transportation Investment Program the Local Highway Safety Improvement Program (LHSIP) Project with Key No. 22006, described as Path Connection Plan. Project development is to be performed by Consultant Engineers. The purpose of this Agreement is to set out the terms and conditions to accomplish the project development phase of this project.

NOTE: Securing the services of a consultant for project development services must follow the process outlined in the Idaho Transportation Department Guidelines for Local Public Agency Projects.

Since certain functions under this Agreement are to be performed by the State, requiring the expenditure of funds, and since the State can only pay for work associated with the State Highway System, the Sponsor is fully responsible for all costs incurred by the State related to the project.

Authority for this Agreement is established by Section 40-317 of the Idaho Code.

The Parties agree as follows:

SECTION I. GENERAL

1. It is necessary to develop construction plans and specifications in order that federal participation may be obtained in the construction costs of the project. Federal-aid for project development and right of way is available on this project.

2. Federal participation in the project is at the rate of 92.66%; local participation is 7.34%. Scheduled funding for this project is listed in the approved Idaho Transportation Investment Program, and subsequent revisions. Current ***estimated*** funding is as follows:

   a. Project Development - $59,000
   - (PE-$2,000, PL-$15,000, PC-$42,000)

   b. Right-of-Way - $0

   c. Utilities - $0

   d. Construction Engineering - $55,000
   - (CE-$1,000, CL-$12,000, CC-$28,000 & Cont.-$14,000)

   e. Construction - $275,000

   f. Total Estimated Project Costs - $389,000

3. The Sponsor's match for this project will be provided in the form of In-Kind services as itemized fully in the attached Exhibit A, (form ITD-2394, Request for Approval of In-Kind Work).

4. Funds owed by the Sponsor shall be remitted to the State through the ITD payment portal at: *https://apps.itd.idaho.gov/PayITD* .

5. This project shall be designed to State Standards as defined in the current version of the Idaho Transportation Department's Design Manual, or as subsequently revised. The current version of the Design Manual can be viewed at the following web site: http://itd.idaho.gov/manuals/ManualsOnline.htm.

6. All information, regulatory and warning signs, pavement or other markings, and traffic signals required and warranted will be developed as a part of the plans, regardless of whether the work is done as a portion of the contract or by the Sponsor's forces.

7. If the project is terminated by the Sponsor prior to completion, the Sponsor shall repay to the State all federal funds received for the project, and shall be liable to the State for any un-reimbursed incidental expenses as provided for in Section II, Paragraph 1 of this Agreement.

8. Sufficient Appropriation. It is understood and agreed that the State and the Sponsor are governmental agencies, and this Agreement shall in no way be construed so as to bind or obligate the State or the Sponsor beyond the term of any particular appropriation of funds by the Federal Government or the State Legislature as may exist from time to time. The State and the Sponsor reserve the right to terminate this Agreement if, in its sole judgment, the Federal Government or the legislature of the State of Idaho fails, neglects or refuses to appropriate sufficient funds as may be required for the State to continue payments. Any such termination shall take effect immediately upon notice and be otherwise effective as provided in this Agreement.

SECTION II. That the State shall:

1. Provide the following services incidental to the project development:

   a. Assist Sponsor in the selection of a Consulting Engineer and negotiations as needed, and furnish the Agreement for Engineering Services and any supplements thereto, to be used between the Sponsor and Consultant Engineers on this project.

   b. Review Preliminary Environmental Evaluation and recommend other appropriate environmental documentation.

   c. Furnish to the engineers copies of materials test reports and other data applying to the project and available to the State.

   d. Provide a hearing officer to conduct a formal public hearing as necessary.

e. File with the Federal Highway Administration applications for exceptions to AASHTO Standards when appropriate.

f. If requested by the Sponsor, assist in negotiations with public carriers and utilities for agreements on behalf of the Sponsor.

g. Review the Consultant plans, estimates, reports and environmental studies, and issue notice of approval.

h. Supply roadway summary sheets and such standard drawings as may be required to supplement the plans.

i. Print and assemble plans, special provisions, specifications and contracts.

j. Advertise for bids and let the construction contract. Prior to construction, the parties will enter into a separate agreement covering responsibilities of the parties relating to construction.

2. Within sixty (60) days of receipt of appropriate documentation from the Sponsor showing expenditure of funds for project development, reimburse the Sponsor for eligible expenses at the approved Federal-aid rate.

3. Bill the Sponsor for costs incurred by the State under this Agreement for project development, if those costs exceed the amount set out in Section III, Paragraph 1.

4. Bill the Sponsor for any federal funds to be repaid by the Sponsor if the project is terminated by the Sponsor prior to completion, and the Sponsor has been reimbursed with federal funds for preliminary engineering and/or right-of-way acquisition.

5. Appoint the Local Highway Technical Assistance Council as the contract administrator for the State.

SECTION III. That the Sponsor shall:

1. Pay to the State, before the State begins the incidental services referred to in Section II, Paragraph 1, the sum of **TWO THOUSAND DOLLARS ($2,000)**, estimated to be the total expense to the State. In addition, pay to the State the cost of all incidental services provided by the State upon receipt of the billing provided for in Section II, Paragraph 3. These funds will be credited towards the Sponsor's match on the project.

2. Sponsor warrants that it will repay any federal reimbursements on this project if the project is terminated by the Sponsor prior to completion.

3. With the assistance of the State, hire a consultant for development of the project.

4. Make timely payment of all consultant invoices throughout the design of the project. Periodically the Sponsor may submit allowable Consultant invoices and receipts to the State showing payment of same. The State will reimburse the Sponsor for eligible expenses less the Sponsor's match.

5. Advertise for and hold a formal public hearing if required in accordance with the Idaho Open Meetings Law.

6. If requested by a utility company, hold hearings before the City Council or Board of Commissioners. The Sponsor will issue orders to the utilities.

7. Right of Way

   a. Acquire all rights-of-way and easements needed to provide for construction and maintenance of the project.

   b. Employ an approved certified general appraiser to complete all appraisals and an independent certified general appraiser to review appraisals required for the project unless the property value meets the requirements in Idaho Code Section 54-4105(5) and 49 CFR 24.102.

c. Review the appraisal reviewer's statement of the estimated fair market value and approve an amount to be just compensation for each parcel to be acquired.

d. Provide a monthly right-of-way status report (ITD-2161), and forward it to the project manager.

e. Before initiating negotiations for any real property required for right-of-way, establish, in writing, an amount considered to be just compensation, under Idaho law, Federal Regulations or any other applicable law, and make a prompt offer to acquire the property for the full amount established.

f. Make a good faith effort, in accordance with Real Property Acquisition Policies Act of 1970, to acquire the real property by negotiation. Employ a State Approved Negotiator if necessary.

g. Inform the property owner, in those cases where he indicates a willingness to donate a portion of his real property for rights-of-way, of all his rights including his right to full compensation in money for land and damages, if any, in accordance with Idaho Code.

h. Provide relocation assistance and payments for any displaced person, business, farm operation, or nonprofit organization in accordance with the Uniform Relocation Assistance and Real Property Acquisition Policies Act of 1970; 49 CFR 24; 23 CFR 710; the Idaho Real Property Acquisition Act of 1971; Title 40, Chapter 20; and Title 58, Chapter 11; Idaho Code, as amended, and regulations promulgated thereunder. No individual or family shall be displaced until decent, safe and sanitary replacement housing is available to the relocatees for immediate occupancy. In addition, advise the State of any relocations required by the project and upon request of the State, authorize the State to negotiate on the Sponsor's behalf for all relocation assistance and payments, the cost of which will be assumed by the Sponsor at the time of negotiation.

i. Ensure to the greatest extent practicable that no person lawfully occupying the real property shall be required to move from his home, farm or business without at least ninety (90) days written notice prior to advertisement of the project.

8. Before advertisement for bids, provide a certification that all rights-of-way, easements, permits, materials sources and agreements necessary for the construction of the project have been acquired in accordance with the provisions of this Section. Provide a value of any right-of-way donations obtained, which may be credited as a matching share.

9. Evaluate the impact the project might have on the quality of the human environment and prepare and furnish to the State an environmental evaluation that includes cultural resources and any other documentation required by the National Environmental Policy Act.

10. At all required public hearings, furnish all necessary exhibits and provide for a representative of the Sponsor to describe the project; present information about the location and design, including alternates; discuss the tentative schedules for rights-of-way acquisitions and construction; discuss the Sponsor's relocation assistance program; discuss the economic, sociological, and environmental effects of the project; and answer all questions concerning the project.

11. Comply with Attachment 1 attached hereto and made a part hereof. By this agreement Sponsor agrees to comply with and be bound to the Civil Rights provisions of Title VI of the Federal Code and to generally insert those provisions in all contracts that it enters into that are federally funded on this project. If property acquired for this project with Federal financial assistance is transferred, the recipient of the property will be subject to Attachment 1 if the property is used for the same purpose it was originally acquired or for another purpose involving similar services or benefits to the general public. Sponsor should contact the State prior to disposing of any property acquired under this agreement.

12. Maintain all project records, including source documentation for all expenditures and in-kind contributions, for a period of three (3) years from the date of final acceptance. If any litigation, claim, negotiation, or audit has been started before expiration of the three-year period, the records shall be retained until completion of the action and resolution of all issues that arise from it.

13. Comply with all other applicable State and Federal regulations.

EXECUTION

This Agreement is executed for the State by its Highways Construction & Operations Division Administrator, and executed for the Sponsor by the Mayor, attested to by the City Clerk, with the imprinted Corporate Seal of the City of Idaho Falls.

IDAHO TRANSPORTATION DEPARTMENT

_____
Division Administrator
Highways Construction & Operations

ATTEST:

_____
Clerk

(SEAL)

CITY OF IDAHO FALLS

_____
Mayor

By regular/special meeting
on _____.

hm:22006 SLAPD.docx

RESOLUTION

WHEREAS, the Idaho Transportation Department, hereafter called the **STATE,** has submitted an Agreement stating obligations of the **STATE** and the **CITY OF IDAHO FALLS,** hereafter called the **CITY,** for development of a Path Connection Plan; and

WHEREAS, the **STATE** is responsible for obtaining compliance with laws, standards and procedural policies in the development, construction and maintenance of improvements made to the Federal-aid Highway System when there is federal participation in the costs; and

WHEREAS, certain functions to be performed by the **STATE** involve the expenditure of funds as set forth in the Agreement; and

WHEREAS, The **STATE** can only pay for work associated with the State Highway system; and

WHEREAS, the **CITY** is fully responsible for its share of project costs; and

NOW, THEREFORE, BE IT RESOLVED:

1. That the Agreement for Federal Aid Highway Project A022(006) is hereby approved.

2. That the Mayor and the City Clerk are hereby authorized to execute the Agreement on behalf of the **CITY.**

3. That duly certified copies of the Resolution shall be furnished to the Idaho Transportation Department.

CERTIFICATION

I hereby certify that the above is a true copy of a Resolution passed at a *regular, duly* called special (X-out non-applicable term) meeting of the City Council, City of Idaho Falls, held on _____, _____.

(Seal)

_____
City Clerk

ATTACHMENT 1

1050.20 Appendix A:

During the performance of work covered by this Agreement, the Consultant for themselves, their assignees and successors in interest agree as follows:

1. **Compliance With Regulations**. The Consultant shall comply with all regulations of the United States Department of Transportation relative to Civil Rights, with specific reference to Title 49 CFR Part 21, Title VI of the Civil Rights Act of 1964 as amended, and Title 23 CFR Part 230 as stated in the ITD EEO Special Provisions and Title 49 CFR Part 26 as stated in the appropriate ITD DBE Special Provisions. http://apps.itd.idaho.gov/apps/ocr/index.aspx

2. **Nondiscrimination**. The Consultant, with regard to the work performed by them during the term of this Agreement, shall not in any way discriminate against any employee or applicant for employment; subcontractor or solicitations for subcontract including procurement of materials and equipment; or any other individual or firm providing or proposing services based on race, color, sex, national origin, age, disability, limited English proficiency or economic status.

3. **Solicitations for Subcontracts, Including Procurement of Materials and Equipment.** In all solicitations, either by bidding or negotiation, made by the Consultant for work or services performed under subcontract, including procurement of materials and equipment, each potential subcontractor or supplier shall be made aware by the Consultant of the obligations of this Agreement and to the Civil Rights requirements based on race, color, sex, national origin, age, disability, limited English proficiency or economic status.

4. **Information and Reports.** The Consultant shall provide all information and reports required by regulations and/or directives and sources of information, and their facilities as may be determined by the State or the appropriate Federal Agency. The Consultant will be required to retain all records for a period of three (3) years after the final payment is made under the Agreement.

5. **Sanctions for Noncompliance.** In the event the Consultant or a Subconsultant is in noncompliance with the EEO Special Provisions, the State shall impose such sanctions as it or the appropriate Federal Agency may determine to be appropriate, including, but not limited to:

   - Withholding of payments to the Consultant until they have achieved compliance;
   - Suspension of the agreement, in whole or in part, until the Consultant or Subconsultant is found to be in compliance, with no progress payment being made during this time and no time extension made;
   - Cancellation, termination or suspension of the Agreement, in whole or in part;
   - Assess against the Consultant's final payment on this Agreement or any progress payments on current or future Idaho Federal-aid Projects an administrative remedy by reducing the final payment or future progress payments in an amount equal to 10% of this agreement or $7,700, whichever is less.

6. **Incorporation of Provisions.** The Consultant will include the provisions of paragraphs 1 through 5 above in every subcontract of $10,000 or more, to include procurement of materials and leases of equipment unless exempt by the Acts, the Regulations, and directives pursuant thereto. The Consultant shall take such action with respect to any subcontract or procurement as the State or the appropriate Federal Agency may direct as a means of enforcing such provisions, including sanctions for noncompliance. Provided, that if the Consultant becomes involved in, or is threatened with, litigation with a subcontractor or supplier as a result of such direction, the Consultant may request the State to enter into any litigation to protect the interest of the State. In addition, the Consultant may request the United States to enter into the litigation to protect the interests of the United States.

1050.20 Appendix E

During the performance of this contract, the Consultant, for itself, its assignees, and successors in interest (hereinafter referred to as the "contractor") agrees to comply with all non- discrimination statutes and authorities; including but not limited to:

Pertinent Non-Discrimination Authorities:

- Title VI of the Civil Rights Act of 1964 (42 U.S.C. § 2000d et seq., 78 stat. 252), (prohibits discrimination on the basis of race, color, national origin); and 49 CFR Part 21.
- The Uniform Relocation Assistance and Real Property Acquisition Policies Act of 1970, (42 U.S.C. § 4601), (prohibits unfair treatment of persons displaced or whose property has been acquired because of Federal or Federal-aid programs and projects);
- Federal-Aid Highway Act of 1973, (23 U.S.C. § 324 et seq.), (prohibits discrimination on the basis of sex);
- Section 504 of the Rehabilitation Act of 1973, (29 U.S.C. § 794 et seq.), as amended, (prohibits discrimination on the basis of disability); and 49 CFR Part 27;
- The Age Discrimination Act of 1975, as amended, (42 U.S.C. § 6101 et seq.), (prohibits discrimination on the basis of age);
- Airport and Airway Improvement Act of 1982, (49 USC § 4 71, Section 4 7123), as amended, (prohibits discrimination based on race, creed, color, national origin, or sex);
- The Civil Rights Restoration Act of 1987, (PL 100-209), (Broadened the scope, coverage and applicability of Title VI of the Civil Rights Act of 1964, The Age Discrimination Act of 1975 and Section 504 of the Rehabilitation Act of 1973, by expanding the definition of the terms "programs or activities" to include all of the programs or activities of the Federal-aid recipients, sub-recipients and contractors, whether such programs or activities are Federally funded or not);
- Titles II and III of the Americans with Disabilities Act, which prohibit discrimination on the basis of disability in the operation of public entities, public and private transportation systems, places of public accommodation, and certain testing entities (42 U.S.C. §§ 12131-12189) as implemented by Department of Transportation regulations at 49 C.F.R. parts 37 and 38;
- The Federal Aviation Administration's Non-discrimination statute (49 U.S.C. § 47123) (prohibits discrimination on the basis of race, color, national origin, and sex);
- Executive Order 12898, Federal Actions to Address Environmental Justice in Minority Populations and Low-Income Populations, which ensures discrimination against minority populations by discouraging programs, policies, and activities with disproportionately high and adverse human health or environmental effects on minority and low-income populations;
- Executive Order 13166, Improving Access to Services for Persons with Limited English Proficiency, and resulting agency guidance, national origin discrimination includes discrimination because of limited English proficiency (LEP). To ensure compliance with Title VI, you must take reasonable steps to ensure that LEP persons have meaningful access to your programs (70 Fed. Reg. at 74087 to 74100);
- Title IX of the Education Amendments of 1972, as amended, which prohibits you from discriminating because of sex in education programs or activities (20 U .S.C. 1681 et seq).

Implementation Procedures
This agreement shall serve as the Sponsor's Title VI plan pursuant to 23 CFR 200 and 49 CFR 21.

For the purpose of this agreement, "Federal Assistance" shall include:

1. grants and loans of Federal funds,
2. the grant or donation of Federal property and interest in property,
3. the detail of Federal personnel,
4. the sale and lease of, and the permission to use (on other than a casual or transient basis), Federal property or any interest in such property without consideration or at a nominal consideration, or at a consideration which is reduced for the purpose of assisting the Sponsor, or in recognition of the public interest to be served by such sale or lease to the Sponsor, and
5. any Federal agreement, arrangement, or other contract which has as one of its purposes, the provision of assistance.

The Sponsor shall:

1. Issue a policy statement, signed by the Sponsor's authorized representative, which expresses its commitment to the nondiscrimination provisions of Title VI. The policy statement shall be circulated throughout the Sponsor's organization and to the general public. Such information shall be published where appropriate in languages other than English.

2. Take affirmative action to correct any deficiencies found by ITD or the United States Department of Transportation (USDOT) within a reasonable time period, not to exceed 90 days, in order to implement Title VI

compliance in accordance with this agreement. The Sponsor's authorized representative shall be held responsible for implementing Title VI requirements.

3. Designate a Title VI Coordinator who has a responsible position in the organization and easy access to the Sponsor's authorized representative. The Title VI Coordinator shall be responsible for initiating and monitoring Title VI activities and preparing required reports.

4. Adequately implement the civil rights requirements.

5. Process complaints of discrimination consistent with the provisions contained in this agreement. Investigations shall be conducted by civil rights personnel trained in discrimination complaint investigation. Identify each complainant by race, color, national origin, sex, or disability; the nature of the complaint; the date the complaint was filed; the date the investigation was completed; the disposition; the date of the disposition; and other pertinent information. A copy of the complaint, together with a copy of the Sponsor's report of investigation, will be forwarded to ITD's EEO Office – External Programs within 10 days of the date the complaint was received by the Sponsor.

6. Collect statistical data (race and sex) of participants in, and beneficiaries of the Transportation programs and activities conducted by the Sponsor.

7. Conduct Title VI reviews of the Sponsor and sub-recipient contractor/consultant program areas and activities. Revise where applicable, policies, procedures and directives to include Title VI requirements.

8. Attend training programs on Title VI and related statutes conducted by ITD's EEO Office.

9. Participate in an annual review of the Sponsor's Title VI Program, the purpose of which is to determine to what extent the Sponsor has complied with Title VI requirements including the ADA. This review is conducted one year from the date of approval of the Non-Discrimination Agreement and then annually on the same date. The format for the Title VI review will be provided each year to the Sponsor for completion. A determination of compliance will be made by ITD's EEO Office based on the information supplied in the review. This review of the Sponsor's Title VI Program may also include an on-site review in order to determine compliance.

Discrimination Complaint Procedure

Any person who believes that he or she, individually, as a member of any specific class, or in connection with any disadvantaged business enterprise, has been subjected to discrimination prohibited by Title VI of the Civil Rights Act of 1964, the American with Disabilities Act of 1990, Section 504 of the Vocational Rehabilitation Act of 1973 and the Civil Rights Restoration Act of 1987, as amended, may file a complaint with the Sponsor. A complaint may also be filed by a representative on behalf of such a person. All complaints will be referred to the Sponsor's Title VI Coordinator for review and action.

In order to have the complaint consideration under this procedure, the complainant must file the complaint no later than 180 days after:

a) The date of alleged act of discrimination; or
b) Where there has been a continuing course of conduct, the date on which that conduct was discontinued.

In either case, the Sponsor or his/her designee may extend the time for filing or waive the time limit in the interest of justice, specifying in writing the reason for so doing.

Complaints shall be in writing and shall be signed by the complainant and/or the complainant's representative. Complaints shall set forth as fully as possible the facts and circumstances surrounding the claimed discrimination. In the event that a person makes a verbal complaint of discrimination to an officer or employee of the Sponsor, the person shall be interviewed by the Title VI Coordinator. If necessary, the Title VI Coordinator will assist the person in reducing the complaint to writing and submit the written version of the complaint to the person for signature. The complaint shall then be handled according to the Sponsor's investigative procedures.

Within 10 days, the Title VI Coordinator will acknowledge receipt of the allegation, inform the complainant of action taken or proposed action to process the allegation, and advise the complainant of other avenues of redress available, such as ITD and USDOT.

The Sponsor will advise ITD within 10 days of receipt of the allegations. Generally, the following information will be included in every notification to ITD:

a) Name, address, and phone number of the complainant.
b) Name(s) and address(es) of alleged discriminating official(s).
c) Basis of complaint (i.e., race, color, national origin or sex)
d) Date of alleged discriminatory act(s).
e) Date of complaint received by the Sponsor.
f) A statement of the complaint.
g) Other agencies (state, local or Federal) where the complaint has been filed.
h) An explanation of the actions the Sponsor has taken or proposed to resolve the issue raised in the complaint.

Within 60 days, the Title VI Coordinator will conduct an investigation of the allegation and based on the information obtained, will render a recommendation for action in a report of findings to the Sponsor's authorized representative. The complaint should be resolved by informal means whenever possible. Such informal attempts and their results will be summarized in the report of findings.

Within 90 days of receipt of the complaint, the Sponsor's authorized representative will notify the complainant in writing of the final decision reached, including the proposed disposition of the matter. The notification will advise the complainant of his/her appeal rights with ITD, or USDOT, if they are dissatisfied with the final decision rendered by the Sponsor. The Title VI Coordinator will also provide ITD with a copy of this decision and summary of findings upon completion of the investigation.

Contacts for the different Title VI administrative jurisdictions are as follows:

Idaho Transportation Department
Equal Employment Opportunity Office – External Programs
EEO Manager
PO Box 7129
Boise, ID 83707-1129
208-334-8884

Federal Highway Administration
Idaho Division Office
3050 Lakeharbor Lane, Suite 126
Boise, ID 83703
208-334-9180

Sanctions
In the event the Sponsor fails or refuses to comply with the terms of this agreement, the ITD may take any or all of the following actions:

1. Cancel, terminate, or suspend this agreement in whole or in part;
2. Refrain from extending any further assistance to the Sponsor under the program from which the failure or refusal occurred until satisfactory assurance of future compliance has been received from the Sponsor.
3. Take such other action that may be deemed appropriate under the circumstances, until compliance or remedial action has been accomplished by the Sponsor;
4. Refer the case to the Department of Justice for appropriate legal proceedings.

Distribution: EEO Office
Revised: 03-09, 08-10, 08-17

Exhibit A

Request for Approval of In-Kind Work By Local Sponsor on Federal-Aid Projects

ITD 2394 (Rev. 08-14)
itd.idaho.gov

Key Number	Project Number	Project Name
22006	A022(006)	Yellowstone, Short & Capital Pedestrian Access Path Connection

Local Agency Name	
City of Idaho Falls	☒ Engineer Services During Project Development ☒ Construction Engineering and Inspection, Sampling, and Testing

Nature of Work to be Performed by Local Agency
Project Development & Construction Management and Inspection Services

Total Estimated Cost – **Note:** Costs for these services that exceed the match required on the project are not eligible for reimbursement
Up to $65,000 for services (see attached; $27,500 for Project Development and $37,500 for CE & I) anticipated match is understood to be up to $29,600 or 7.34% of the project total, whichever is lower.

List the employees who will be providing services. List employees' qualifications, certifications, and experience for the work to be performed. Attach additional pages if necessary.

Name	Qualifications and Certifications	Experience (If listing specific project experience, indicate if the project was federally funded)	Estimated Cost*
Chris Canfield, P.E.	PE License # 10551 & WAQTC # 20098	7 years at ITD, 8 years as a consultant and 6.5 years at the City administering Federal funded projects (design and construction). See attached	see attached Exhibits A & B
Kent Fugal, P.E.	PE license # WAQTC # 22115	9.5 yrs with Cities & 20 years with consultant working on the design of Federal aid projects.	see attached Exhibits A & B
Kenny Roberts, PLS	PLS licence # 9755	Consultant surveyor for 9 years and then 17 years as City surveyor on federal aid projects. (see attached)	see attached Exhibits A & B
Gary Olson	WAQTC # 43665	Chief Inspector for City 7 years, 10 years inspection as consultant on federal aid projects. See attahced	see attached Exhibits A & B
Robert Cox	WAQTC # 20018	See attached sheets	see attached Exhibits A & B
See attached sheets for additional personnel.	See attached sheets for additional personnel.	See attached sheets for additional personnel.	see attached Exhibits A & B

*Provide separate page with details – see the attached exhibits for examples and for documentation requirements upon completion of work

Reviewed By - Project Manager's Printed Name	Project Manager's Signature	Date
Chris Canfield, P.E.	Chris Canfield	10/29/19

In-Kind Work Approved**	Approval Authority Engineer's Printed Name	Engineer's Signature	Date
☒ Yes ☐ No	Monica Crider	Monica Crider	1/15/2020

**Approval Authority:
Local Projects Administered by LHTAC – Contract Services Engineer

Christopher D. Canfield, PE

Professional Registrations

ID PE #10551

Education

MS, Environmental Engineering
Idaho State University, 1998

BS, Civil Engineering - Emphasis in
Structures and Geotechnics
Idaho State University, 1996

Professional Certifications

ITD Inspector Qualifications

- C. & S. (2001-2012)
- C.A. (2003-2013)
- E. & B. (2002-2012)
- E. Wetlands (2005-2010)
- TCI. (2002-2013)
- S.T. & P.P. (2002-2012)

Work History

Assistant Public Works Director; City of Idaho Falls
May 2013 - PRESENT

Project Engineer
J-U-B ENGINEERS, Inc.
May 2005-present May 2013

EIT/Project Engineer/Traffic Engineer; Idaho Transportation Department 1998- May 2005

Mr. Canfield joined the City of Idaho Falls in May 2013 and aids in the design and Construction of City local federal aid projects. He worked as a consultant for 8 years from in May of 2005 to 2013 manage a Construction Engineering & Inspection Group administering Federal Aid projects across the state. His prior experience includes seven years at the Idaho Transportation Department (ITD) where he was charged with providing engineering support on numerous highway construction projects, as well as managing an Inspection and maintenance crew.

Relevant Federal Aid Projects Supported with Idaho Falls:

- 12472 Pancheri Bridge over the East Lateral Canal (2013/2014)
- 13133 ADA Pedestrian Ramps & Copncrete Improvements Citywide (2014)
- 11686 Pancheri Rd.; Bellin Rd to Skyline (2014/2015)
- 12473 17th St Holmes to Snake River Bridge (2013)

Relevant Federal Aid Projects Prior to the City of Idaho Falls:

See attached sheet.

Project Descriptions	Construction Time Date	Services							Client
		Testing	QC/QA	Inspection	Weekly SWPPP Inspection	Records Inspection	Contract Administration	3rd Party SWPPP Inspection	
36th Street Pedestrian Bridge	July 2010 - April 2011	•	•	•	•	•	•		ITD D-3 Region 1
3700 N; 2000 E. to 2050 E., Filer	Sept 2010 - Oct 2010		•	•			•		LHTAC/ City of Filer
Blacks Creek Rest Area	2007							•	ITD D-3 Region 1
Canyon Creek Bridge, N of Mtn Home	Nov 2010 - April 2011	•		•	•				ITD D-3 Res 2/LHTAC/ MHHD
Conkling Road Overlay	Sept 2010 - Oct 2010		•	•			•		LHTAC
Eckert to Amity Bike Path Extension	Nov 2006-Jun 2007	•	•	•	•	•	•		Ada County
FEMA Silver City Road Reconstruction	2006	•	•	•	•	•	•		Owyhee County
Franklin & 21st Avenue Intersection Stages 1 thru 3	2008-2010	•	•	•	•	•	•		ITD D-3 Res 3; Caldwell
FY 10 ACHD Overlays	June 2010 - Nov 2010		•	•					ITD/ACHD
I-84, Black Cat and Robinson Bridges Reconstruction	2008-2009	•	•	•	•	•	•		ITD D-3 Res 3
I-84, Eagle Exit Ramps	Mar-Nov 2007	•	•	•	•	•	•		ITD D-3 Res 1
I-84, Garrity Interchange to Ten Mile Overpass Median Reconstruction	2008-2009	•	•	•	•	•	•		ITD D-3 Res 3
I-84, Garrity to Ten Mile Reconstruction	2008-2009	•	•	•	•	•	•		ITD D-3 Res 3
I-84, Meridian to Garrity Mill and Widening	2007-2008	•	•	•	•	•	•		ITD D-3 Res 3
I-84, MP 17.6 to Caldwell	2007							•	ITD D-3 Res 2
I-84, Ten Mile Creek Drain Widening	Jan-Apr 2008	•	•	•	•	•	•		ITD D-3 Res 3
I-84, Ten Mile to Meridian Reconstruction	2008-2009	•	•	•			•		ITD D-3 Res 4
I-90, Washington State Line to Sherman Ave., Kootenai Co.	2007-2008			•					ITD D-1
Indian Creek, 11th Avenue and 21st Avenue Bridges	Apr 2008-2009	•	•	•	•	•	•		ITD D-3 Res 3; Caldwell
Kings Corner Railroad Overpass	2005-2006	•	•	•	•	•	•		City of Nampa
Main St.; Boise Ave. to Washington, Emmett	April 2010 - August 2011	•	•	•	•	•	•		ITD D-3/LHTAC/Emmett
O'Gara Road Overlay	September 2010		•	•			•		LHTAC
Pioneer Corridor Ped/Bike Improvement, Boise	Aug 2010 - April 2011	•	•	•	•	•	•		ITD D-3 Res 1/Boise CCDC
SH-21 Warm Springs to Diversion Dam and Federal Way to I-84	Jul-Sep 2009	•		•	•				ITD D-3 Res 1
SH-55 Main Street, Donnelly	2009							•	ITD D-3 Res 4
SH-44, Chinden Boulevard to State Street and Junction SH-55N to Glenwood	Jun-Aug 2009	•		•					ITD D-3 Res 1
SH-55, Marsing to Sunnyslope Cv.	2007							•	ITD D-3 Res 2
STC 2714; Center St., Main to Ash St., Kimberly	May 2010 - Oct 2010		•	•		•	•		ITD D-4/LHTAC/Kimberly
STC 7808, N Middleton Rd; Jct SH-44 to Mill Slough & STC 7807, Int. Cemetary Rd & SH-44, Middleton	Aug. 2010 - Dec. 2010	•	•	•	•	•	•		ITD D-3 Res 3/Middleton
Strike Dam Cutoff Rd, Phases I & III	March 2010 - Sept 2010	•	•	•	•	•	•		ITD D-3 Res 2/LHTAC/MHHD
I-84; Ten Mile I.C.	Sept 2009 - July 2011	•	•	•	•	•	•		ITD D-3 Res 4
U.S. 20, Broadway Avenue, Rossi Street to Ridenbaugh Canal	Aug-Sep 2007	•		•					ITD D-3 Res 1
U.S. 20, Cat Creek Summit	2007							•	ITD D-3 Res 2
U.S. 20, Cloverdale Road to Hewlett-Packard Main Entrance	Mar-Oct 2007	•		•					ITD D-3 Res 1
Meridian WWTP Filters Building	June 2011 - Dec 2011			•	•				City of Meridian
Meridian WWTP Secondary Clarifiers Retrofit	July 2011 - Present			•	•				City of Meridian
Meridian WWTP Grit Classifier	August 2011 - Dec 2011			•	•				City of Meridian
Buhl WWTP	2010-2011		•	•			•		City of Buhl
Filer WWTP	2010-2011		•	•	•		•		City of Filer
Garfield St Bridge, Idaho Falls	Nov 2011- Present	•	•	•	•	•	•		City of Idaho Falls / LHTAC
Watson St. Bridge	June 2010 - October 2011	•	•	•		•	•		ITD D-2/LHTAC/Cul De Sac

Kent J. Fugal, P.E., PTOE

Professional Registrations

- Idaho PE 9247 (1999)
- Utah PE 177864 (1994)

Education

- BS (1989), Civil Engineering, Brigham Young University
- MS (1990), Civil Engineering, Brigham Young University

Professional Certifications

- PTOE (2000)

Work History

- 9/2011 – Present, City of Idaho Falls
- 4/2004 – 9/2011, Project Engineering Consultants
- 7/2001 – 4/2004, J-U-B Engineers
- 4/2001 – 7/2001, City of Glendale, Arizona
- 11/1997 – 4/2001, MK Centennial/Washington Group
- 4/1995 – 11/1997, Pleasant Grove City, Utah
- 4/1988 – 4/1995, Horrocks Engineers

Mr. Kent Fugal joined the City of Idaho Falls in 2011 and aids in the design and Construction of City local federal aid projects. He works as the City Engineer. Prior to that, he worked as a consultant for over 19 years and in local government for three years. He served as the project manager, deputy project manager, traffic discipline manager, or project engineer for many federal aid projects as a consultant. In his local government experience, he has served as the agreement administrator, managing the work of consultants on federal aid projects. He has a broad background in traffic engineering and the design of roadways, drainage systems, utilities, traffic signals and roundabouts, as well as general civil and municipal engineering.

Relevant Federal Aid Projects Supported with Idaho Falls:

- 11155 John Adams Pkwy Bridge over the Idaho Canal (construction 2012/2013)
- 11247 Garfield St Bridge over the Idaho Canal (construction 2011/2012)
- 12472 Pancheri Bridge over the East Lateral Canal (design 2011-2013, construction 2013/2014)
- 13133 ADA Pedestrian Ramps & Concrete Improvements Citywide (2014)
- 11686 Pancheri Dr.; Bellin Rd to Skyline Dr (design 2011-2014)
- 12473 17th Street Rehabilitation Pancheri Bridge to Holmes Ave (2013)
- 14052 1st St & Holmes Ave Traffic Signal Reconstruction (design 2014-)
- 13132 Grandview Dr Skyline Dr to Saturn Ave (design 2013-)

Relevant Federal Aid Projects Prior to the City of Idaho Falls:

- Greenhurst Rd/S Powerline Rd and Greenhurst Rd/Southside Blvd Signals, Nampa (2004-2006)
- Sand Creek Byway, Sandpoint (traffic/pre-design support 2000-2001)

- WYE Interchange, Stage 2, Boise (construction phasing & work zone traffic control 1999-2001)
- SH-75 – Alturas to Timber Way, Blaine County (traffic signal, signing & striping, work zone traffic control 1999-2001)
- US-93 Twin Falls Alternate Route, Twin Falls (intersection and signing & pavement marking design 200-2001)
- US-95 Copeland NE – Corridor Study, Boundary County (corridor development and management plan 2000-2001)
- I-84 Corridor Study, Ada and Canyon Counties (1999-2000)
- 10600 South – 1300 East to 1750 East, Sandy, Utah (design 2010-2011)
- I-80 Climbing Lanes, Salt Lake and Summit Counties, Utah (design 2010-2011)
- 12300 South "Thru-Turn" Intersection, Draper, Utah (design 2010-2011)
- 30th/31st Streets and Wall Avenue, Ogden, Utah (design 1997-1999)
- Signal and Roadway Upgrades at SR-30 and 600 West, Logan, Utah (design 1997-1998)
- Signals and Roadway Upgrades at Three Locations; SR-48, SR-154, and SR-172, Salt Lake County, Utah (design 1998-1999)
- Signals and Roadway Upgrades at Three Locations on US-89; I-84 Eastbound, I-84 Westbound, and Nicholls Road, Weber County, Utah (design 1997)
- Signals and Roadway Upgrades in Brigham City and Slaterville, Box Elder and Weber Counties, Utah (design 1997-1998)
- Cache Valley Corridor Study, Cache County, Utah (design 1998-1999)
- University Avenue Interchange, Provo, Utah (design and environmental studies/documentation 1993-1995)
- Union Pacific Railroad Crossing Closures/ Consolidations, Utah County, Utah (design and environmental studies/documentation 1994)
- 1100 West, Weber County, Utah (environmental studies/documentation 1994-1995)
- Hastings Road, Grand County, Utah (environmental studies/documentation 1994)

Mr. Gary Olson joined the City of Idaho Falls in 2013 as the City Chief Inspector on City and local federal aid projects. He has over 10 years of experience in Inspection support on Federal aid projects as a Consultant prior to his tie with the City of Idaho Falls.

Relevant Federal Aid Projects Supported with Idaho Falls:

- 12472 Pancheri Bridge over the East Lateral Canal (2013/2014)
- 12473 17th St. Holmes to the Snake River Bridge (2013)
- 11155 John Adams Parkway Bridge over the Idaho Canal (2013)
- 13133 ADA Pedestrian Ramps & Concrete Improvements Citywide (2014)
- 11686 Pancheri Rd.; Bellin Rd to Skyline (2014/2015)

Professional Certifications

- WAQTC # 43665

Gary Olson (Qualification Number: 43,665)

ITD Inspector Qualifications

C. & S. (Original Qualification: Nov 2013 Expires: Nov 2018)

C.A. (Original Qualification: Oct 2013 Expires: Oct 2018)

E. & B. (Original Qualification: Oct 2013 Expires: Oct 2018)

S.T.& P.P. (Original Qualification: Nov 2013 Expires: Nov 2018)

TCI (Original Qualification: Oct 2013 Expires: Oct 2018)

WAQTC Sampler/Tester Qualifications

ACI-CFT (Original Qualification: Sep 2010 Expires: Sep 2015)

AgTT (Original Qualification: Feb 2009 Expires: Mar 2019)

AsTT (Original Qualification: Feb 2011 Expires: Feb 2016)

AsTT II (Original Qualification: Feb 2011 Expires: Feb 2016)

CLTT (Original Qualification: Jan 2012 Expires: Jan 2017)

DTT (Original Qualification: Apr 2012 Expires: Apr 2017)

EBTT (Original Qualification: Mar 2012 Expires: Mar 2017)

Mr. Michael A. Carlile joined the City of Idaho Falls in 2008 and aids in the design and inspection of City local federal aid projects. He works as a Design Tech in GIS & Inspector with the City.

Relevant Federal Aid Projects Supported with Idaho Falls:

- 12472 Pancheri Bridge over the East Lateral Canal (2013/2014)
- 13133 ADA Pedestrian Ramps & Concrete Improvements Citywide (2014)
- 11686 Pancheri Rd.; Bellin Rd to Skyline (2014/2015)

Education

BS in Geography from Utah State University, with a Minor in Geographic Information Science

Professional Certifications

- WAQTC # 23205

Michael Carlile (Qualification Number: 23,205)

ITD Inspector Qualifications

C. & S. (Original Qualification: Nov 2013 Expires: Nov 2018)

C.A. (Original Qualification: Nov 2013 Expires: Nov 2018)

TCI (Original Qualification: Nov 2013 Expires: Nov 2018)

WAQTC Sampler/Tester Qualifications

ACI-CFT (Original Qualification: Oct 2013 Expires: Oct 2018)

AgTT (Original Qualification: Apr 2014 Expires: Apr 2019)

Education

High School Graduate
Courses at EITC

Professional Certifications

Forklift Safety & Certification, Lifting & Ergonomics, Fire Safety, Fall Protection, OSHA, HazWoper 40 hr., GERT, Confined Spaces, Adult CPR and Workplace First Aid

Work History

- 2010-2013 Babcock Services, Inc., Office Administrator
- 2003-2009 CH2M HILL, Inc. and Subsidiaries, Office Admin. / Project Assist. / Communications Specialist / Community Advocacy / Marketing Coordinator.
- 1993-2003 Idaho Material Handling, Inc., Office Manager / Administrator
- 1992-1993 Daton Payroll Services, Payroll Customer Service Rep. / Payroll Supervisor
- 1990-1992 Martin Marietta, Payroll / Accounting Clerk
- 1989-1990 Ferrin-Manuel and Associates, Accounting Clerk / Office Manager
- 1988-1989 CGK, Inc., Full Charge Bookkeeper
- 1987-1988 Action Air, Inc., Receptionist/Accounting Clerk

Ms. Tami Nichols joined the City of Idaho Falls in May of 2013 and aids in the design and Construction of City local federal aid projects. She works as an Administrative Support/Document Controls with the City. Prior to that, she worked as a consultant for 10 years from 2003 to 2013 as a Project Assistant administering Federal Aid projects. Her prior experience includes 0 years at the Idaho Transportation Department (ITD).

Relevant Federal Aid Projects Supported with Idaho Falls:

- 12472 Pancheri Bridge over the East Lateral Canal (2013/2014)
- 13133 ADA Pedestrian Ramps & Copncrete Improvements Citywide (2014)
- 11686 Pancheri Rd.; Bellin Rd to Skyline (2014/2015)

Relevant Federal Aid Projects Prior to the City of Idaho Falls:

Babcock Services, Inc. *Office Administrator*

Subcontractor to CHN working transition on the Advanced Mixed Waste Treatment Plant at the Idaho National Lab. Assisted in locating professionals for DOE contractors RFP, negotiate terms of employment and reply with complete proposals. Coordinate new hire pre-employment screening and paper work.

CH2M Hill and Subsidiaries, *Project Assistant*

Provided document controls and project accounting. Coordinate logistic efforts for transition on the INL, ICP contract. Develop and maintain a small business data base to determine work relationships for business opportunities. Support area projects in safe, effective cleanup. Supply important internal communications to more than 2400 employees and subcontractors daily. Research, interview, and write articles for the company newsletters. Coordinate release of news to external media in Idaho, DOE Idaho, and DOE-HQ in Washington, DC.

Education

One year college

Professional Certifications

WAQTC # 20018

- Inspector Qualifications – C.&S., C. A., T. C. I.
- WAQTC – ACI-CFT, AgTT

Work History

Worked from fall of 1992 to 2000 inspecting road and bridge projects for the Idaho Transportation Dept. Joined the City of Idaho Falls in 2000 and have designed and inspected several projects for the City which have included Federal Aid projects.

Mr. Robert Cox joined the City of Idaho Falls in 2000 and aids in the design and Construction of City local federal aid projects. He works as an Inspector/Right-of-way Agent with the City. His prior experience includes 7.5 years at the Idaho Transportation Department (ITD) where he was charged with inspecting road projects as a Principal Inspector.

Relevant Federal Aid Projects Supported with Idaho Falls:

- 12472 Pancheri Bridge over the East Lateral Canal (2013/2014)
- 13133 ADA Pedestrian Ramps & Copncrete Improvements Citywide (2014)
- 11686 Pancheri Rd.; Bellin Rd to Skyline (2014/2015)
- Key #7979 Sunnyside Rd.

Relevant Federal Aid Projects Prior to the City of Idaho Falls:

- Several Interstate and State Highway projects

Yvona Gunderson

Yvona Gunderson joined the City of Idaho Falls in 1990 and aids in the design and construction of City local Federal Aid projects. She works as a Design Technician Supervisor in the Engineering Department.

Relevant Federal Aid Projects Supported with Idaho Falls:

- 12472 Pancheri Bridge over the East Lateral Canal (2013/2014)
- 13133 ADA Pedestrian Ramps & Concrete Improvements Citywide (2014)
- 11686 Pancheri Rd.; Bellin Rd to Skyline (2014/2015)
- 12473 17th Street Rehabilitation Pancheri Bridge to Holmes Ave
- 14052 1st St & Holmes Av Traffic Signal Reconstruction

Kenneth Baldwin Roberts, PLS

Professional Registrations

Idaho Licensed Land Surveyor
PLS 9755

Education

AAS Civil Engineering Tech

Work History

- 2001-Current City of Idaho Falls
- 2000-2001 A&E Engineering
- 1998-2000 Snake River Land Surveying-Rocky Mountain Engineering
- 1996-1998 Gordon Sorensen Engineering
- 1993-1996 JUB Engineering
- 1992 USFS Caribou National Forest Survey

Mr. Kenneth Roberts joined the City of Idaho Falls in 2001 and aids in the design and Construction of City local federal aid projects. He works as the City Surveyor within the City. Prior to that he worked as a consultant for 9 years from 1992 to 2001 as a Survey Crew Chief. His prior experience includes Surveying and Mapping, Property Boundary, Road and Bridge Staking, Industrial Surveying, and Disaster Road Reconstruction.

Relevant Federal Aid Projects Supported with Idaho Falls:

- 14052 - 1st St & Holmes Av Traffic Signal Reconstruction (Current)
- 13585 - 17th Street Rehabilitation Holmes Ave to Austin Ave
- 13132 Grandview Drive Reconstruction Skyline Dr. to Saturn Ave.
- 12472 Pancheri Bridge over the East Lateral Canal (2013/2014)
- 12473 - 17th Street Rehabilitation Pancheri Bridge to Holmes Ave
- 11686 Pancheri Rd.; Bellin Rd to Skyline (2014/2015)2001-Current
- 09616 Old Butte Rd. at US 20
- 7979 Sunnyside Road Construction 2007
- 7708 Hitt Road and Sunnyside Construction 2005
- Greenbelt Path - Pancheri Dr. to So. Tourist Park
- University Place Pathway - Freeman Park to UPRR Bridge

Relevant Federal Aid Projects Prior to the City of Idaho Falls:

- Interstate 15 from Exit 69 to Exit 71 widening. (1999+/-)
- Interstate 84 at Milepost 124 (1993+/-)

Neal Cunningham

Education

High School/some Tech collage

Work History

Mountain River inc. 1999-2011

Skidmore inc. 1995-1999

Mr. Neal Cunningham joined the City of Idaho Falls in May 2011 and aids in the design and Construction of City local federal aid projects. He works as a Survey Tech with the City. Prior to that he worked as a construction surveyor for10 years from in 1999 to 2011 surveying administering Federal Aid projects

Relevant Federal Aid Projects Supported with Idaho Falls:

- 12472 Pancheri Bridge over the East Lateral Canal (2013/2014)
- 13133 ADA Pedestrian Ramps & Concrete Improvements Citywide (2014)
- 11686 Pancheri Rd.; Bellin Rd to Skyline (2014/2015)

Brandon Mecham

Education

High School Grad/Some Tech College

Work History

- 2013-Current City of Idaho Falls Survey Tech
- 2008-2013 INL/Sub Contracted Surveyor
- 2005-2008 Schiess and Associates

Mr. Brandon Mecham joined the City of Idaho Falls in March 2013 and aids in the design and Construction of City local federal aid projects. He works as a Survey Tech with the City. Prior to that he worked as a construction surveyor for 8 years from 2005 to 2013.

Relevant Federal Aid Projects Supported with Idaho Falls:

- 12472 Pancheri Bridge over the East Lateral Canal (2013/2014)
- 13133 ADA Pedestrian Ramps & Copncrete Improvements Citywide (2014)
- 11686 Pancheri Rd.; Bellin Rd to Skyline (2014/2015)

Relevant Federal Aid Projects Prior to the City of Idaho Falls:

- INL Waste Treatment Plant. Instrument Man
- INL, 10 mile Road to connect MFC to INTEC. Crew Chief

Roger Schmitt

Key Responsibilities

Quality Control / Assurance

Project Design

Construction Support

Education

AAS – Computer-Aided Drafting Technology, 1999

Employment History

City of Idaho Falls, 2015-Present

Cude Engineers, 2006-2015 (Texas)

Mr. Schmitt graduated with an A.A.S. degree in 1999 and has worked in the Civil Engineering field ever since. He joined the City of Idaho Falls in 2015 with sixteen years of civil drafting and design experience. Working as a Designer with the City, Mr. Schmitt aids in the design and construction support of City local federal aid projects.

Relevant Federal Aid Projects Supported prior to City of Idaho Falls:

- ADA Improvements at 30 Northside Independent School District Elementary School Playgrounds (2010)
- ADA Improvements at 15 Northside Independent School District Elementary School Playgrounds (2011)

Relevant Federal Aid Projects Supported with City if Idaho Falls:

- 18995 12th Street Bridge over Idaho Canal
- 20304 Elva to Holmes and to North Tourist Park
- 20473 Lindsay Blvd. Railroad Crossing Improvements
- 27269 ADA and Sidewalk Improvements Citywide

Walker Grote

Key Responsibilities

- Multiple Field Survey Responsibilities
- Plat and Easement Reviews, Annexations

Work Location

- Idaho Falls, ID

Employment History

•Ellsworth & Associates PLLC 07/2007-03/2019

•City of Idaho Falls 03/2019-Current

Walker has served the City in the capacity of Survey Technician since March 2019. Walker was the field crew chief for Ellsworth & Associates, PLLC from July 2007 to March 2019.

His responsibilities with the City of Idaho Falls include multiple duties on the field crew such as running the GPS, running the Robotic Total Station, setting stakes etcetera. He also has office duties such as plat reviews, easement reviews as well as Annexation Ordinance drafting and writing legal descriptions for the annexations.

Relevant Projects Supported:

- 17th Street and Woodruff Right-of-Way
- Idaho Falls North Power Loop (Private Sector)
- Rigby High School (Private Sector)
- Record of Survey for ITD, Humphries, Idaho(PS)
- Multiple monument checks for new Intermountain Gas Company gas lines (Private Sector)
- Countless Lot Surveys and Section Breakdowns (PS)
- Multiple ALTA Surveys (Private Sector)

Forrest Ward

Key Responsibilities

- Survey Layout
- Preconstruction TOPO & Construction Support / Staking

Work Location

- Idaho Falls, ID

Employment History

- Eagle Rock Engineering
  2010-2015
- City of Idaho Falls
  2015-Present

Forrest started surveying in 2001. He has worked on a wide range of projects. Anything from Boundary and ALTA Surveys, to construction projects ranging from Subdivisions, Street reconstruct, to Western Federal Lands Projects at Craters of the Moon.

His responsibilities include creating survey layout, supervising survey crew, laying out engineered design in the field; performing plan reviews.

Relevant Projects Supported:

- Elm Street Roundabout
- 25th East & 17th Intersection
- East Green Belt Bike Path
- 1st Street water line & road reconstruct
- Gem State - Yearly report on the South Power Plant/Dam

Bill McKellip

Key Responsibilities

- Design & Drafting (PE reviewed & approved)

Work Location

- Idaho Falls, ID

Employment History

- 12/2017 - present
  City of Idaho Falls
  - Idaho Falls, ID
- 1/2006 – 12/2017
  Kinross – Round Mountain
  - Round Mountain, NV
- 5/2002 – 1/2006
  Special Operations Center, HWAD
  - Hawthorne, NV

Education

BA – Visual Arts - 2002
University of Jamestown

- Cum Laude

Certifications

- AutoCAD 2012 Professional
- AutoCAD 2013 Professional

Bill McKellip has served the City in the capacity of Design Technician since 2017. Josh has supported design and drafting efforts on a few projects including ITD, LHTAC and municipal work. Bill has 17 years design and drafting experience.

His responsibilities include designs for streets, water, sanitary sewer, storm drainage systems, parking lots, minor structures, and minor architectural designs in street right-of-ways. Details design projects and plans to include curve design for speed control, vertical sight distance for safety, and horizontal design for drainage; plots cross-sections for quantity figuring and symmetry between curbs and gutters and sidewalk, etc., to satisfy local, state, or federal standards. Establishes line and grade for Public Works projects; makes records of completed project location and direction for official records. Responds to community questions concerning Public Works utilities and other infrastructure mapping. Assists in preparation and presentation of economic and feasibility studies and reports. Prepares drawings, maps, and other records pertaining to field surveys, inspections, and traffic studies; solves geometric and trigonometric problems necessary for accurate completion of drawings. Assists in other Public Works projects and activities, including snow removal, as needed and various admin tasks.

Relevant Federal Aid Projects Supported with City if Idaho Falls:

- 20067 - Signal Head Visibility Improvements, Idaho Falls
- 20499 - Thermoplastic & ADA Improvements, Idaho Falls
- 13586 - Idaho Falls Microsurfacing
- 20834 – Mobility Enhancements for Elderly & Disabled, Idaho Falls

Cristy Wilkins

Education

BA – Design - California State University, Sacramento.

Cristy Wilkins joined the City of Idaho Falls in 2015 and aids in the design and Construction of City local federal aid projects. She works as a Designer with the City.

Relevant experience prior to Idaho Falls:

- 22 years ACAD drafting.
- 10 years Administrative paperwork for city, county, and federal aid projects.

Relevant Federal Aid Projects Supported with Idaho Falls:

- 18811 South Boulevard Corridor RRFB Light, Idaho Falls (2015)

Brian Cunningham

Key Responsibilities

- Design & Inspection
- Technical Reviews and Construction Support

Employment History

• Mountain River Engineering 1195 to 2012.
• HK Contractors 2012 to 2017.
)

Brian has served the City in the capacity of Construction Observer since 2017. Brian reviews all site plan and improvement drawings to verify design meets City standards and specifications. Inspects new subdivision QC/QA and that construction is built to the standards and specifications.

His responsibilities include working with the local engineering firms as they submit new subdivisions for approval in the City.

Brian has worked in the private sector overseeing design and construction of residential and commercial subdivisions throughout Bonneville, Bingham, Jefferson & Madison counties..

Brian worked as a lead estimator for a contractor for 6 years. He estimated construction costs for local, residential & commercial utilities and roadways and private projects in National Parks.

Relevant Federal Aid Projects Supported with City if Idaho Falls:

- Federal Aid Project Project 20499 Thermoplastic & ADA Improvemens
- Federal Aid Project 14049 ADA & Sidewalk Improvements

(22006) Yellowstone, Short & Capital Pedestrian Caccess Path Conenction
Project Development Services (not including Environmental)
LHTAC
10/29/2019

Exhibit A

LABOR DAY ESTIMATE SUMMARY

	SUMMARY	Total L-Hours	Proj Manager L-Hours	Designer L-Hours	Tech L-Hours	Office M. L-Hours	Survey L-Hours
1	City-Labor Hours	346.00	69.00	80.00	156.00	9.00	32.00

SALARY COSTS

A. Summary of Man-Day Costs

					Fully Loaded Hourly Rate		
1	Project Manager	69.00	L-Hours X	$54.74	$115.49	/hour =	$ 7,968.87
2	Designer	80.00	L-Hours X	$33.94	$71.60	/hour =	$ 5,728.23
3	Tech	156.00	L-Hours X	$29.11	$61.42	/hour =	$ 9,581.85
4	Office Manager	9.00	L-Hours X	$20.60	$43.47	/hour =	$ 391.19
5	Survey Crew *	32.00	L-Hours X	$56.93	$120.13	/hour =	$ 3,844.14

TOTAL DIRECT PAYROLL $ 27,514.28

B. Payroll Burden & Fringe Benefit Costs

1	ITD Office OH Rate	1.1100	2.1100	
2	Fee	0.0000	2.1100	
3	ITD Approved FCCM (with office OH rate only)	0.0000	2.1100	

TOTAL PAYROLL, BURDEN, FRINGE & FEE $ 27,514.28

C. Out-of-Pocket Costs - (See detail sheet)

1	City Direct Expenses		$ 104.400	=	$ 104.40

TOTAL ESTIMATED FEE $ 27,618.68

* Survey hours are crew hours (2-man crew).

(22006) Yellowstone, Short & Capital Pedestrian Caccess Path Conenction

Idaho Falls

1	Project Charter	Total L-Hours	PM L-Hours	Designer L-Hours	Tech L-Hours	Office M. L-Hours	Survey L-Hours
1.1	Environmental	-					
1.1	Project Charter Information	5.00	2.00	3.00			
1.3	Address Charter Comments	4.00	1.00		2.00	1.00	
1	TOTAL FOR CONCEPT RPT.	9.00	3.00	3.00	2.00	1.00	-

2	Survey	Total L-Hours	PM L-Hours	Designer L-Hours	Tech L-Hours	Office M. L-Hours	Survey* Crew-Hrs
2	Reference Survey Monuments/Topo	34.00	2.00				32.00
2	TOTAL FOR SURVEY	34.00	2.00	-	-	-	32.00

Idaho Falls

3	Final Design	Total L-Hours	PM L-Hours	Designer L-Hours	Tech L-Hours	Office M. L-Hours	Survey* Crew-Hrs
3.1	Prepare Plan Sheets	160.00	20.00	40.00	100.00		
3.2	Prepare Specifications	25.00	15.00	10.00			
3.3	Prepare Schedule	4.00	4.00				
3.4	Final Design Review and Comments	14.00	2.00	4.00	8.00		
3	TOTAL FOR FINAL DESIGN	203.00	41.00	54.00	108.00	-	-

4	PS & E	Total L-Hours	PM L-Hours	Designer L-Hours	Tech L-Hours	Office M. L-Hours	Survey* Crew-Hrs
4.1	PS & E SUBMITTAL	70.00	15.00	15.00	40.00		
4.2	ADVIRTISMENT REVIEW/SUPPORT	22.00	4.00	8.00	6.00	4.00	
4	TOTAL FOR PROJECT PS & E	92.00	19.00	23.00	46.00	4.00	-

5	Monthly Invoices	Total L-Hours	PM L-Hours	Designer L-Hours	Tech L-Hours	Office M. L-Hours	Survey* Crew-Hrs
5	Monthly Invoices	8.00	4.00			4.00	
	Total	**346.00**	**69.00**	**80.00**	**156.00**	**9.00**	**32.00**

(22006) Yellowstone, Short & Capital Pedestrian Caccess Path Conenction
Project Development Services (not including Environmental)
LHTAC
10/29/2019 Exhibit A

Wages	PM	Designer	Tech	Office Man	Survey
Chris Canfield	54.10				
Kent Fugal	55.37				
Kenny Roberts					40.57
Neal Cunningham			30.98		
Yvona Gunderson		38.72			
Walker Grote					20.86
Bill McKellip			27.52		
Brandon Mecham					23.97
Cristy Wilkins			28.83		
Joseph Schmitt		29.53			
Michael Carlile		30.98			
Robert Cox		36.51			
Tami Nichols				20.60	
Average	54.74	33.94	29.11	20.60	56.93

(22006) Yellowstone, Short & Capital Pedestrian Caccess Path Conenction
Project Development Services (not including Environmental)
LHTAC

Exhibit A

DIRECT EXPENSES

	Total			
Number of Trips (engr 1 x per month)	5	Trips		
Average Miles per Trip (engr)	9	Mi	45	Mi
Nukmber of Trips (designer)	15			
Average miles per trip (designer)	9		135	Mi
Total Miles			180	
Cost per Mile	$ 0.5800	/Mi		
Total Mileage Cost*			$ 104.40	
Total Direct Cost			$104.40	

EXHIBIT B

(22006) Yellowstone, Short & Capital Pedestrian Caccess Path Co Exhibit B
Construction Engineering & Inspection
10/29/2019

LABOR DAY ESTIMATE SUMMARY

	SUMMARY	Total L-Hours	Proj Manager L-Hours	Chief Inspector L-Hours	Tech L-Hours	Office M. L-Hours	Survey L-Hours
1	City-Labor Hours	456.00	88.00	83.00	223.00	50.00	12.00

SALARY COSTS

A. Summary of Man-Day Costs

					Fully Loaded Hourly Rate		
1	Project Manager	88.00	L-Hours X	$54.10	$114.15	/hour =	$ 10,045.29
2	Chief Inspector	83.00	L-Hours X	$37.65	$79.44	/hour =	$ 6,593.64
3	Trans Technician	223.00	L-Hours X	$32.82	$69.26	/hour =	$ 15,444.36
4	Office Manager	50.00	L-Hours X	$20.60	$43.47	/hour =	$ 2,173.30
5	Survey *	12.00	L-Hours X	$55.25	$116.58	/hour =	$ 1,398.93

TOTAL DIRECT PAYROLL $ 35,655.53

B. Payroll Burden & Fringe Benefit Costs

1	ITD Office OH Rate	1.1100	2.1100	

TOTAL PAYROLL, BURDEN, FRINGE & FEE $ 35,655.53

C. Out-of-Pocket Costs - (See detail sheet)

1	City Direct Expenses		$ 1,674.000	=	$ 1,674.00

TOTAL ESTIMATED FEE $ 37,329.53

* Survey requires a 2-man crew.

EXHIBIT B

Idaho Falls

1	CONSTRUCTION ADMINISTRATION	Total L-Hours	PM L-Hours	CI L-Hours	Tech L-Hours	Office M. L-Hours	Survey L-Hours
1.1	General Contract Administration	-					
1.1	Submittal Log & Min. Testing Requirements	1.00	1.00				
1.2	Pre-Construction Conference	3.00	1.00	1.00	1.00		
1.3	Labor Compliance	18.00	2.00		8.00	8.00	
1.4	Civil Rights Compliance	8.00			4.00	4.00	
1.5	Filing & Records Verification	8.00				8.00	
1.6	Progress Estimates	8.00	4.00			4.00	
1.7	Materials Certifications	20.00	8.00	8.00		4.00	
1.7.1	MTR	8.00	4.00	4.00			
1.7.2	Source Approvals	-					
1.7.3	Mix Design Reviews	2.00	2.00				
1.8	Contract Changes	2.00	2.00				
1.9	Weekly Progress Meetings	12.00	4.00	4.00		4.00	
1.10	Payroll Submittals	6.00	2.00			4.00	
1.11	Change Orders	4.00	2.00			2.00	
1.12	Submittal Reviews	32.00	16.00	16.00			
1.13	Claims	-	0.00	0.00			
1	TOTAL FOR CONTRACT ADMIN.	132.00	48.00	33.00	13.00	38.00	-

2	Survey Control	Total L-Hours	PM L-Hours	CI L-Hours	Tech L-Hours	Office M. L-Hours	Survey* L-Hours
2	Survey Verification	18.00	2.00	4.00			12.00
2	TOTAL FOR SURVEY CONTROL	18.00	2.00	4.00	-	-	12.00

EXHIBIT B Idaho Falls

3	PROJECT INSPECTION	Total L-Hours	PM L-Hours	CI L-Hours	Tech L-Hours	Office M. L-Hours	Survey* Crew-Hrs
3.1	On Site Inspection/Diaries	220.00	16.00	24.00	180.00		
3.2	Deficiency reporting & Recommendations	4.00	2.00	2.00			
3.3	Pay Documents	48.00	12.00	12.00	24.00		
3.4	Environmental and Erosion Control Monitoring	-	0.00	0.00			
3	TOTAL FOR PROJECT INSPECTION	272.00	30.00	38.00	204.00	-	-

EXHIBIT B

4	PROJECT CLOSE OUT	Total L-Hours	PM L-Hours	CI L-Hours	Tech L-Hours	Office M. L-Hours	Survey* Crew-Hrs
4.1	Document Review	5.00				5.00	
4.2	Final Payment Certifications	4.00				4.00	
4.3	Substantial Completion Inspection	14.00	3.00	4.00	6.00	1.00	
4.4	Final Inspection	7.00	3.00	4.00			
4	TOTAL FOR PROJECT CLOSEOUT	30.00	6.00	8.00	6.00	10.00	-

5	Monthly Invoices	Total L-Hours	PM L-Hours	CI L-Hours	Tech L-Hours	Office M. L-Hours	Survey* Crew-Hrs
5	Monthly Invoices	4.00	2.00			2.00	
	Total	**456.00**	**88.00**	**83.00**	**223.00**	**50.00**	**12.00**

EXHIBIT B

(22006) Yellowstone, Short & Capital Pedestrian Caccess Path Conenction
Construction Engineering & Inspection

10/29/2019

Wages	PM	CI	Tech	Office Man	Survey
Chris Canfield	54.10				
Kenny Roberts					40.57
Walker Grote					20.86
Forest Ward					25.1
Neal Cunnnigham			30.98		
Brandon Mecham					23.97
Gary Olson		37.65			
Michael Carlile			30.98		
Robert Cox			36.51		
Tami Nichols				20.60	
Average	54.10	37.65	32.82	20.60	55.25

EXHIBIT B

(22006) Yellowstone, Short & Capital Pedestrian Caccess Path Conenction
Construction Engineering & Inspection

DIRECT EXPENSES

	Total			
Number of Trips (engr 1 x per week)	10	Trips		
Average Miles per Trip (engr)	5	Mi	50	Mi
Number of Trips (observer)	50			
Average miles per trip (observer)	5		250	Mi
Total Miles			300	
Cost per Mile	$ 0.5800	/Mi		
Total Mileage Cost*			$ 174.00	
Testing (Compaction)			$1,500.00	
Total Direct Cost			$1,674.00	

IDAHO FALLS

CERTIFIED PAYROLL RATES

Fiscal Year 2019-2020

EMPLOYEE NAME	POSITION/CLASSIFICATION	HOURLY WAGE RATE	SALARY*	EFFECTIVE DATE
Canfield, Chris D	Asst. Public Works Director	54.10	112,528	10/1/2019
	Grade/Step Increase	-	-	Next- 5/23/2021
Carlile, Michael A	Design Technician	30.98	64,438	10/1/2019
	Grade/Step Increase	-	-	Next-8/29/2021
Cox, Robert D	Right-Of-Way Agent	35.82	74,506	10/1/2019
	Grade/Step Increase	36.51	75,941	12/20/2020
Cunningham, Brian	Civil Engineer I	33.31	69,285	10/1/2019
	Grade/Step Increase	34.92	72,634	11/24/2019
Cunningham, Neal J	Project Inspector	30.33	63,086	10/1/2019
	Grade/Step Increase	30.98	64,438	8/16/2020
Fugal, Kent J	City Engineer	55.37	115,170	10/1/2019
	Grade/Step Increase	-	-	Next-2/27/2022
Grote, Walker	Survey Office Field Tech	19.99	41,579	10/1/2019
	Grade/Step Increase	20.86	43,389	3/29/2020
Gunderson, Yvona	Design Technician Supervisor	38.72	80,538	10/1/2019
	Grade/Step Increase	-	-	Next-6/06/2021
Higdon, Megan A	GIS Intern	11.00	11,440	5/7/2019
	Temporary-No Grade/Step			
Mckellip, William E	Design Technician	26.37	54,850	10/1/2019
	Grade/Step Increase	27.52	57,242	1/5/2020
Mecham, Brandon D	Instrument Survey Technician	23.97	49,858	10/1/2019
	Grade/Step Increase	-	-	Next-2/28/2021
Nichols, Tami N	Office Asst II - Engineering	20.60	42,848	10/1/2019
	Grade/Step Increase	-	-	Next-5/11/2021
Olson, Gary L	Construction Inspection Chief	37.65	78,312	10/1/2019
	Grade/Step Increase	-	-	Next-11/7/2021
Roberts, Kenneth B	Chief Surveyor	40.57	84,386	10/1/2019
	Grade/Step Increase	-	-	Next-4/11/2021
Schmitt, Joseph R	Design Technician	28.83	59,966	10/1/2019
	Grade/Step Increase	29.53	61,422	11/10/2019
Ward, Forrest D	Survey Crew Chief	23.89	49,691	10/1/2019
	Grade/Step Increase	25.10	52,208	11/10/2019
Wilkins, Cristy D	Design Technician	27.52	57,242	10/1/2019
	Grade/Step Increase	28.83	59,966	8/30/2020

The undersigned herby certifies the above labor rates are true and correct as of October 22, 2019 and are effective until 9/30/20.

Megan Ricks	10/22/2019

Megan Ricks, Accountant

*Based on 2,080 hrs/year for Full-Time employees and 1,040 hrs/year for Part-Time employees

IDAHO FALLS

MEMORANDUM

FROM: Chris H Fredericksen, Public Works Director

DATE: Wednesday, February 5, 2020

RE: Approval of the State/Local Agreement with Idaho Transportation Department for the ADA Sidewalk and Thermoplastic Upgrades project

Council Action Desired

☐ Ordinance ☐ Resolution ☐ Public Hearing

☒ Other Action (Approval, Authorization, Ratification, etc)

Approval of the State/Local Agreement for construction with the Idaho Transportation Department for ADA Sidewalk and Thermoplastic Upgrades project for Mayor and City Clerk to sign both documents (or take other action deemed appropriate).

Description, Background Information & Purpose

Attached for your consideration is a State/Local Agreement and Resolution with the Idaho Transportation Department (ITD) for the construction of ADA sidewalk and thermoplastic improvements on various streets. The agreement combines two separate projects into one that should help lower bid costs as the two projects will bid as a combined package. ADA corner upgrades will be completed on 5th Street, 9th Street, 10th Street and 12th Street between South Boulevard and Holmes Avenue. ADA corner upgrades will also be completed along 25th Street, John Adams Parkway and Garfield Street and thermoplastic crosswalks will be placed on minor street approaches to these streets.

Relevant PBB Results & Department Strategic Plan

☐ ☐ ☐ ☐ ☒ ☒ ☐ ☒

This agreement supports the community-oriented results of safe and secure community, reliable public infrastructure and enhanced livability by making ADA improvements at various intersections and by making crosswalks more visible to drivers.

Interdepartmental Coordination

Project reviews have been conducted with all necessary city departments to ensure coordination of project activities.

Fiscal Impact

The total estimated cost of the project is $679,000.00 . This agreement requires city financial contribution toward the project with a match rate of 7.34% for an estimated total of $49,838.60. However, in-kind services provided by the city are anticipated to exceed match requirements so no financial contributions are anticipated at this time.

Legal Review

The Agreement has been reviewed by the City Attorney.

STATE/LOCAL AGREEMENT
(CONSTRUCTION)

ADA SIDEWALK IMPR STG 2	**THERMOPLASTIC & ADA IMPR**
CITY OF IDAHO FALLS	**CITY OF IDAHO FALLS**
PROJECT NO. A014(049)	**PROJECT NO. A020(499)**
KEY NO. 14049	**KEY NO. 20499**

PARTIES

THIS AGREEMENT is made and entered into this _____ day of _____, _____, by and between the **IDAHO TRANSPORTATION BOARD** by and through the **IDAHO TRANSPORTATION DEPARTMENT**, hereafter called the State, and the **CITY OF IDAHO FALLS**, acting by and through its Mayor and Council, hereafter called the Sponsor.

PURPOSE

The Sponsor has requested federal participation in the costs of constructing Project No. A014(049) to consist of upgrading all street crossings to meet current ADA compliance, and Project No. A020(499) to consist of installing thermoplastic stop bars and crosswalks at approximately 60 locations throughout the City. This Agreement sets out the responsibilities of the parties in the construction and maintenance of the projects.

Authority for this Agreement is established by Section 40-317 of the Idaho Code.

The Parties agree as follows:

SECTION I. GENERAL

1. This Agreement is entered into for the purpose of complying with certain provisions of the Federal-Aid Highway Act in obtaining federal participation in the construction of the projects.

2. Federal participation in the costs of the projects will be governed by the applicable sections of Title 23, U.S. Code (Highways) and rules and regulations prescribed or promulgated by the Federal Highway Administration.

3. Funds owed by the Sponsor shall be remitted to the State through the ITD payment portal at: *https://apps.itd.idaho.gov/PayITD* .

4. All information, regulatory and warning signs, pavement or other markings, and traffic signals, the cost of which is not provided for in the plans and estimates, must be erected at the sole expense of the Sponsor upon the completion of the projectS.

5. The location, form and character of all signs, markings and signals installed on the project, initially or in the future, shall be in conformity with the Manual of Uniform Traffic Control Devices as adopted by the State.

6. This State/Local Agreement (Construction) upon its execution by both Parties, supplements the State/Local Agreements for project development by and between the same parties, dated April 27, 2015 (Key No. 14049) and June 11, 2018 (Key No. 20499).

7. The Sponsor has obtained approval to perform in-kind work on these projects as shown on the Request for Approval of In-kind Work by Local Sponsor on Federal-aid Projects, attached to the Project Development agreements referenced in Paragraph 6 above.

8. Sufficient Appropriation. It is understood and agreed that the State is a governmental agency, and this Agreement shall in no way be construed so as to bind or obligate the State beyond the term of any particular appropriation of funds by the Federal Government or the State Legislature as may exist from time to time. The State reserves the right to terminate this Agreement if, in its sole judgment, the Federal Government or the legislature of the State of Idaho fails, neglects or refuses to appropriate sufficient funds as may be required for the State to continue payments. Any such termination shall take effect immediately upon notice and be otherwise effective as provided in this Agreement.

SECTION II. That the State shall:

1. Enter into an Agreement with the Federal Highway Administration covering the federal government's pro rata share of construction costs.

2. Advertise, open bids, prepare a contract estimate of cost based on the successful low bid and notify the Sponsor thereof.

3. Award a contract for construction of the projects, based on the successful low bid, if it does not exceed the State's estimate of cost of construction by more than ten (10) percent. If the low bid exceeds the estimate by more than 10%, the bid will be evaluated, and if justified, the contract will be awarded and the Sponsor will be notified.

4. Obtain concurrence of the Sponsor before awarding the contract if the Sponsor's share of the low bid amount exceeds the amount set forth in Section III, Paragraph 1 by more than ten (10) percent.

5. Provide to the Sponsor sufficient copies of the Contract Proposal, Notice to Contractors, and approved construction plans.

6. Designate a resident engineer as the State deems necessary to supervise and oversee the overall progress and construction of the projects in accordance with the plans and specifications in the manner required by applicable state and federal regulations. This engineer, or his authorized representatives, will review and approve all monthly and final contract estimates and change orders.

7. Appoint the Local Highway Technical Assistance Council as the contract administrator for the State.

8. Authorize the Sponsor to administer the projects and make any necessary changes and decisions within the general scope of the plans and specifications. Prior approval of the State will be obtained if it is necessary to deviate from the plans and specifications during the life of the construction contract.

9. Authorize the Sponsor to provide construction inspection, sampling and testing (IS&T) services on the project. Requirements for IS&T Services are detailed in Exhibit B to this Agreement.

10. Within sixty (60) days of receipt of invoices from the Sponsor for the Sponsor's contract administration and inspection costs, review and credit the federal participating amount towards the sponsor's match.

11. Upon receipt of contract estimates of construction costs from the Sponsor, process and make payment to the general contractor.

12. Review the materials certification documentation, make appropriate determination of participation, and prepare the materials certification in accordance with the State's Quality Assurance Manual.

13. Maintain complete accounts of all project funds received and disbursed, which accounting will determine the final project costs.

14. Conduct a final cost accounting of the projects, which will reconcile eligibility for federal reimbursement with the costs recorded in the project program. The district records inspector will submit a report of expenditures, and a report of completion that will include materials certification, a final invoice, detail of final estimate, change order summary, and any contractor claims.

    The final cost accounting will determine if overpayments must be recovered from the Sponsor, or if final reimbursements are due to the Sponsor. Any excess funds transmitted by the Sponsor and not required for the project will be applied to any outstanding balance the Sponsor may have on a previously completed project. If no such outstanding balance exists, the excess funds will be returned to the Sponsor.

15. Perform a final inspection of the projects upon completion of construction.

16. Upon satisfactory inspection and project closeout, execute a Certification and Acceptance of Project, and provide a copy to the Sponsor.

17. Subject to the limitations hereinafter set forth, State shall indemnify, defend and save harmless Sponsor from and against any and all demands, claims or liabilities caused by or arising out of any negligent acts by State, or State's officers, agents, and employees while acting within the course and scope of their employment, which arise from this project. Any such indemnification hereunder by State is subject to the limitations of the Idaho Tort Claims Act (currently codified at chapter 9, title 6, Idaho Code). Such indemnification hereunder by State shall in no event cause the liability of State for any such negligent act to exceed the liability limits set forth in the Idaho Tort Claims Act. Such indemnification shall in no event exceed the amount of loss, damages, expenses or attorney fees attributable to such negligent act, and shall not apply to loss, damages, expenses or attorney fees attributable to the negligence of Sponsor.

SECTION III. That the Sponsor shall:

1. Be responsible for its share of the cost for construction plus preliminary engineering, and construction engineering & inspection (CE&I). These costs and the Sponsor's match are detailed in the attached *Worksheet for State/Local Construction Agreements* marked Exhibit A. The actual cost to the Sponsor will be determined from the total quantities obtained by measurement plus the actual cost of engineering and contingencies required to complete the work. Construction engineering and contingencies will be approximately 16% of total construction cost.

2. Upon approval of the lowest qualified bid received, if the Sponsor's share exceeds the amount set forth in Section III, Paragraph 1, transmit to the State the Sponsor's portion of such excess cost.

3. Designate Chris Canfield, Assistant Public Works Director, as its agent to administer the project in accordance with the plans and specifications in the manner required by applicable state and federal regulations. The designated agent will prepare all monthly and final contract estimates and change orders, and submit all change orders to the State for their review and approval.

4. Designate Sponsor personnel to provide construction inspection, sampling and testing (IS&T) services on the project as detailed in Exhibit B to this Agreement.

5. Estimate the anticipated project completion costs when construction costs reach 85% of the funds that have been obligated for the project. The Sponsor shall monitor construction costs, and if costs are anticipated to exceed 105% of the total project costs, provide for additional funding necessary to complete the project.

6. Submit invoices to the State on a monthly basis for the contract administration costs of this project, to be credited toward the Sponsor's match per Section II, Paragraph 10 of this Agreement.

7. Submit contract estimates of construction costs to the State on a monthly basis.

8. Upon receipt of the statement referred to in Section II, Paragraph 14 indicating an adjustment in cost against the Sponsor, promptly remit such amount to the State.

9. Maintain the projects upon completion to the satisfaction of the State. Such maintenance includes, but is not limited to, preservation of the entire roadway surface, shoulders, roadside cut and fill slopes, drainage structures, and such traffic control devices as are necessary for its safe and efficient utilization. Failure to maintain the project in a satisfactory manner will jeopardize the future allotment of federal-aid highway funds for projects within the Sponsor's jurisdiction.

10. To the extent provided by the Idaho Tort Claims Act, indemnify, save harmless, and defend, regardless of outcome the State from expenses of, and against suits, actions, claims, or losses of every kind, nature, and description, including costs, expenses, and attorney fees that may be incurred by reason of any negligence of the Sponsor in the work which is the subject of this Agreement.

EXECUTION

This Agreement is executed for the State by its Highways Construction and Operations Division Administrator, and executed for the Sponsor by the Mayor, attested to by the City Clerk, with the imprinted corporate seal of the City of Idaho Falls.

IDAHO TRANSPORTATION DEPARTMENT

_____
Division Administrator
Highways Construction and Operations

ATTEST:

CITY OF IDAHO FALLS

_____
City Clerk

_____
Mayor

(SEAL)

By regular/special meeting
on _____.

hm: 14049 20499 SLAConst.docx

RESOLUTION

WHEREAS, the Idaho Transportation Department, hereafter called the **STATE**, has submitted an Agreement stating obligations of the **STATE** and the **CITY OF IDAHO FALLS**, hereafter called the **CITY,** for construction of ADA Sidewalk Impr Stg 2 and Thermoplistic & ADA Improvements; and

WHEREAS, the **STATE** is responsible for obtaining compliance with laws, standards and procedural policies in the development, construction and maintenance of improvements made to the Federal-aid Highway System when there is federal participation in the costs; and

WHEREAS, certain functions to be performed by the **STATE** involve the expenditure of funds as set forth in the Agreement; and

WHEREAS, The **STATE** can only pay for work associated with the State Highway system; and

WHEREAS, the **CITY** is fully responsible for its share of project costs; and

NOW, THEREFORE, BE IT RESOLVED:

1. That the Agreement for Federal Aid Highway Projects A014(049) and A020(499) is hereby approved.

2. That the Mayor and the City Clerk are hereby authorized to execute the Agreement on behalf of the **CITY.**

3. That duly certified copies of the Resolution shall be furnished to the Idaho Transportation Department.

CERTIFICATION

I hereby certify that the above is a true copy of a Resolution passed at a *regular, duly* called special (X-out non-applicable term) meeting of the City Council, City of Idaho Falls, held on _____, _____.

(Seal)

_____
City Clerk

WORKSHEET FOR STATE / LOCAL CONSTRUCTION AGREEMENTS

Key No:	14049 / 20499
Project No:	A014(049) / A020(499)
Project Name:	ADA Sidewalk Impr Stg 2/ Thermoplastic & ADA Improvements
Sponsor:	City of Idaho Falls
Description of work:	This project will upgrade all the street crossings to meet the current ADA compliance.

This project will install thermoplastic stop bars and crosswalks at approximately 60 locations.

Date of State/Local Agreement for Project Development: 4/27/15 & 6/11/18

		FEDERAL	LOCAL
TOTAL ESTIMATED COST OF CONSTRUCTION *Includes E&C*	$654,000		
APPROVED FORCE ACCOUNT WORK	$0		
PLUS PE BY STATE *(from 2101)*	$3,000		
PLUS PC BY LHTAC *(from 2101)*	$22,000		
PLUS PC *(from PC Agreements)*	$0		
MINUS ALL NON-PARTICIPATING	$0		
PARTICIPATING TOTAL	$679,000		
MATCH PERCENTAGES		92.66%	7.34%
PERCENTAGE AMOUNTS		$629,161.40	$49,838.60
MINUS FEDERAL MAXIMUM		$0	
ADD OVERAGE *(If Any To Local)*		629,161	$0
LOCAL SHARE OF CONSTRUCTION AMOUNT			*$49,839*

ADJUSTMENTS

PLUS ALL NON-PARTICIPATING (From above if work by contract)	$0
MINUS FUNDS ADVANCED BY THE SPONSOR FOR STATE PE *(from PD Agreement)*	$3,000
MINUS APPROVED FORCE ACCOUNT WORK *(From above)*	$0
MINUS ESTIMATED IN-KIND SERVICES BY LOCAL	$61,666

(As identified in the state/local agreements for project development)
(Amounts must be supported by District Records Inspector Audit)

CONSTRUCTION AMOUNT REQUIRED FROM SPONSOR AFTER ADJUSTMENTS -$14,827

Comments:

PREPARED BY: Heather Parker Date: 1/17/2020

EXHIBIT B

Construction Inspection, Sampling and Testing Services

The Sponsor shall provide services relating to office and field documentation, Verification Sampling & Testing of materials and inspection staff. The Sponsor shall provide oversight and coordination activities of the project staff which will include Sampler/Testers with the necessary Western Alliance for Quality Transportation Construction (WAQTC) qualifications and skills to perform all associated tests for Aggregate, Embankment & Base/In-Place Density, Asphalt and Concrete. Inspectors shall be IQP (ITD) Certified Inspectors with sufficient skills and experience to assist in administration of this construction project, from project start up, throughout the duration of the construction activities and through project closeout. The project will be administered to ensure compliance with the following contract documents: Special Provisions, sealed Project Drawings and Plans; 2012 (or current) Idaho Standard Specifications for Highway Construction; January 2013 (or current) Supplemental Specifications; July 2013 (or current) QC/QA Special Provisions (QASP); SP-SA Special Provisions- Federal Aid; and all addenda issued prior to bid opening.

The Sponsor shall provide the qualified personnel as necessary to effectively carry out its responsibilities under this agreement.

The work required by this project is as follows:

I. Construction Administration

This consists of all necessary efforts to administer the project construction contract under the direction of the Idaho Transportation Department (ITD). The Sponsor will be responsible to ensure the project is completed and accepted by the ITD and the Federal Highway Administration (FHWA). This will require interpretation of the plans, coordination of changes to the project, assistance in processing change orders, resolving disputes, claims analysis, and all other engineering tasks normally handled by a Project Engineer/Manager. In addition, the Sponsor shall provide photographic equipment, safety equipment as well as any other necessary items to perform the work. Quality and quantity of these items shall meet with ITD approval. Sponsor is to provide all necessary personnel safety equipment in accordance with OSHA, MSHA, Department of Labor, FHWA, MUTCD and ITD standards and conduct safety reviews/inspections as necessary to ensure a safe work environment.

The Sponsor shall:

1. Under the direction of ITD, act as the Resident Engineer's authorized representative as defined in the Contract Documents. The extent and limitation of the duties, responsibilities and authority of the Engineer as assigned in said Contract Documents shall not be modified, except as the Engineer may otherwise agree in writing. Serve as ITD's liaison with the Contractor, working principally through the Contractor's superintendent and assist in understanding the intent of the Contract Documents.

2. Provide general contract administration on the construction contract in accordance with the ITD Contract Administration Manual, and assist the Project Manager in monitoring Contractor's compliance with contract requirements. Notify Resident Engineer when Contractor is found in non-compliance.

3. Analyze the plans, specifications, special provisions and other contract documents, and recommend to the ITD any necessary or desirable changes to accomplish the project in accordance with the plans and specifications.

4. Attend and assist in the facilitation of pre-construction conferences, partnering meetings, job conferences, weekly coordination meetings, pre-operational meetings, public information meetings, and other project related meetings. Take and maintain notes of all meetings and conferences and then distribute copies to participants within one week.

5. Document any project delay or potential delay caused by conflicts or utilities.

6. Analyze the Contractor's work schedule (Critical Path Diagram, CPM) when submitted and make recommendations to the ITD regarding any changes, or needed changes, to the schedule. Monitor the Contractor's adherence to the work schedule during construction.

7. Maintain a complete set of project records, including daily diaries, quantities for pay items, progress estimates, material deliveries and correspondence.

8. Maintain a daily record of each pay item for the progress estimate. Quantities will be based on daily records and calculations. All such records will be retained.

9. Prepare pay items for posting to ledgers in accordance with established procedures and submit to the ITD with recommendation for payment. The recommendation will be based on such observations and review that, to the best of the Sponsor's knowledge, information and belief, the contractor's work has progressed to the point indicated, the quality of such work is generally in accordance with the Contract Documents, and the conditions precedent to the Contractor's being entitled to such payment appear to have been fulfilled.

10. Track and maintain a log on all shop drawing and/or sample submittal and encourage all reviewers to complete their review in a timely manner. Deficiencies will be immediately reported to the ITD.

11. Identify and monitor all project permit requirements and notify the Contractor and ITD immediately when violations or potential violations occur.

12. Upon notice by the Contractor of pending claims for extra work or work beyond the original scope, maintain accurate records showing actual cost of such work.

13. Analyze and make recommendations to the ITD on all requests received from the Contractor for time extensions, contract changes, and extra work.

14. Coordinate all contract changes with the Contractor, ITD, and others as required.

15. Monitor and reinforce each Contractor's compliance with contract provisions in regard to payment of predetermined wage rates in accordance with ITD procedures. This includes verifying Contractor and Subcontractor's payrolls for format classification, pay scale, timely submissions, and concurrence with field reviews. Maintain filing system for payrolls and labor interviews and notify contractors on incorrect classification, pay scales, etc.

16. Monitor and reinforce each Contractor's compliance with contract provisions in regard to Equal Employment Opportunity and Affirmative Action and check job site at least once to verify bulletin board and posters adhere to the contract. Coordinate corrective actions with the ITD.

17. Monitor and reinforce each Contractor's compliance with contract provisions in regard to environmental provisions and permits.

18. Assist ITD in preparing for any litigation or other action that may arise. Prepare claim package in accordance with Memo No. 28 of the Contract Administration Manual on all claims of ITD and Contractor relating to the acceptability of the Contractor's work or the interpretation of the requirements of the Contract Documents pertaining to the execution and progress of the Contractor's work.

II. Survey Control

The Sponsor shall be responsible for verifying the existence and accuracy of location for all reference points and baseline control points indicated on the plans. In performing verification surveys of construction layout, the Sponsor shall:

1. Make and record such measurements as necessary to calculate and document quantities for pay items.

2. Do independent check and verify line, grade, and structure layout.

3. Perform incidental engineering surveys as directed to carry out the services covered by this agreement and to verify and confirm the accuracy of the contractor's survey layout work. All survey work shall be performed under the supervision of a Surveyor registered in Idaho.

III. Project Inspection

There are four distinct and independent areas of inspection and materials testing associated with this project which is as follows:

- Materials Quality Control (QC) and acceptance sampling and testing and inspection when materials are installed into the work by the Contractor.

- Materials verification sampling and testing and inspection to verify the results of the acceptance testing and inspection performed by the Contractor.

- Independent Assurance evaluations will be performed by ITD Materials Section.

- Dispute resolution sampling and testing.

The Sponsor shall coordinate any IA inspections that may be required with ITD.

This includes all work necessary to monitor the Contractor's work in progress to verify the work is in substantial conformance with the Contract Documents. ITD must approve all the inspectors working under this agreement before doing any work on this project. All inspectors will meet the requirements outlined in the Contract Administration Manual, Section 114. Inspectors shall be IQP (ITD) certified Inspectors with sufficient skills and experience to assist in administration of this construction project, from project start up, throughout the duration of the construction activities and through project closeout.

The Sponsor shall provide construction inspection as needed to ensure a quality project. Senior inspectors shall be high school graduates (or GED equivalent) with a minimum of eight (8) years of experience in construction inspection. Inspectors shall be high school graduates (or GED equivalent) with at least three (3) years experience in construction inspection. Inspectors in charge of reviewing the contractor's traffic control shall be TCI IQP certified.

The Sponsor shall:

1. Conduct on-site inspection of the Contractor's work in progress to determine if the work is in accordance with the Contract Documents. Prepare daily reports on ITD forms recording the Contractor's hours on the site, weather conditions, data relative to questions of change orders, field orders, or changed conditions, site visitors, daily activities, decisions, observations in general, and specific observations in more detail as the case of observing test procedures; maintain in the project files, and send copies to ITD on a weekly basis.

2. Assist in enforcing the current ITD safety policy and the safety provisions of the contract. Take immediate action if warranted and report immediately to ITD the occurrence of: safety deficiencies, incidences, hazardous environmental conditions, emergencies, or acts of God endangering: personnel, work, property or the environment.

3. Report to ITD whenever part of the Contractor's work in progress may not produce a completed project that conforms to the Contract Documents or may prejudice the integrity of the design concept of the completed project as a functioning whole as indicated in the Contract Documents.

4. Identify and recommend corrections for any omissions, substitutions, defects and deficiencies in the work of the Contractor.

5. Receive and review all certificates of inspections, tests, and approvals required by the Contract Documents.

6. Check measurements of pay quantities for accuracy, as requested by the ITD, and prepare required documentation for processing of payment to the Contractor.

The frequency and scope of inspections will vary with the work activity being performed; however, the Sponsor shall perform inspection services in accordance with ITD's procedures, policies, directives and industry-accepted standards.

IV. *Material Testing*

This task includes all work to determine that the materials supplied and constructed by the Contractor meet the conditions set forth in the contract documents. All sampling and testing personnel working under this agreement must meet the requirements outlined in the Contract Administration Manual, Section 114, for testing and sampling which they perform. All samplers and testers must be accepted by the ITD before performing any work on this project. All testing must be performed at a laboratory qualified through the ITD Laboratory Qualification Program.

The Sponsor shall provide oversight and coordinate the activities of their staff which will include Sampler/Testers with the necessary WAQTC qualifications and skills to perform all associated tests. ITD will provide IA Inspectors and IA testing will be performed by ITD. Materials Verification Testing and inspection duties shall include, but not be limited to asphalt pavement, soils, aggregate, structural and non-structural concrete, conduit installation, incidental items and traffic control operations, and preparation of QC/QA data analysis and review. All work shall be performed in accordance with the project plans, special provisions, ITD Standard Specifications, ITD QA-SP, the ITD Quality Manual and other appropriate standards. The Sponsor will provide all sampling equipment, disposable molds for casting concrete cylinders, sample cartons, sample bags, and other expendable type testing supplies.

The Sponsor shall:

1. Perform project on-site sampling and testing of component materials and completed work items to verify that the materials and workmanship incorporated in each project are in substantial conformity with the plans, specifications and contract provisions. The Sponsor shall meet the minimum sampling frequencies and other provisions as contained in the contract documents, QA Special Provision, ITD Quality Manual, and as required due to project phasing, or other factors which could affect minimum testing frequencies.

2. Keep ITD informed about schedules for sampling and testing on each project and ensure that all documentation reports on sampling and testing are completed and submitted the same week the work is done or as otherwise directed.

3. Monitor the Contractor's Quality Control Plan pursuant to QC/QA Special Provisions. Insert the acceptance and verification testing results into the electronic QC/QA statistical analysis spreadsheet for aggregates and asphalt pavement pay items and forward this spreadsheet via email to the proper ITD representative.

4. Be responsible for transporting samples to be tested in an ITD laboratory or other laboratory to the appropriate laboratory.

5. The responsibility for control of concrete production is assigned to the Contractor. The Sponsor shall provide daily monitoring of the Contractor's Quality Control activities at the project site and perform acceptance sampling and testing at the specified frequency.

6. Evaluate and determine the acceptability of substitute or "or-equal" materials and equipment proposed by the Contractor. Make recommendations to the ITD for change orders before allowing any substitutes.

7. Compile and maintain in current status, the Materials Summary Log and applicable QC/QA data entry in accordance with the ITD Policy (MAP's Program).

V. Project Closeout

This task involves acquiring and preparing the necessary project closeout documents, which shall include all supporting records. The Sponsor shall:

1. Verify to ITD that all the necessary documents have been received for submission of contractor's affidavit of payment.

2. Receive bonds, certificates, or other evidence of insurance not previously submitted and required by the Contract Documents, including certificates of inspection, tests and approvals, shop drawings, samples, and the annotated record documents which are to be assembled by the Contractor in accordance with the Contract Documents to obtain final payment.

3. Promptly conduct an inspection after notice from the Contractor that the entire work is ready for its intended use, in the company of ITD and the Contractor, to determine if the work is Substantially Complete. If there are no objections from ITD and the Sponsor considers the work substantially complete, the Sponsor shall deliver a certificate of substantial completion to ITD and the Contractor.

4. Participate in a final inspection, to include representatives from ITD, to determine if the completed work by the contractor is acceptable so that the Sponsor may recommend in writing, final payment to the Contractor. Accompanying the recommendation for final payment, the Sponsor shall also provide a notice that the work is acceptable to the best of their knowledge, information and belief and based on the extent of the services provided under this agreement.

5. Prepare and furnish to ITD record plans showing appropriate record information based on project annotated documents received from the Contractor. Supply two (2) sets of red marked plans depicting all changes to the original contract will be supplied to ITD.

IDAHO FALLS

MEMORANDUM

FROM: Interdepartmental
DATE: Thursday, February 13, 2020
RE: E-Scooter/E-Bike Ordinance

Council Action Desired

☒ Ordinance ☐ Resolution ☐ Public Hearing

☐ Other Action (Approval, Authorization, Ratification, etc)

To approve the E-Scooter Ordinance amending Title 9 by the addition of Chapter 8, under a suspension of the rules requiring three complete and separate readings and request that it be read by title and published by summary (or take other action deemed appropriate).

Description, Background Information & Purpose

Please find attached an ordinance that provides comprehensive regulation of E-bikes and E-scooters within the City of Idaho Falls. This ordinance was drafted by several City departments including Police, Public Works, Community Development Services, Parks & Recreation, Legal Services, and the Mayor's Office of Economic Development.

Relevant PBB Results & Department Strategic Plan

☐ ☐ ☐ ☐ ☒ ☒ ☐ ☒

Encouraging E-scooter and E-bike operations follows the community results Idaho Falls seeks to achieve. Additional mobility options aids in the effort to be a livable community, and one that places value on transportation and safety.

Interdepartmental Coordination

The Police, Public Works, Community Development Services, and Parks & Recreation departments as well as the Mayor's Office of Economic Development have worked together on this ordinance.

Fiscal Impact

The anticipated cost of administering this ordinance is expected to be minor. A nominal Dockless Bikeshare Program registration fee will be assessed.

Legal Review

The ordinance was drafted and reviewed by the Legal Services Department.

ORDINANCE NO. 2020-

AN ORDINANCE OF THE CITY OF IDAHO FALLS, IDAHO, AMENDING CITY CODE TITLE 9 BY THE ADDITION OF CHAPTER 8 TO PROVIDE COMPREHENSIVE REGULATION OF E-BIKES AND E-SCOOTERS WITHIN THE CITY; PROVIDING SEVERABILITY, CODIFICATION, PUBLICATION BY SUMMARY, AND ESTABLISHING EFFECTIVE DATE.

WHEREAS, technology has developed dockless E-bikes and E-scooters so that they are popular and useful within an urban environment, such as the City and its downtown business district; and

WHEREAS, the "sharing economy" promotes and sustains Dockless Bikeshare Programs; and

WHEREAS, the City desires to incorporate E-bike and E-scooter uses and programs within the City's transportation system; and

WHEREAS, the Council wishes to establish a mutually beneficial relationship with companies providing shared E-bike and E-scooter services in the City, as well as with the businesses in the City that market E-bikes and E-scooters; and

WHEREAS, the City agrees that maintaining our clean energy production, improving energy efficiency, electrifying vehicles, and expanding electric vehicle infrastructure will continue to have many positive impacts on our residents by conserving resources and encouraging further economic development; and

WHEREAS, E-bike and E-scooter technology and shared economy systems are best regulated with a comprehensive plan to allow uses of E-bikes and E-scooters in City transportation corridors and on public properties within the City; and

WHEREAS, the Council believes that this Ordinance accomplishes the goals and needs of cities regarding safety, convenience, availability, predictability, and use.

NOW, THEREFORE, BE IT ORDAINED BY THE MAYOR AND COUNCIL OF THE CITY OF IDAHO FALLS, IDAHO, THAT:

SECTION 1. Title 9, Chapter 8, of the City Code of the City of Idaho Falls, Idaho, is hereby added as follows:

9-8-1: DEFINITIONS. The following terms, whenever used in this Chapter, shall have the meaning ascribed below:

ABANDONED E-BIKE OR E-SCOOTER. E-bike(s), E-scooter(s), or any part thereof, left or

remaining unattended or unused in a public place for forty-eight (48) consecutive hours or longer after it is tagged with a notice of intention to abate.

ALLOWED USE AREA. A section of the City, designated by “geofencing” technology or otherwise, where dockless bikeshare programs utilizing E-bikes and E-scooters may operate.

BICYCLE PATH. A travel way, as defined in Title 9, Chapter 7 of this Code, which shall also accommodate operation of E-bikes and E-scooters.

BICYCLE ROUTE. A travel way, as defined in Title 9, Chapter 7 of this Code, which shall also accommodate operation of E-bikes and E-scooters.

CROSSWALK. (a) That part of a highway at an intersection included within the connections of the lateral lines of the sidewalks on opposite sides of the highway measured from the curbs or in the absence of curbs, from the edges of the traversable highway; and in the absence of a sidewalk on one (1) side of the highway, that part of a highway included within the extension of the lateral lines of the existing sidewalk at right angles to the centerline.

(b) Any portion of a highway at an intersection or elsewhere distinctly indicated for pedestrian crossing by lines or other markings on the surface.

DOCKLESS BIKESHARE PROGRAM. A person or entity that provides E-bikes and E-scooters for rent to the general public within a geographical area or City including rental of E-bikes or E-scooters controlled by a computer program or application (such as a smart phone app) and where individual units can be located by GPS.

ELECTRIC ASSISTED BICYCLE (E-bike). A bicycle equipped with fully operable pedals and an electric motor of less than seven hundred fifty (750) watts and that meets one (1) of the following requirements:

(a) "Class 1 electric-assisted bicycle". An electric-assisted bicycle equipped with a motor that provides assistance only when the rider is pedaling and ceases when the rider stops pedaling or when the bicycle reaches the speed of twenty (20) miles per hour.

(b) "Class 2 electric-assisted bicycle". An electric-assisted bicycle equipped with a motor that may be used exclusively to propel the bicycle and that is not capable of providing assistance when the bicycle reaches the speed of twenty (20) miles per hour.

(c) "Class 3 electric-assisted bicycle". An electric-assisted bicycle equipped with a motor that provides assistance only when the rider is pedaling and ceases when the rider stops pedaling or when the bicycle reaches the speed of twenty-eight (28) miles per hour.

An E-bike, as defined in this Chapter, is not a “motor vehicle”, as defined in Idaho Code Title 49, Chapter 1.

ELECTRIC ASSISTED SCOOTER (E-Scooter). A two (2) wheeled device that has handlebars, a floorboard designed to be stood upon when riding and an electric motor that: (a) is not operated at a speed of more than twenty (20) miles per hour in City limits; (b) gives the operator the option to propel the device exclusively under human power without the assistance of the motor, and (c) disengages or ceases to function when the device's brakes are applied.

An E-scooter, as defined in this Chapter, is not a “motor vehicle”, as defined in Idaho Code Title Code Title 49, Chapter 1.

OBSTRUCTIVE BICYCLE, E-BIKE, OR E-SCOOTER. E-bike(s), E-scooter(s), or any part thereof, left in a public place that obstructs or impedes vehicular or pedestrian traffic.

OPERATOR. A person or persons in exclusive control of an E-bike or E-scooter and using the device for transportation.

PEDESTRIAN. Any person afoot and any person operating a wheelchair or a motorized wheelchair or an “electric personal assistive mobility device,” as that term is defined in Idaho Code Title 49, Chapter 1.

PUBLIC PLACE. Any publicly owned or operated property, including, but not limited to, roadways, highways, roadways, sidewalks, streets, alleys, rights-of-way, bicycle paths, bicycle routes, parks, public parking lots, and plazas located within the City’s jurisdictional limits.

RIDER. A person or persons using an E-bike or E-scooter for transportation, other than the operator.

9-8-2: TRAFFIC LAWS APPLY TO PERSONS RIDING E-BIKES AND E-SCOOTERS.

A. Every person, regardless of age, who operates an E-bike or E-scooter, as defined in this Chapter, upon a public place in the City shall be granted the same rights and shall be subject to the same responsibilities applicable to a motor vehicle operator by Idaho Code. Provisions of this Chapter not in conflict with Title 49, Idaho Code also apply, except to the extent those laws and ordinances by their very nature can have no application to E-bikes or E-scooters. Any conveyance not meeting the definition of E-bike or E-scooter shall be subject to the respective regulations of this Code and Idaho Code.

B. Exemptions. Any Idaho peace officer, as defined in Idaho Code Section 19-5101(d), operating an E-bike or E-scooter in the course and scope of their official duties is exempt from the requirements of Subsection A of this Section, if the E-bike or E-scooter is being operated under any of the following circumstances:

1. When responding to a 9-1-1 or other emergency call;
2. While en route to or engaged in rescue operations; or
3. While actively pursuing an actual or suspected violator of the law.

9-8-3: REQUIRED EQUIPMENT. No person shall operate an E-bike or E-scooter without the following features:

A. Brakes capable of causing the E-bike or E-scooter to stop within twenty-five feet (25') at ten (10) miles per hour on dry, level, clean pavement; and

B. A bell or other audible warning device capable of being heard at a distance of at least one hundred feet (100') away, except that no E-bike or E-scooter shall be equipped with nor shall any person use upon an E-bike or E-scooter any siren or whistle; and

C. A red reflector on the rear visible from a distance of three hundred feet (300') when directly in front of the lawful upper beams of a motor vehicle, and a forward-facing, white electric light visible from a distance of at least five hundred feet (500') in front of the E-bike or E-scooter. Any E-bike or E-scooter equipped with a generator-powered light that is unlit when the E-bike or E-scooter is stopped shall also have a front-facing white or yellow reflector visible at least five hundred feet (500’) in front of the E-bike or E-scooter when directly in front of the lawful upper beams of a motor vehicle.

9-8-4: OPERATING E-BIKES OR E-SCOOTERS.

A. No person riding or operating an E-bike or E-scooter shall place themselves other than upon or astride a permanent and regular seat or floorboard attached thereto.

B. No E-bike or E-scooter shall be used to carry more than one (1) person at one time, unless the vehicle is specifically designed, manufactured, or equipped to carry more than one (1) person safely.

D. Every person operating an E-bike or E-scooter shall keep at least one (1) hand on the handlebars at all times while the E-bike or E-scooter is in motion and shall not use the E-bike or E-scooter to transport any items or luggage other than with a backpack or other such device that allows the operator to carry something without actively holding it in the hands or arms.

9-8-5: CLINGING TO MOTOR VEHICLES. Persons operating E-bikes or E-scooters shall not hold on to, cling to, or attach themselves or such E-bikes or E-scooters to a moving motor vehicle.

9-8-6: RIDING ON ROADWAYS. No person shall operate an E-bike or E-scooter on a roadway against the flow of motorized vehicular traffic, except where permitted by official signs or pavement markings. The operator of an E-bike or E-scooter traveling at a rate of speed that delays a vehicle or vehicles following in the same lane shall be required, except where unlawful

or unsafe for the following vehicle to pass, to move as far to the right of the traveled roadway, or to the left where the E-bike or E-scooter is in the left lane of a one-way roadway, as is safe under the conditions then existing. When an operator is within fifty feet (50') of an intersection, they shall not be required to move to the right or left until they have moved through the intersection.

9-8-7: OPERATING UPON SIDEWALKS AND UPON AND WITHIN CROSSWALKS.

A. An E-bike or E-scooter may be operated upon a sidewalk and upon and within a crosswalk, except when, based upon existing conditions, operating upon a sidewalk or crosswalk constitutes a public nuisance, in which case the operator of an E-bike or E-scooter shall dismount and walk the E-bike or E-scooter until safe riding conditions exist.

B. Pedestrians shall have primacy of use of sidewalks and crosswalks above operators of E-bikes or E-scooters. Any operator of an E-bike or E-scooter riding upon a sidewalk, or crosswalk shall yield the right-of-way to any pedestrian and shall give an audible warning before overtaking and passing such pedestrian. The audible warning may be given by the voice or by a bell or other lawful device capable of giving an audible signal to the person or persons being overtaken and passed.

C. Any operator of an E-bike or E-scooter riding upon a sidewalk, or crosswalk shall have all the rights and duties applicable to a pedestrian under the same circumstances.

D. Any operator of an E-bike or E-scooter traveling on the sidewalk shall not suddenly leave a curb or other place of safety and move into the path of a vehicle that is so close as to constitute an immediate hazard.

9-8-8: E-BIKE AND E-SCOOTER PARKING. E-bikes, or E-scooters shall not be parked in such a manner as to obstruct or impede the movement of pedestrians, motor vehicles, other bicycles, E-bikes, or E-scooters, or to cause damage to trees, shrubs, streetlights, benches, or other affixed public property.

9-8-9: RECKLESS OR INATTENTIVE OPERATION. It shall be unlawful for any operator to use an E-bike or E-scooter recklessly, inattentively, carelessly, heedlessly or at a greater speed than reasonable or prudent, under circumstances existing, on any public place.

9-8-10: MAXIMUM POSTED SPEED LIMITS. All E-bike or E-scooter operators shall obey all posted regulations, including maximum speed limits.

9-8-11: REMOVAL OF IDENTIFICATION TAG. It shall be unlawful for any person to willfully remove, deface, or destroy any E-bike or E-scooter identification tag issued by the City, other than following the lawful sale or gift of such E-bike or E-scooter to another.

9-8-12: NO E-BIKES OR E-SCOOTERS AT ZOO. It shall be unlawful for E-bikes or E-scooters to operate in the Idaho Falls Zoo at Tautphaus Park.

9-8-13: DOCKLESS BIKESHARE PROGRAM BUSINESS LICENSE AND E-BIKE AND E-SCOOTER REGISTRATION.

A. The City, as a matter of public policy, requires all Dockless Bikeshare Programs doing business in City limits to have a City Dockless Bikeshare Program business license and to have all of their E-bikes and E-scooters registered with and tagged by the City Police Department ("IFPD") or its designated agents. The purpose of such Dockless Bikeshare Program business licensing and E-bike and E-scooter registration is to assist the City, or other public safety agencies, in recovering E-bikes or E-scooters should they be stolen or otherwise misplaced.

B. Every Dockless Bikeshare Program wishing to do business in the City shall obtain and retain a Dockless Bikeshare Program business license prior to such Program's operation in the City. Such license shall be issued annually. Failure to hold a current Dockless Bikeshare Program business license, or to renew an expired license within ten (10) days after its expiration, shall result in the immediate impounding of all Dockless Bikeshare Program's E-bikes and E-scooters until such license deficiency is remedied. The Dockless Bikeshare Program shall be liable for the daily expense of impounding the E-bikes and E-scooters until Dockless Bikeshare Program license annual renewal or the sale of the impounded E-bikes or E-scooters by the City.

C. Every Dockless Bikeshare Program shall register every E-bike and E-scooter by filing with the City the name and address of the owner, together with a complete description of the E-bike or E-scooter on forms provided by or made available through the City. The fee for said registration shall be established from time to time by Resolution of the Council. The registration fee applies for the entire period the licensed registrant owns the licensed device. Registration shall be serially numbered and kept on file by the City. Upon such registration, the City or its designee shall cause an identification tag to be affixed to each registered E-bike or E-scooter which shall be serially numbered to correspond with the registration number. Such identification tag shall remain affixed to the E-bike or E-scooter unless removed by IFPD for re-tagging upon re-registration.

D. It shall be unlawful for a Dockless Bikeshare Program to fail to register or to willfully remove, deface, or destroy any E-bike or E-scooter identification tag issued by the City.

9-8-14: DOCKLESS BIKESHARE PROGRAM REGULATIONS.

A. Each Dockless Bikeshare Program doing business in the City shall, under the direction and with the permission of the Parks and Recreation Department and Public Works Department, establish allowed use areas and designate locations within allowed use areas for E-bikes and E-scooters to be returned after daily collection and recharging.

B. Dockless Bikeshare Programs shall ensure any E-bikes and E-scooters belonging to the Program found beyond the allowed use areas are collected and relocated within one (1) hour of

being found beyond an allowed use area during business hours (8 a.m. to 5 p.m. local time), and within two (2) hours at all other times.

C. An E-bike or E-scooter belonging to a Dockless Bikeshare Program shall prominently display the 24/7 contact phone number of the Dockless Bikeshare Program to which it belongs in a conspicuous and permanent location on the frame of the E-bike or E-scooter. Anyone shall be able to call the number, whether or not the caller is a current customer of the Dockless Bikeshare Program.

D. All E-bikes and E-scooters operating in the City pursuant to a Dockless Bikeshare Program license shall operate with built-in computer programming that prevents the E-bike or E-scooter from reaching speeds above thirty (30) miles per hour.

9-8-15: NOTICE OF VIOLATION AND PROCEDURES.

Upon observing any violation of the provisions of this Chapter, the City is authorized to serve a notice of violation by personally serving the person violating the provisions of this Chapter with a citation.

9-8-16: LABELING REQUIREMENT. Dockless Bikeshare Program, Licensees, shall provide information in legible type permanently affixed in a prominent location on each E-bike or E-scooter or the E-bike or E-scooter shall not be permitted on a public place within the City. Such information shall include the address of the Licensee's webpage containing a copy of this Chapter and the phrases "Do Not Ride on Sidewalks in Central Downtown Area"; "Yield to Pedestrians"; and "Obey Posted Speeds".

9-8-17: UNITED STATES CONSUMER PRODUCT SAFETY COMMISSION COMPLIANCE. All E-bikes and E-scooters shall comply with the relevant equipment and manufacturing requirements adopted by the United States Consumer Product Safety Commission.

9-8-18: REMOVING E-BIKES AND E-SCOOTERS, NUISANCE ABATEMENT.

A. Nuisance Declared. One (1) or more abandoned or obstructive E-bikes, E-scooters, or any part thereof, in public places promotes urban blight, invites theft and vandalism, and creates a hazard to the general public's health, safety, and welfare, and thereby constitutes a public nuisance. Abandoned or obstructive E-bikes, E-scooters, or any part thereof shall be abated in accordance with this Chapter.

B. Prohibited Behavior. No person shall abandon an E-bike, E-scooter, or any part thereof in a public place. No person shall leave an E-bike or E-scooter, or any part thereof, in a manner that obstructs use of a public place.

C. Enforcement. In accordance with this Chapter, the City, IFPD, and designee is authorized to mark abandoned or obstructive E-bikes, E-scooters, or any part thereof, for abatement by removal and to order the removal and impoundment of such abandoned or obstructive E-bikes, E-scooters, or any part thereof, from a public place.

D. Notice Of Intention To Remove Abandoned E-Bikes, E-Scooters, Or Any Part Thereof. All notices of intention to remove shall be firmly and conspicuously affixed to the abandoned and/or obstructive E-bike, E-scooter, or any part thereof. The notice of intention to remove shall contain: the name of the officer who prepared the notice; the name of the agency employing the officer; the date and time the notice was posted; the date and time after which the E-bike, E-scooter, or any part thereof shall be removed; and the contact information and address for the location where the E-bike, E-scooter, or any part thereof, shall be impounded, and information on how to request a post-storage administrative review.

E. Notice Of Removal Of Obstructive E-Bike, E-Scooter, Or Any Part Thereof. All notices of removal of an obstructive E-bike, E-scooter, or any part thereof shall be firmly and conspicuously posted as near as possible to the location from where the obstructive E-bike, E-scooter, or part was removed. The notice of removal shall contain the name of the officer who prepared the notice; the name of the agency employing the officer; the date and time the E-bike, E-scooter, or part was removed, the reason for the removal, the contact information and address for the location where the obstructive E-bike, E-scooter, or part are impounded, and information on how to request an administrative review.

F. Abatement Of Abandoned E-Bike, E-Scooter, Or Any Part Thereof. Not less than forty-eight (48) hours after the posting of a notice of intention to abate by removal, the City may remove and impound an abandoned E-bike, E-scooter, or any part thereof.

G. Storage. All abated abandoned and obstructive E-bikes, E-scooters, or parts shall be stored and disposed of by the City in accordance with Idaho Code. Reasonable storage fees, in an amount established from time to time by Resolution of the Council, shall be charged to the owner of the abated E-bike, E-scooter, or any part thereof, to cover the costs of removal, impoundment, storage, recordkeeping, and other associated costs. Owners shall be required to pay all storage fees in full prior to the release of E-bikes, E-scooters, or any parts thereof.

H. Post-Storage Administrative Review. Whenever an abandoned or obstructive E-bike, E-scooter, or any part thereof, is abated and impounded by the City, the owner of such property shall be provided with the opportunity for a post-storage administrative review to determine the validity of the removal and storage of such property. In order for an owner to receive a post-storage administrative review, the owner shall request the review in writing from the City within fourteen (14) business days of the posting of the notice of intention to abate. The City shall conduct the post-storage review within forty eight (48) hours of the request, excluding weekends and holidays. Failure by the owner to request or to attend a review shall validate the impoundment and storage of that owner's E-bike, E-scooter, or part thereof. If it is determined at

the review that there was not reasonable cause to deem the abated E-bike, E-scooter, or any part thereof, abandoned or obstructive, the City shall be responsible for payment of all storage fees.

I. Disposal. Any E-bike, E-scooter, or part thereof that is abated and impounded under this Chapter and that is not claimed and redeemed by its owner within the time limits set forth in Idaho Code shall become the property of the City and shall be sold. Proceeds, if any, from the sale of abated E-bikes, E-scooters, or parts thereof, shall be applied first to all outstanding storage fees and any expenses related to the sale of such property.

9-8-19: LIABILITY INSURANCE. Every Dockless Bikeshare Program operating in the City shall carry liability insurance naming the City as an insured, with a minimum one million dollars ($1,000,000) annual coverage policy. Each Dockless Bikeshare Program operating in Idaho Falls also indemnifies and agrees to hold harmless the City for damages in connection with the unsafe operation of any E-bike or E-scooter owned by such Dockless Bikeshare Program.

9-8-20: PENALTIES. Unless otherwise specifically provided in this Chapter, any person who violates any provision of this Chapter shall be deemed guilty of an infraction and upon conviction shall be punishable by a civil infraction penalty, as established from time to time by Resolution of the Council.

SECTION 2. Savings and Severability Clause. The provisions and parts of this Ordinance are intended to be severable. If any section, sentence, clause, or phrase of this Ordinance should be held to be invalid or unconstitutional by a court of competent jurisdiction, such invalidity or unconstitutionality shall not affect the validity or constitutionality of any other section, sentence, clause, or phrase of this Ordinance.

SECTION 3. Codification Clause. The City Clerk is instructed to immediately forward this Ordinance to the codifier of the official municipal code for proper revision of the Code.

SECTION 4. Publication. This Ordinance, or a summary thereof in compliance with Idaho Code, shall be published once in the official newspaper of the City, and shall take effect immediately upon its passage, approval, and publication.

SECTION 5. Effective Date. This Ordinance shall be in full force and effect from and after its passage, approval, and publication.

PASSED by the City Council and APPROVED by the Mayor of the City of Idaho Falls, Idaho, this _____ day of _____, 2020.

CITY OF IDAHO FALLS, IDAHO

_____

REBECCA L. NOAH CASPER, MAYOR

ATTEST:

_____

KATHY HAMPTON, CITY CLERK

(SEAL)

STATE OF IDAHO)
) ss:
County of Bonneville)

I, KATHY HAMPTON, CITY CLERK OF THE CITY OF IDAHO FALLS, IDAHO, DO HEREBY CERTIFY:

> That the above and foregoing is a full, true and correct copy of the Ordinance entitled, "AN ORDINANCE OF THE CITY OF IDAHO FALLS, IDAHO, AMENDING CITY CODE TITLE 9 BY THE ADDITION OF CHAPTER 8 TO PROVIDE COMPREHENSIVE REGULATION OF E-BIKES AND E-SCOOTERS WITHIN THE CITY; PROVIDING SEVERABILITY, CODIFICATION, PUBLICATION BY SUMMARY, AND ESTABLISHING EFFECTIVE DATE."

(SEAL) _____

KATHY HAMPTON, CITY CLERK

IDAHO FALLS

MEMORANDUM

FROM: Brad Cramer, Community Development Services Director

DATE: Thursday, February 6, 2020

RE: Final Plat and Reasoned Statement of Relevant Criteria and Standards, Jackson Hole Junction Subdivision, 1st Amended

Council Action Desired

☐ Ordinance ☐ Resolution ☐ Public Hearing

☒ Other Action (Approval, Authorization, Ratification, etc)

1. Approve the Final Plat for Jackson Hole Junction Subdivision 1st Amended, and give authorization for the Mayor, City Engineer, and City Clerk to sign said Final Plat.

2. Approve the Reasoned Statement of Relevant Criteria and Standards for the Final Plat for Jackson Hole Junction Subdivision 1st Amended, and give authorization for the Mayor to execute the necessary documents.

Description, Background Information & Purpose

For consideration is the application for a Final Plat for Jackson Hole Junction Subdivision 1st Amended. The Planning and Zoning Commission considered this item at its February 4, 2020, meeting and recommended approval of the plat by unanimous vote. Staff concurs with this recommendation. The item is now being submitted to the Mayor and Council for consideration.

Relevant PBB Results & Department Strategic Plan

☐ ☒ ☐ ☐ ☐ ☐ ☐ ☐

Because the Subdivision Ordinance requires final plats to be approved if they are consistent with the preliminary plat and if they meet all requirements of the Subdivision Ordinance, and

because this plat meets those requirements, approval of the plat is consistent with the goal for Good Governance.

Interdepartmental Coordination

Staff from Planning, Engineering, Water, Sewer, Streets, Sanitation, Fire Prevention, Power, and Survey have reviewed the Final Plat.

Fiscal Impact

NA

Legal Review

NA

Final Plat

Jackson Hole Junction, 1st Amended

Legend

- Site
- City Limits
- Area of Impact

Overlays

- PT
- PT&T-1
- PUD
- T-1
- T-2
- RE
- RP
- R1
- R2
- TN
- RMH
- R3
- R3A
- PB
- DT
- CC
- LC
- HC
- R&D
- LM
- I&M
- P

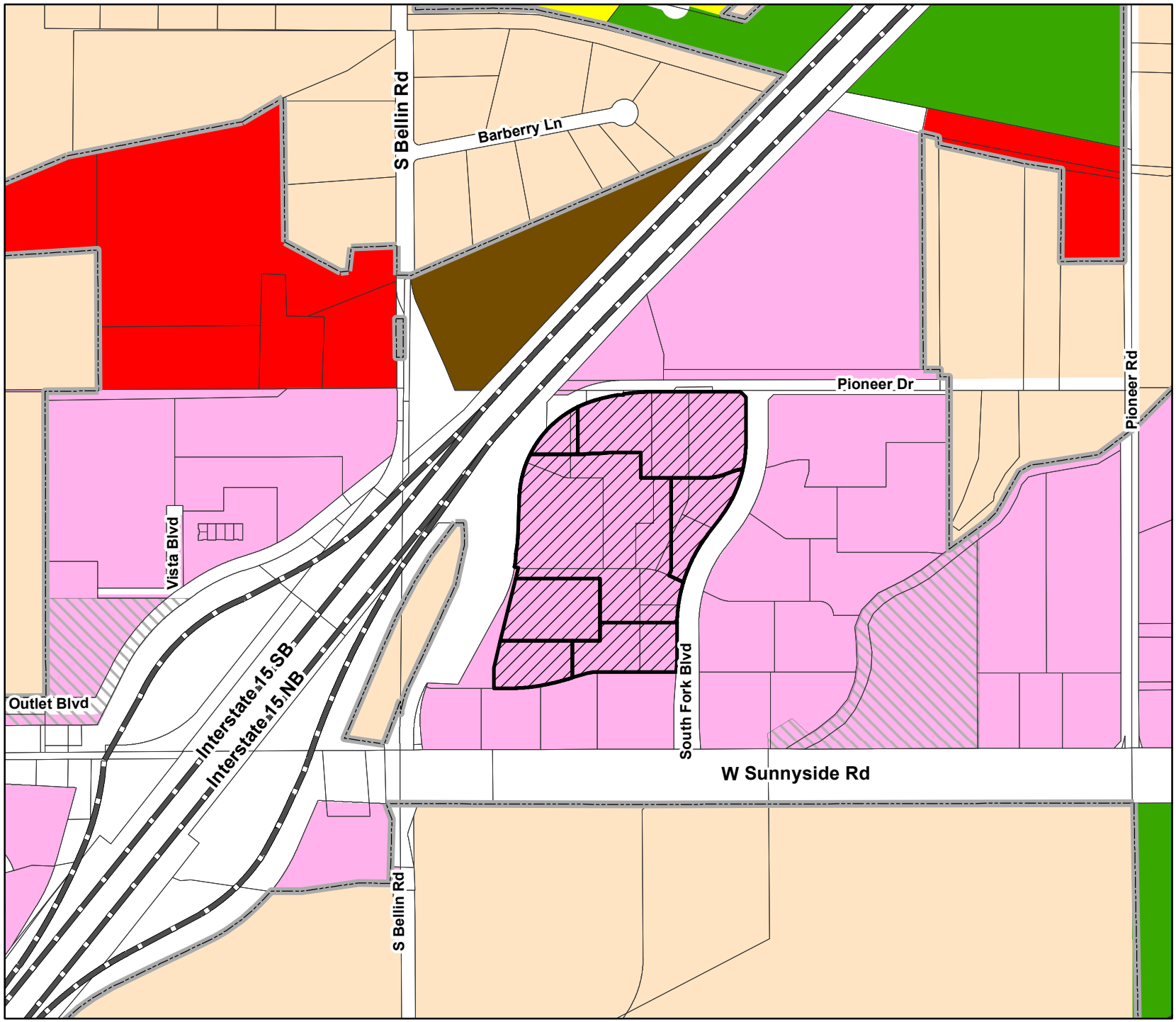

IDAHO FALLS

Planning Division
City Annex Building
680 Park Ave.
Idaho Falls, ID 83402
(208) 612-8276

N

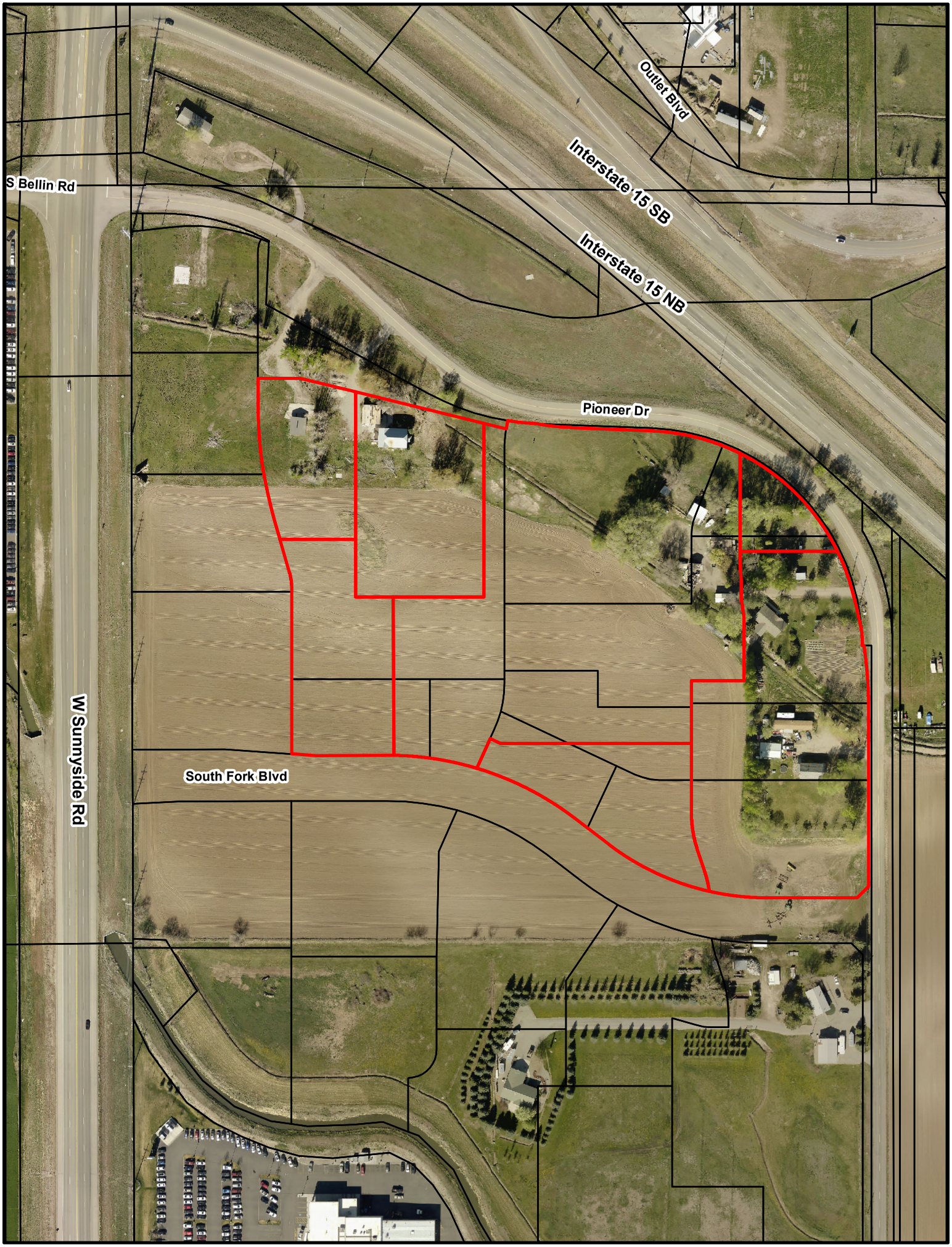
S Bellin Rd
Outlet Blvd
Interstate 15 SB
Interstate 15 NB
Pioneer Dr
W Sunnyside Rd
South Fork Blvd

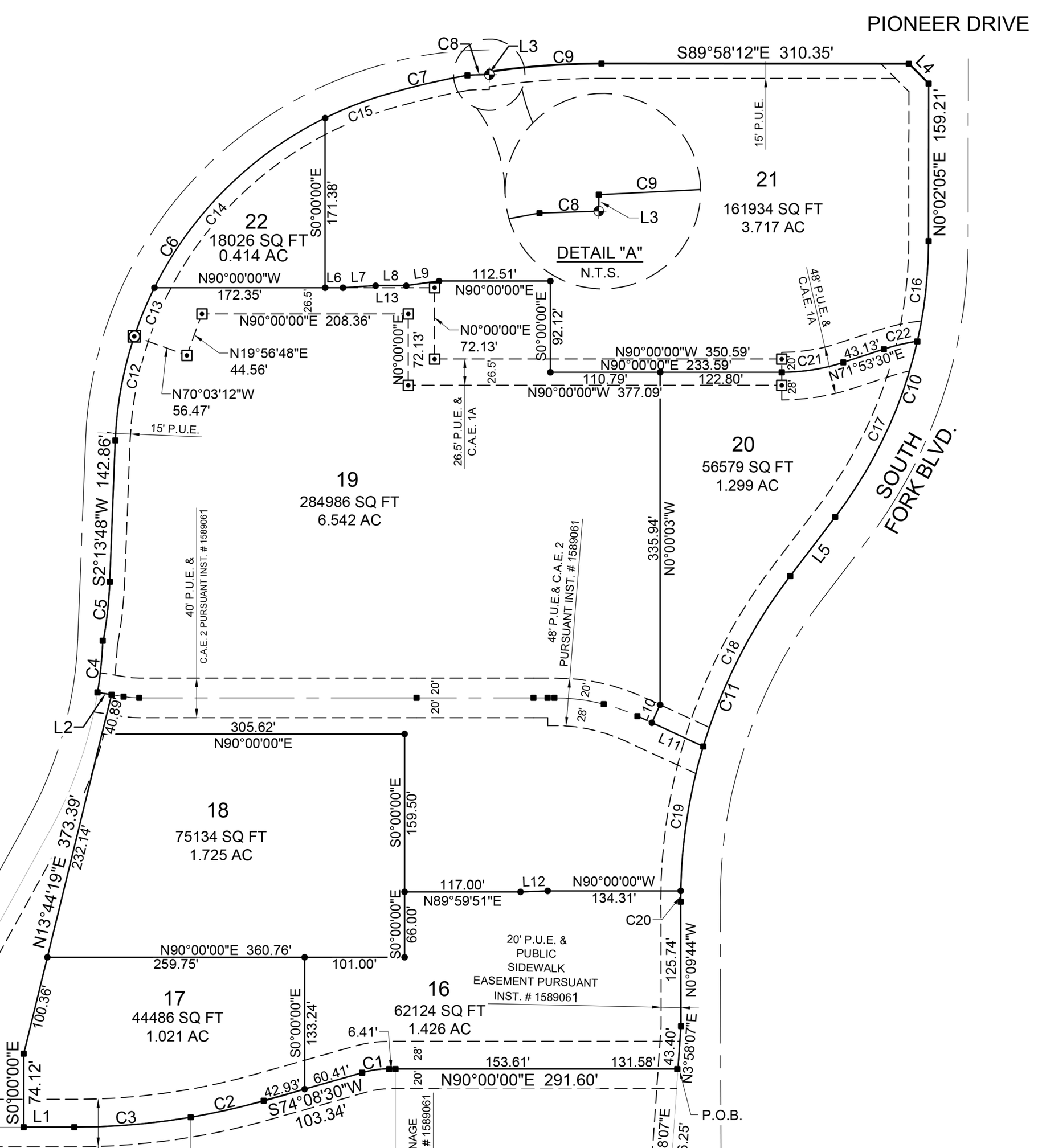
PIONEER DRIVE
S89°58'12"E 310.35'
N0°02'05"E 159.21'
15' P.U.E.
21
161934 SQ FT
3.717 AC
DETAIL "A"
N.T.S.
22
18026 SQ FT
0.414 AC
S0°00'00"E 171.38'
N90°00'00"W 172.35'
112.51'
N90°00'00"E
N90°00'00"E 208.36'
N0°00'00"E 72.13'
S0°00'00"E 92.12'
N19°56'48"E 44.56'
N70°03'12"W 56.47'
N90°00'00"W 350.59'
N90°00'00"E 233.59'
110.79'
122.80'
N90°00'00"W 377.09'
43.13'
N71°53'30"E
48' P.U.E. & C.A.E. 1A
26.5' P.U.E. & C.A.E. 1A
15' P.U.E.
142.86'
S2°13'48"W
19
284986 SQ FT
6.542 AC
20
56579 SQ FT
1.299 AC
SOUTH FORK BLVD.
40' P.U.E. & C.A.E. 2 PURSUANT INST. # 1589061
48' P.U.E.& C.A.E. 2 PURSUANT INST. # 1589061
335.94'
N0°00'03"W
40.89'
305.62'
N90°00'00"E
18
75134 SQ FT
1.725 AC
S0°00'00"E 159.50'
373.39'
232.14'
N13°44'19"E
117.00'
N89°59'51"E
N90°00'00"W 134.31'
S0°00'00"E 66.00'
N90°00'00"E 360.76'
259.75'
101.00'
20' P.U.E. & PUBLIC SIDEWALK EASEMENT PURSUANT INST. # 1589061
125.74'
N0°09'44"W
17
44486 SQ FT
1.021 AC
S0°00'00"E 133.24'
16
62124 SQ FT
1.426 AC
6.41'
153.61'
131.58'
43.40'
N3°58'07"E
N90°00'00"E 291.60'
100.36'
S0°00'00"E 74.12'
60.41'
42.93'
S74°08'30"W 103.34'
P.O.B.
L1
C3
C2
C1
C20
C21
C22
L2
L3
L4
L5
L6
L7
L8
L9
L10
L11
L12
L13
C4
C5
C6
C7
C8
C9
C10
C11
C12
C13
C14
C15
C16
C17
C18
C19

Final Plat

Jackson Hole Junction, 1st Amended

Legend

Site

Airport Overlay Zone

- No Development
- Limited Development
- Limited Development Approach Surface
- Controlled Development
- Controlled Development Approach Surface
- Approach Surface

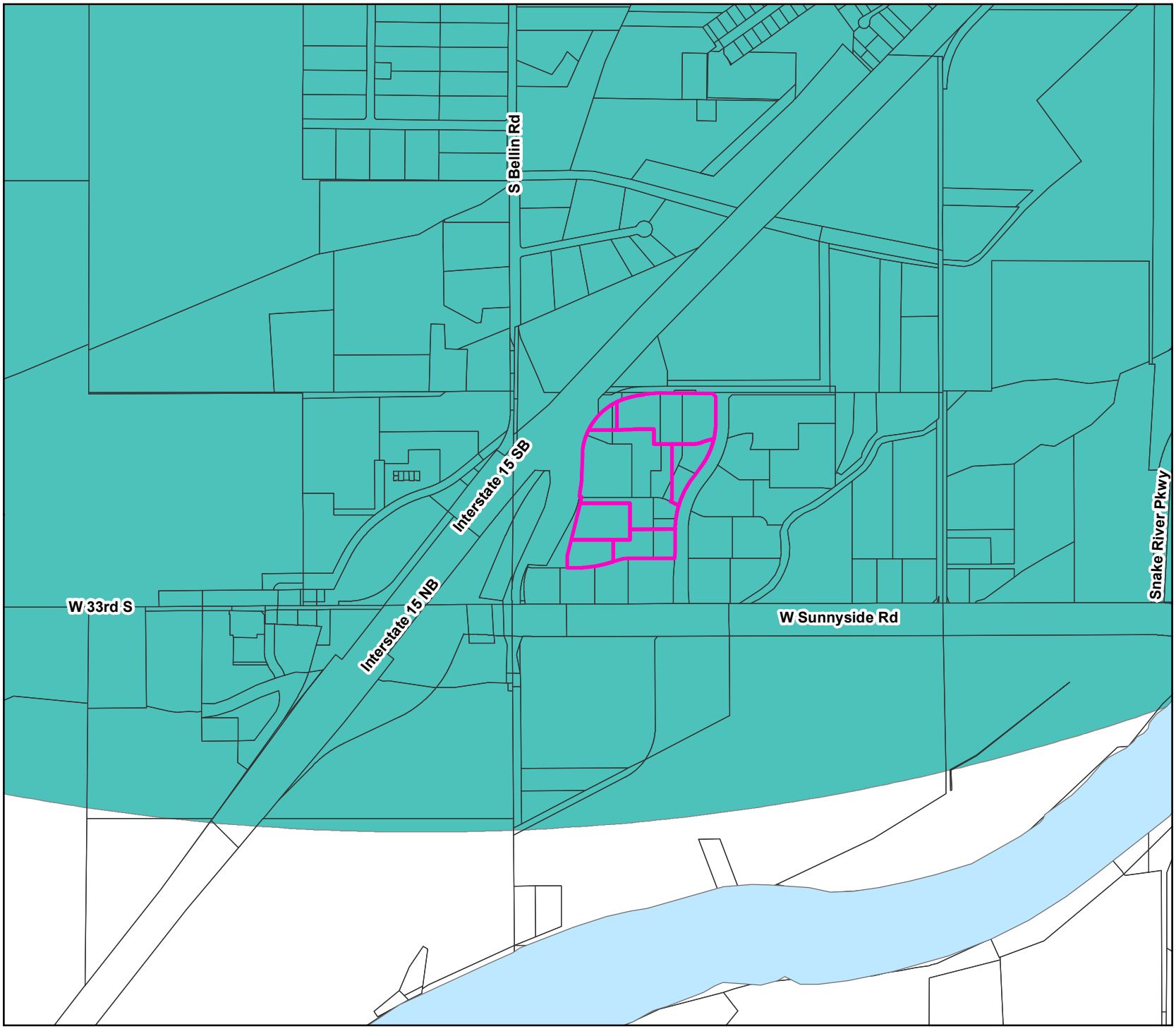

IDAHO FALLS

Planning Division
City Annex Building
680 Park Ave.
Idaho Falls, ID 83402
(208) 612-8276

N

IDAHO FALLS PLANNING AND ZONING COMMISSION
STAFF REPORT
Final Plat
Jackson Hole Junction 1st Amended
February 4, 2020

IDAHO FALLS
Community Development Services

Applicant: Horrocks Engineering

Location:
Generally south and east of Interstate 15, west of Pioneer Rd., and north of W Sunnyside Rd.

Size: Approx. 16.14 acres
Buildable Lots: 6
Common Lots: 1

Existing Zoning:
Site: HC
North: HC
South: HC
East: HC
West: HC

Existing Land Uses:
Site: Undeveloped lots
North: Ag
South: Undeveloped lots
East: Undeveloped lots
West: Street ROW & Developing lots

Future Land Use Map:
Commercial

Attachments:
1. Zoning Map
2. Comp Plan
3. Aerials
4. Airport Maps
5. Plat
6. Photos

Requested Action: To **recommend** to the Mayor and City Council approval of the final plat for Jackson Hole Junction 1st Amended.

Staff Comments: The property was platted in 2018. The Planning Commission has reviewed this area previously in a different configurations. The proposed layout is similar to the initial layout but has been reconfigured to accommodate Future development. The proposed plat includes 6 commercial lots and one common lot. Modifications to the lot boundaries will continue to remain fitting within the recently constructed street network.

Main access to the development will come from Sunnyside Road linking to South Fork Boulevard and Pioneer Drive.

The proposed development supports many Comprehensive Plan Polices as noted in this report.

Staff Recommendation: Staff has reviewed the final plat and finds that it complies with the subdivision ordinance. Staff recommends approval of the plat.

Subdivision Ordinance: Boxes: with an "X" indicated compliance with the ordinance

REQUIREMENTS	Staff Review
Building envelopes sufficient to construct a building.	X
Lot dimensions conform to the minimum standards of Zoning Ordinance.	X
Lots have full frontage on, and access to, a dedicated street.	X
Residential lots do not have direct access to arterial streets.	X
Direct access to arterial streets from commercial or industrial lots shall be permitted only where it can be demonstrated that: 1) The direct access will not impede the flow of traffic on the a1terial or otherwise create an unsafe condition; 2) There is no reasonable alternative for access to the a1terial via a collector street; 3) There is sufficient sight distance along the arterial from the proposed point of access; 4) The proposed access is located so as not to interfere with the safe and efficient functioning of any intersection; and 5) The developer or owner agrees to provide a11 improvements, such as turning lanes or signals, necessitated for the safe and efficient uses of the proposes access.	NA
Adequate provisions shall be made for soil preservation, drainage patterns, and debris and waste disposal and collection.	X
Sidelines of lots shall be at, or near, right angles or radial to the street lines. All corner lots shall have a minimum radius of twenty feet on the property line.	X
All property within the subdivision shall be included within a lot or area dedicated for public use.	X
All corner lots zoned RP through R3, inclusive, shall be a minimum of ten percent larger in area than the average area of all similarly zoned lots in the plat or subdivision under consideration.	NA
All major streets in subdivision must conform to the major street plan of the City, as set forth in Comprehensive Plan.	X
The alignment and width of previously platted streets shall be preserved unless topographical conditions or existing buildings or structures required otherwise.	X
Residential lots adjoining arterial streets shall comply with: 1) Such lots shall have reverse frontage on the arterial streets, 2) such lots shall be buffered from the a1terial street by any effective combination of the following: lot depth, earth berms, vegetation, walls or fences, and structural soundproofing, 3) Minimum lot depth shall be 150ft except where the use of berms, vegetation, and structures can be demonstrated to constitute an effective buffer, 4) Whenever practical, existing roadside trees shall be saved and used in the a1terial buffer, 5) Parking areas shall be used as part of the arterial buffer for high density residential uses, 6) Annexation and development agreement shall include provisions for installation and continued maintenance of arterial buffers.	NA
Planning Director to classify street on basis of zoning, traffic volume, function, growth, vehicular & pedestrian safety, and population density.	Existing Streets: Pioneer Drive South Fork Boulevard

Comprehensive Plan Policies:

Cluster community commercial centers and highway commercial rather than encourage strip commercial along arterial streets. (p.48)

Access to commercial properties shall be designed to minimize disruptive effects on traffic flow. (p.49)

Encourage development in areas served by public utilities or where extensions of facilities are least costly. (p. 67)

Limit access to arterial streets and section line roads. Access management is a process to provide access to adjacent land uses while preserving the safety, capacity, and speed of the arterial street (p.80)

Zoning:

HC Highway and General Commercial Zone. This zone provides a commercial zone for retail and service uses serving the traveling public. Characteristics of the Zone are buildings set back from the right-of-way line to promote safety on the highway and maintain maximum use of highway right-of-way for travel purposes, and a wide variety of architectural forms and shapes. This Zone should be located at specific locations along highways leading into the City.

11-2-4: ALLOWED USES IN COMMERCIAL ZONES.

Table 11-2-2: Allowed Uses in Commercial Zones

P = permitted use. C_1 = administrative conditional use. C_2 = Planning Commission conditional use. C_3 = City Council conditional use. A blank denotes a use that is not allowed in that zone.

*Indicates uses that are subject to specific land use provisions set forth in the Standards for Allowed Land Uses Section of this Chapter.

	Commercial				
Proposed Land Use Classification	**PB**	**CC**	**LC**	**HC**	**PT**
Accessory use*	P	P	P	P	P
Accessory use, Fuel Station*		P	P	P	
Accessory use, Storage Yard*		P	P	P	
Amusement Center, Indoor		P	P	P	
Amusement Center, Indoor Shooting Range*		P	P	P	
Amusement Center, Outdoor*				P	
Animal Care Clinic*	P	P	P	P	
Animal Care Facility*				P	
Bed and Breakfast*		P	P		P
Boarding /Rooming House		P	P		P
Building Material, Garden and Farm Supplies			P	P	
Cemetery*		C_2	C_2	C_2	
Club*		P	P	P	
Communication Facility		P	P	P	
Day Care, all Types*	P	P	P	P	P
Drinking establishment		P		P	
Drive-through Establishment *	P*	P	P	P	P
Dwelling, accessory unit *		P	P	P	P
Dwelling, multi-unit*		P	P		P
Dwelling, single unit attached			P		
Dwelling, single unit detached			P		
Dwelling, two unit			P		P
Eating establishment		P	P	P	P
Eating Establishment, limited	P	P	P	P	P
Financial Institutions	P	P	P	P	P
Entertainment and Cultural Facilities	P	P	P	P	P

Proposed Land Use Classification	PB	CC	LC	HC	PT
Equipment Sales, Rental and Services			P	P	
Food Processing, small scale				P	
Food store		P	P	P	P
Health Care and Social Services	P	P	P	P	P
Higher Education Center		P	P	P	P
Home Occupation*	P	P	P	P	P
Hospital*	C_2	C_2	C_2	C_2	C_2
Industry, craftsman	P	P	P	P	
Industry, light		P		P	
Information Technology	P	P	P	P	P
Laundry and Dry Cleaning		P			P
Live-Work*	C_2	P	P	P	P
Lodging Facility		P	P	P	P
Mortuary				P	P
Parking Facility		P	P	P	P
Pawn Shop		P			
Personal Service	P	P	P	P	P
Professional Service	P	P	P	P	P
Planned Unit Development*		C_3	C_3		C_3
Public Service Facility*	C_2	C_2	C_2	C_2	C_2
Public Service Facility, Limited	P	P	P	P	P
Public Service Use	P	P	P	P	P
Recreation Vehicle Park*				P	
Religious Institution*		P	P	P	P
Residential Care Facility	P	P	P	P	P
Retail		P	P	P	P
School*		P	P	P	P
Short Term Rental*		P	P		P
Fuel Station		P	P	P	
Fuel Station, Super		C_2	P	P	
Storage Facility, Indoor		P	P	P	P
Storage Facility, Outdoor				P	
Storage Yard*				P	
Transit Station		P	P	P	P
Vehicle and Equipment Sales			P	P	
Vehicle Body Shop				P	
Vehicle Repair and Service		P	P	P	
Vehicle Sales, Rental and Service		P		P	
Vehicle Washing Facility		C_2	C_2	P	

(Ord. 3210, 8-23-18) (Ord. 3218, 9-13-18) (Ord. 3233, 12-20-18) (Ord. 3277, 10-10-19)

Table 11-3-5: Dimensional Standards for Commercial Zones

	CC	PB	LC	HC
Site width at front setback - Minimum in ft.		50	*	50
Setbacks – Minimum in ft.				
Front		20	20*	20
Side			*	
Rear			*	
Landscape buffer contiguous to street* in ft.	7*	15	20*	20*
Landscape buffer contiguous to a residential Zones* in ft.	10	10	20/10	30/10
Building height – Maximum in ft.		*	*	
Lot Coverage- Maximum in %		80	80	
*See explanations, exceptions and qualifications that follow in Section 11-3-6A (1-6) of this Zoning Code.				

(1) In the LC Zone, structures may encroach into the twenty foot (20') setback up to ten feet (10') when designed with a pedestrian walkway a minimum of five feet (5') in width connecting the public sidewalk to the structure's entrance. Parking is not permitted to encroach into the twenty foot (20') setback.
(2) In the HC Zone, display space may encroach into the landscape buffer contiguous to the street. Such encroachments may not exceed twenty five percent (25%) of the linear frontage contiguous to the street.
(3) In the CC Zone, the landscape buffer contiguous to a street may be reduced or removed where a building is located within the required landscape buffer, as determined by the Zoning Administrator.
(4) When a multi-unit dwelling or commercial use is developed on a property that adjoins a property zoned RE, RP, R1, R2, TN, or on unincorporated land designated for Low Density Residential in the City's Comprehensive Plan and the height of the building is over twenty-four feet (24'), every one foot (1') of additional building height requires an additional two feet (2') in setback with the minimum setback being thirty feet (30').
(5) For commercial uses, lot coverage shall include all areas under roofs and paved surfaces including driveways, walks, and parking areas. The remaining lot area shall be landscaped as required by this Code.
(6) In the LC Zone residential uses shall comply with the R3A Zone dimensional standards.

(Ord. 3233, 12-20-18) (Ord. 3277, 10-10-19)

REASONED STATEMENT OF RELEVANT CRITERIA AND STANDARDS

FINAL PLAT OF JACKSON HOLE JUNCTION SUBDIVISION, 1ST AMENDED, LOCATED GENERALLY NORTH OF SUNNYSIDE ROAD, EAST OF 1-15, SOUTH AND WEST OF PIONEER ROAD.

WHEREAS, the applicant filed an application for a final plat on January 3, 2020; and

WHEREAS, this matter came before the Idaho Falls Planning and Zoning Commission during a duly noticed public meeting on February 4, 2020; and

WHEREAS, this matter came before the Idaho Falls City Council during a duly noticed public meeting on February 13, 2020 and

WHEREAS, having reviewed the application, including all exhibits entered and having considered the issues presented:

I. RELEVANT CRITERIA AND STANDARDS

1. The City Council considered the request pursuant to the City of Idaho Falls 2013 Comprehensive Plan, the City of Idaho Falls Zoning Ordinance, the City of Idaho Falls Subdivision Ordinance, the Local Land Use Planning Act, and other applicable development regulations.
2. The property is an approximate 16.44 acre parcel located generally north of Sunnyside Road, east of I-15 and south and west of Pioneer Road.
3. The subdivision is an amendment of a portion of the original Jackson Hole Junction Subdivision and includes six commercial lots and one common lot.
4. The plat complies with all requirements of the Subdivision Ordinance and Zoning Ordinance.
5. The proposed development is consistent with the principles of the City's Comprehensive Plan.

II. DECISION

Based on the above Reasoned Statement of Relevant Criteria, the City Council of the City of Idaho Falls approved the Final Plat.

PASSED BY THE CITY COUNCIL OF THE CITY OF IDAHO FALLS

THIS _____ DAY OF _____, 2020

_____

Rebecca L. Noah Casper, Mayor

IDAHO FALLS

MEMORANDUM

FROM: Brad Cramer, Community Development Services Director

DATE: Thursday, February 6, 2020

RE: Ordinance Amending the Form-Based Code to allow Parklets

Council Action Desired

☒ Ordinance ☐ Resolution ☒ Public Hearing

☐ Other Action (Approval, Authorization, Ratification, etc)

1. To table consideration of the proposed Ordinance to the February 27th, 2020 meeting.

Description, Background Information & Purpose

Because this is an amendment to a Zoning Code, public hearing notification is required. Although the hearing was duly noticed and, therefore, must be placed on the agenda, the full ordinance packet was not fully prepared in time for the meeting and therefore must be tabled. The Planning and Zoning Commission reviewed this item at its December 3, 2019, meeting and recommended approval by unanimous vote.

Relevant PBB Results & Department Strategic Plan

☐ ☒ ☒ ☐ ☒ ☐ ☒ ☒

The ordinance to allow parklets in the City Core area is consistent with goals for good governance, growth, livability, sustainability, and transportation by providing additional opportunity for creating public spaces, encouraging alternative modes of transportation, and providing for additional variety and vibrancy in the downtown and south downtown areas.

Interdepartmental Coordination

Staff from Planning, Engineering, Legal, and the Idaho Falls Downtown Development Corporation have reviewed the ordinance.

Fiscal Impact

NA

Legal Review

Legal is reviewing the final ordinance language.

IDAHO FALLS PLANNING AND ZONING COMMISSION
STAFF REPORT

Parklet Open Space Type for the Form-Based Code
December 3, 2019

IDAHO FALLS

Community Development Services

Applicant: City of Idaho Falls

Attachments:
1. Proposed Form Based Code Open Space Type
2. Subdistrict Map

Staff Recommendation: To **recommend** to the Mayor and City Council approval of a new Parklet Open Space Type in the City's Form-Based Code.

Staff Comments:

In 2017, the City adopted the Downtown Master Plan to create a coordinated vision and implementation strategy for downtown Idaho Falls. In the City's Downtown Master Plan there are a number of catalytic projects identified to help achieve the vision of Downtown. Two of those identified catalytic projects include Temporary Sidewalk Reconfiguration for Restaurant Dining, Street/Sidewalk Reconstruction/ Restaurant Dining. The Parklet concept will help to implement these ideas for the Downtown Master Plan's vision, goals, and initiatives in the use of public space such as roadways, sidewalks, and alleys. The Parklet option will help to establish a standardized and organized approach to help create efficient uses of urban space, provide attractive additions to local streetscapes, invite people to sit and stay in public spaces, enhance walkability, and encourage business participation in a vibrant streetscape. Downtown will develop a stronger sense of "place", with attractive and walkable streets, and become a unique and exciting city center for residents and visitors.

The Open Space chapter of the Form-Based Code gives direction to developers and property owners the types and size requirements of open space required in various districts. To provide open space as an amenity that promotes physical and environmental health within the community and to provide access to a variety of active and passive Open Space Types. Courtyards, plazas, and other Open Space Types are a valuable and vital part of a healthy and attractive city center. The new Parklet Open Space Type is proposed to be allowed in Core A, General A, Historic Core, and Edge A subdistricts. These open spaces may be temporary or permanent and will have an approval process similar to the site plan approval process the City currently uses.

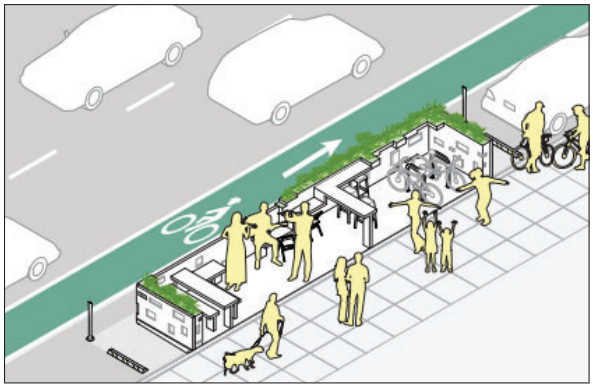

Figure 6.9 (1) Typical Parklet

6.9 Parklet Open Space Type

1. Intent

The purpose of this Open Space Type is to provide attractive additions to streetscapes, invite people to sit and stay in public spaces, enhance walkability, and encourage business participation in a vibrant streetscape. Parklets are public seating platforms that convert curb side parking spaces into vibrant community spaces. They are the product of a partnership between the city and local businesses, residents, or associations. Most parklets have a distinctive design that incorporates amenities such as seating, greenery, and/or bike racks and accommodate unmet demand for public space on thriving downtown streets or commercial areas. While they are funded and maintained by neighboring businesses, residents, and community organizations, they are publicly accessible and open to be used by all.

Figure 6.9 (2) Typical Parklet Examples

Parklet Requirements	
Dimensions	
Minimum Length (feet)	25’
Maximum Length (feet)	40’
Minimum Width (feet)	6’
Maximum Width (feet)	Must be at least 3’ from all traffic travel lanes as determined by the City Engineer.
Adjacent Parcels	
Permitted Districts	Core A, Historic Core, General A, Edge A
Frontage Orientation of Adjacent Parcels	Any
Location	
Must be located at least 25’ away from the intersection.	
Must not obstruct any fire hydrant, utility service or emergency service access.	
May not block any public alley access or any private alley access without sign consent of all interested parties.	
Must not obstruct the required sight distance triangle.	
Must be located directly in front of the business requesting the use. The area may not extend beyond the limits of the business storefront.	
Not permitted in bus stops but may be adjacent to them.	
No more than 10% cumulatively of any block may be used.	
A minimum of 6’ clearance is required from the edge of the parklet to any building or obstacle.	
Safety	
Must be setback at least 4’ from contiguous parking stalls. If contiguous with parallel parking stalls must also provide a curb stop to buffer the parking from the parklet.	
Vertical elements are required that make them visible to traffic, such as bollards or posts with reflective markers.	
A slip resistant surface must be used.	
An open guardrail or barrier must be installed to define the space and may not exceed 3’ in height. The guardrail must be able to withstand 200 lbs of horizontal force. No fabric, chain link fencing, chicken wire, or snow fencing may be used as guardrails or barriers.	
Not allowed in a location where the speed limit exceeds 30 mph.	
A flush transition at the sidewalk and curb to permit easy access and avoid tripping hazard	
Improvements	
Maximum Impervious + Semi-Pervious Surface	10% + 90%
Lighting	If intended to be used at night lighting is required, max 12’ fixture height
Landscaping	Planters are allowed, but may not exceed 3’ in height.
Permitted Uses	
Dining Areas	
Bicycle Facilities	
Public Seating	
Recreational Space (excluding playground equipment)	
Landscape Islands	
No signage is allowed	

December 3, 2019 7:00 p.m. Planning Department

Council Chambers

MEMBERS PRESENT: Commissioners Natalie Black, Joanne Denney, Brent Dixon, Gene Hicks, George Morrison. (5 present 4 votes).

MEMBERS ABSENT: George Swaney, Lindsey Romankiw, Arnold Cantu , Margaret Wimborne

ALSO PRESENT: Planning Director Brad Cramer; Assistant Planning Directors Kerry Beutler, Brent McLane and Brian Stephens; and interested citizens.

CALL TO ORDER: Natalie Black called the meeting to order at 7:00 p.m.

CHANGES TO AGENDA: None.

MINUTES: Hicks moved to approve the November 12, 2019 minutes, Morrison seconded the motion and it passed unanimously.

Business:

5. ANNX 19-013: ANNEXATION/INITIAL ZONING. Annexation and Initial Zoning of I&M. Stephens presented the staff report, a part of the record.

Applicant: Bryce Esplin, 3834 Professional Way, Idaho Falls, Idaho. Esplin stood for questions.

Morrison moved to recommend to the Mayor and City Council approval of the annexation and initial zoning of I&M for Lot 4, Block 1, Sunnyside Industrial and Professional Park, as presented, Hicks seconded the motion and it passed unanimously.

Public Hearing(s):

2. AMENDMENT: Amendment to Form Based Code. McLane presented the staff report, a part of the record. There was discussion regarding barriers, and speed limits that would limit the areas that Parklets are allowed. Dixon asked questions about bike riders. McLane confirmed that the parklet wouldn't stick any farther out than a parked car. Hicks asked if this is for food trucks. McLane stated that this isn't a food truck thing and the permitted uses are very specific as to what is permitted. Black asked if there is a specific reason not allow food trucks. McLane stated that food trucks can park in any stall as long as they are abiding by the parking requirements. Dixon asked if the 10% limit is first come first serve. McLane stated that there is a lease requirement that would need to be renewed and if it becomes an issue that people are feeling like they are not getting the opportunity to participate they might have to address it in the future. Black asked if this is something that is being requested. McLane stated it is the City being proactive as well as some requests for something like this. McLane believes that parklets will create vibrancy on the street and bring the product out to the street which is valuable for the property owner. McLane believes it is a good use of the right of way. Dixon asked about the short sides of blocks where the alleys come out and expressed a concern about the maximum 10% and minimum length of 20'. McLane stated that the minimum size would be one parking

stall. McLane stated that it will be restrictive where they can go. McLane stated that in the Code they are restricted to specific sub-districts for compatibility.

Black opened the public hearing.

City is the Applicant.

No one appeared in support or opposition of the application.

Black closed the public hearing.

Morrison likes it and thinks it's a good idea.

Hicks stated that he has seen it in a lot of cities around the world and they are great.

Dixon moved to recommend to the Mayor and City Council approval of the Amendment to the Form Based Code for Parklet, Denney seconded the motion and it passed unanimously.

City of Idaho Falls Downtown Master Plan and Implementation Strategy

Subdistricts

- Core A: Mixed Use Development
- Historic Core
- General A: Multi-Purpose and Mixed-Use Redevelopment
- Edge A: Riverwalk Frontage Residential Focused
- Edge B: Highway Frontage Commercial Focused
- Edge C: Residential Buffer

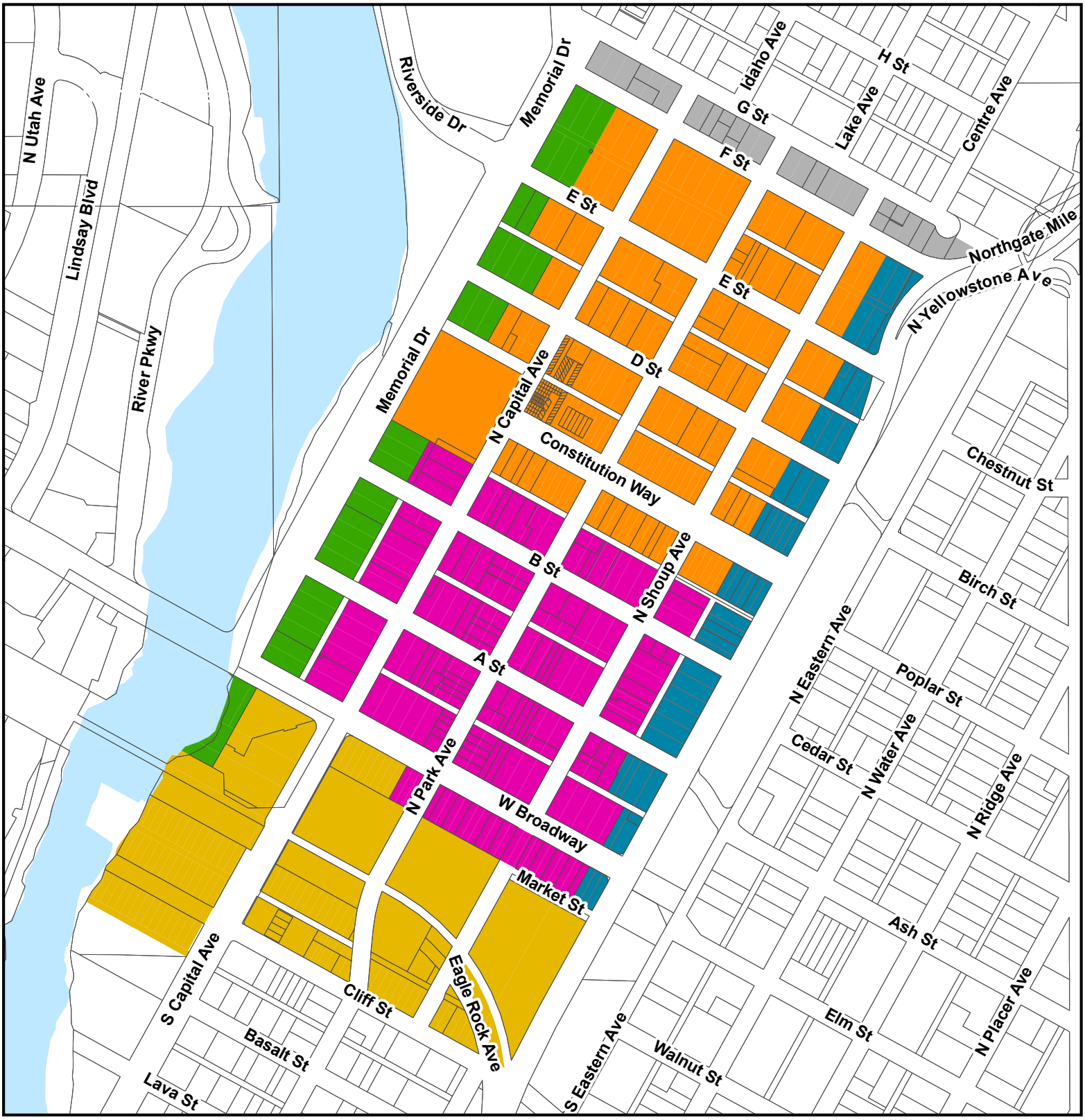

PROJECT	Temporary Plaza		
Project Type	Short Term/Tactical, Operating Funds		
Cost	Low		
Vision Link	Urban Design	Tactical Urbanism	Market & Housing
Companion Project	Programmatic: Additional Summer/ Winter Events/Bonneville Hotel Redevelopment		
Description	Consider closing a parking lot to create space to test public events. The closure could be short term, for a weekend or longer term, for the summer months. The space made available could be used by tenants to display goods, by food trucks at a festival event, or as public plaza space. Temporary improvements may include painting the pavement with bright colors, installing temporary lighting and planters, and temporary seating. The project regulating plan suggests parking lots that may be a good candidate for these improvements. Civic spaces may also enhance the marketability of adjacent parcels for housing developments.		

PROJECT	Intersection Reconfiguration		
Project Type	Short Term/Tactical, Operating Funds		
Cost	Low		
Vision Link	Urban Design	Tactical Urbanism	Transportation
Companion Project	Temporary Street Reconfiguration, Bonneville Hotel Redevelopment		
Description	The intersection of streets are key locations for enhancements to the urban environment. Sidewalk bulbouts for example provide additional space for aesthetic upgrades and shorten the crossing of streets for pedestrian. These, with planters, are already found at many intersections in downtown. The intersection of Constitution and Park Street is a location where new bulbouts may be tested. This location has been chosen to support the rehabilitation of the Bonneville Hotel project and may be tested with flexible delineators, temporary planters and other aesthetic upgrades. Additional improvements such as parklets, enhanced seating, planters and festival string lighting may also be tested here and at other locations. B Street and Park Street is a candidate for other temporary upgrades to support the plaza and stage. Short term reconfiguration may be temporary, allowing measured review prior to commitment of capital funds. Other intersections may be tested prior to permanent improvements.		

PROJECT	Temporary Sidewalk Reconfiguration forRestaurant Dining
Project Type	Short Term/Tactical, Operating Funds
Cost	Low
Vision Link	Tactical Urbanism
Companion Project	Temporary Street Reconfiguration
Description	Portions of existing sidewalks may be temporarily reconfigured and assigned to outdoor dining. Outdoor dining can improve aesthetics by introducing street furnishings, increase activity on the street and provide additional revenue for small business owners. The dining area shall be delineated with temporary fencing and populated with moveable tables and chairs. Where sidewalk width is not adequate, or where additional space is desired, small parklets can be developed in parallel parking stalls adjacent to the sidewalk with temporary planters and seating/dining. Testing of dining can be temporary to test the effect on parking and traffic patterns.

PROJECT	Street/Sidewalk Reconstruction/ Restaurant Dining
Project Type	Medium Term, Capital
Cost	Medium/High
Vision Link	Urban Design
Companion Project	Intersection Reconstruction
Description	Reconfigure Constitution as a boulevard with wide sidewalks with room for outdoor dining, street trees, and parking with a planted median down the center of the street.

PROJECT	Intersection Reconstruction
Project Type	Medium Term, Capital
Cost	Medium/High
Vision Link	Urban Design
Companion Project	Street Reconstruction
Description	Temporary upgrades as tested at two intersections (Constitution & Park Street, B Street and Park Street) may be made permanent at this and other intersections across downtown. This may include the addition or enhancement of sidewalk bulbouts with planters, new street and traffic lighting, overhead festival lighting, furnishings, landscaping, and outdoor dining opportunities. Outdoor dining, parklets, and enhanced planters may result in geometric changes to streets and parking. The introduction of upgraded materials in streets and sidewalks may also be considered.

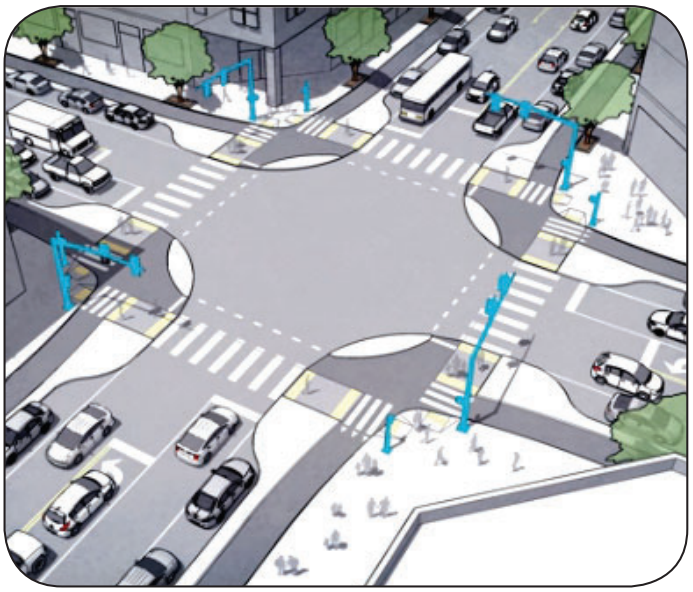

PROJECT	Plaza Development
Project Type	Medium Term, Capital
Cost	Medium/High
Vision Link	Urban Design
Companion Project	Intersection Reconstruction, New Recreation Center
Description	Civitan Plaza reconstruction/Stage reconfiguration w/intersection & street enhancements for events (for example, lights over intersection to create event space) Construct Urban Plaza in northern blocks

IDAHO FALLS

MEMORANDUM

FROM: Brad Cramer, Community Development Services Director

DATE: Thursday, February 6, 2020

RE: Planned Unit Development Amendment and Reasoned Statement of Relevant Criteria and Standards Linden Trails Townhomes

Council Action Desired

☐ Ordinance ☐ Resolution ☒ Public Hearing

☒ Other Action (Approval, Authorization, Ratification, etc)

1. To approve Planned Unit Development for Linden Trails Townhomes as presented.
2. Approve the Reasoned Statement of Relevant Criteria and Standards for Linden Trails Townhomes as presented, and give authorization for the Mayor to execute the necessary documents.

Description, Background Information & Purpose

For consideration is the application for a Planned Unit Development (PUD) Amendment for Linden Trails Townhomes. The Planning and Zoning Commission considered this item at its January 7, 2020 meeting and recommended denial of the PUD by a 5-3 vote. Specifically, the motion at the meeting stated to recommend denial, "on the basis that (the developers) have an approved amendment that was submitted in July 2019 and there needs to be more discussion between the developer and the Community Development Department of the appropriateness and the best way to continue with this PUD, and there is no indication that they are suffering either financially, or suffering any adverse consequences to the developer to continue development of the PUD with the twin home concept." This motion was not based on any criteria relevant to approval or denial of the request and staff does not concur with the recommendation and recommends approval of the request. The item is now being submitted to the Mayor and Council for consideration.

Relevant PBB Results & Department Strategic Plan

☐ ☐ ☐ ☐ ☐ ☐ ☐ ☐

Because this item is quasi-judicial, staff is not including any connections to the community-oriented results.

Interdepartmental Coordination

Staff from Planning, Engineering, Water, Sewer, Streets, Sanitation, Fire Prevention, Power, and Survey have reviewed the PUD plans.

Fiscal Impact

NA

Legal Review

NA

Planned Unit Development

Lot 1, Block 1, Linden Trails Division 1, 3, 4

Legend

- Site
- City Limits
- Area of Impact

Overlays

- PT
- PT&T-1
- PUD
- T-1
- T-2
- RE
- RP
- R1
- R2
- TN
- RMH
- R3
- R3A
- PB
- DT
- CC
- LC
- HC
- R&D
- LM
- I&M
- P

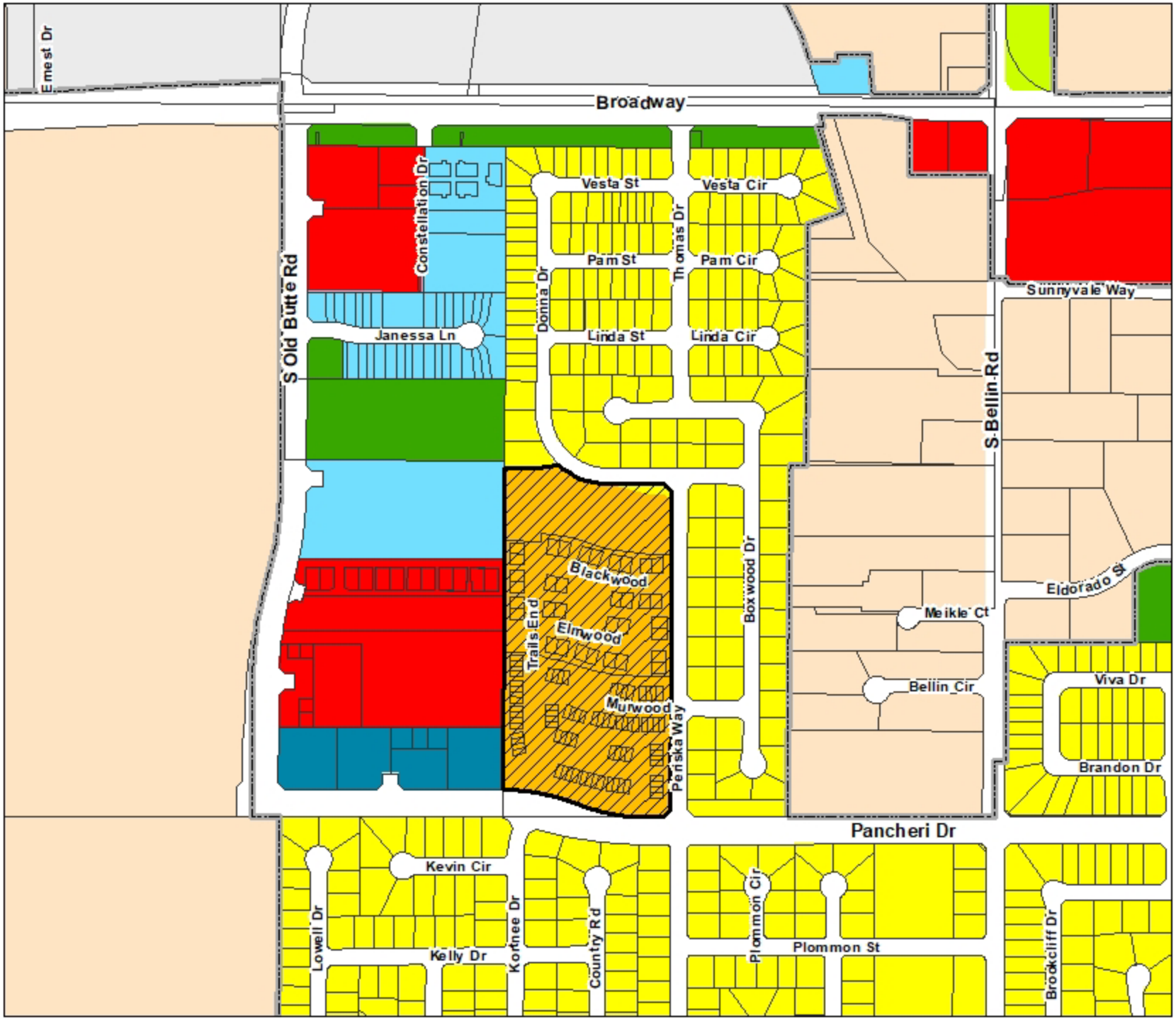

IDAHO FALLS

Planning Division
City Annex Building
680 Park Ave.
Idaho Falls, ID 83402
(208) 612-8276

N

Thomas Dr
Donna Dr
Blackwood
Elmwood
Trails End
Boxwood Dr
Periska Way
Murwood
Bellin Cir
S Old Butte Rd
Pancheri Dr
Kortnee Dr
Kevin Cir

IDAHO FALLS PLANNING AND ZONING COMMISSION
STAFF REPORT
Planned Unit Development
Linden Trails Division No. 4
January 7, 2020 (Updated)

IDAHO FALLS
Community Development Services

Applicant: Connect Engineering

Location: Generally south of Broadway, west of S Bellin Rd., north of Pancheri Dr. and east of S Old Butte Rd.

Size: Approx. 16.79 acres
Units: 150 Total
Duplex: 34
Townhome: 116

Existing Zoning:
Site: R2
North: R1
South: R1
East: R1
West: R3A/LC/PB

Existing Land Uses:
Site: Undeveloped/ Residential
North: Residential
South: Residential
East: Residential
West: Residential/ Commercial

Future Land Use Map:
Lower Density

Attachments:
1. Maps
2. Aerial photos
3. PUD Site Plan
4. 2016 Phasing Plan
5. Amended PUD Site Plan

Requested Action: To **recommend** to the Mayor and City Council approval of the amendment for Linden Trails Townhomes PUD.

History: The Planned Unit Development (PUD) for Linden Trails Townhomes was approved in November of 2016. The PUD initially included 172 townhome units split into six phases of construction. Phases 1-3 (76 units) have been completed as shown on the approved phasing plan.

In May of 2018 the Developer amended the PUD site plan to change the remaining phases of the project from the four attached townhome style units to duplex units. The revised plan included 27 duplex structures (54 units). Because the building footprints would not change and the overall density would be less than the original approved plan this amendment to the site plan was done administratively, at the staff level, as outlined in the Zoning Ordinance for minor changes to the PUD.

The Developer would now like to amend the PUD further, returning the northern portion of the development (phase 6) from duplex units back to the four attached townhome style units in the original plan. Because of the increased density from the amended plan this constitutes a major change to the PUD and requires the amended plan go back through the hearing process.

Staff Comments: The revised PUD site plan includes duplex units in the center core phases of the development with townhome units on the southern and northern ends. The project includes 17 duplex structures (34 units) and 29 townhome structures (116 units). The overall development will remain at a lower density than originally approved with a total of 150 units. The PUD will continue to have both common and private space for the residences as well as meet the minimum parking requirements.

Staff Recommendation: Staff recommends approval of the amended PUD as it meets the minimum requirements201 for development outlined in the Zoning Ordinance. 2Amdn

Comprehensive Plan Policies:

Residential development should reflect the economic and social diversity of Idaho Falls. New and existing developments should foster inclusiveness and connectivity through mixed housing types and sizes and neighborhood connections through parks, open spaces and streets. (p. 40)

Walkways shall be provided from schools and parks to those portions of residential subdivisions in which homes back such facilities. By providing such facilities, children will have access to parks and schools without walking around residential blocks. (p. 43)

Bikeways should tie residential neighborhoods to schools, shopping, and employment. Bikeways offer an alternative to the automobile and provide transportation facilities for those unable to drive, primarily the youth of the City. (p. 43)

Land in residential subdivisions should be dedicated for walkways and bikeways. If the City adopts park dedication requirements, in-lieu fees, or impact fees, an acceptable alternative for the developer is to dedicate the land adjacent to the canal system for bikeway development. The land must link to the proposed City-wide system and directly benefit the residents of the subdivision. (p.86)

Zoning:
11-6-3: APPLICATION PROCEDURES.
(I) Application Procedures for a Planned Unit Development (PUD).

(9) PUD amendments shall follow the following procedures for minor and major changes. Amendments shall be in keeping with previous phases or approved PUD development plans and shall meet the same objectives as the original PUD. If the proposed amendment is intended to alter the previously approved plans objectives the applicant will justify how the amendment fits within the whole of the development.

(a) Minor changes to a PUD planned unit development may be approved administratively and in writing whereupon a permit may be issued. Such changes may be authorized without additional public notice at the discretion of the Zoning Administrator. Changes not specifically identified below shall constitute a major change. Minor changes shall be defined as follows:

(i) A change of less than five percent (5%) in the approved number of residential dwelling units, provided an increase will not exceed the permitted density of the Zone.

(ii) A change of less than five percent (5%) in the amount of commercial square footage within the development.

(iii) A change in location or layout of approved common areas and amenities provided there is no decrease.

(iv) A change in building location or placement less than twenty percent (20%) of the building width.

(b) Major changes to a PUD must follow the same review, public notice and hearing process required for approval of the initial PUD Planned Unit Development. Major changes shall include, but not be limited to the following:

(i) A change in the character of the development.
(ii) A change of greater than five percent (5%) in the approved number of residential dwelling units.
(iii) A change of greater than five percent (5%) in the amount of commercial square footage within the development.
(iv) A reduction in the approved common space and/or amenities provided.
(v) A change in the location and placement of buildings greater than twenty percent (20%) of the building width.
(vi) An increase in the number of lots above what was approved through the preliminary plan review.
(vii) Any other change to the plan not defined herein as a minor change.

January 7, 2019 7:00 p.m. Planning Department

Council Chambers

MEMBERS PRESENT: Commissioners Margaret Wimborne, Joanne Denney, George Swaney, Lindsey Romankiw, George Morrison, Brent Dixon, Natalie Black. (8 present 7 votes).

MEMBERS ABSENT: Arnold Cantu

ALSO PRESENT: Planning Director Brad Cramer; Assistant Planning Directors Kerry Beutler; and interested citizens.

CALL TO ORDER: Margaret Wimborne called the meeting to order at 7:00 p.m.

CHANGES TO AGENDA: None.

MINUTES: Hicks moved to approve the December 3, 2019 minutes, Morrison seconded the motion and it passed unanimously.

Public Hearing(s):

1. PUD 16-005: PLANNED UNIT DEVELOPMENT AMENDMENT. Linden Trails Townhomes. Beutler presented the staff report, a part of the record. Wimborne asked if the garages are new from the original plan. Beutler indicated that the garages are new since the initial plan of 2016 but were included in the plan that was amended in the summer of 2019. Morrison asked if the Townhouses are double car garage on the first level and then the living space is second floor. Beutler indicted it is a single car garage for the four units attached. Beutler stated that the development does have some detached garage structures and the parking lot style parking.

Wimborne opened the public hearing.

Applicant: Blake Jolley, Connect Engineering, 1150 Hollipark, Idaho Falls, Idaho. Jolley indicated that the intent of the original PUD is still being met. Jolley stated that the units that were amended last Spring was a decrease in the overall number of units but kept the common open space and amenities the same. Jolley stated that this additional amendment the numbers are still below the original count of 172. Jolley stated that they are keeping the common space available and nearly 40% of the development. Jolley stated that Periska is a residential collector and is designed to handle traffic for this development and when they met with the City Engineer in 2016 that was the intent is for Periska to be built with the wider right of way.

Black asked what the reasoning behind the requested change in July and the reasoning behind the current requested amendment. Jolley deferred to Dennis Hourany.

Dixon asked what is behind the existing units shown as a reddish hashed area. Jolley stated that is requested by Fire and is a secondary emergency fire access that is similar to the one constructed on the south end of the development. Dixon asked about the feature on the north west corner. Jolley indicated it is a tot-lot and farther west is a storm water retention pond.

Support of Application:

Dennis Hourany, 6382 Stateline Road, Wyoming. Hourany is part of the developing team. Hourany indicated that the count was originally 172 units and the belief and vision was to have a

multi-generational subdivision that would be well received. Hourany stated that when they converted Division 2 and 3 townhomes to twin homes, they thought that the market was stronger for the twin homes and it has proven to not be, and there is a huge demand for entry level starter homes. Hourany stated that young families are demanding the fourplex style that are individually platted. Hourany stated that the market is lower for the twin homes due to price point it made sense to go back to the townhome style on the north end of Division 4. Hourany indicated that their density is still well below the 172 that were originally approved. Hourany stated that they have two different products on the Townhome style (1 w/attached garage, 1 w/ no garage). Hourany stated that the ground floor space on the units without garages has much more living space, so it appeals to families. Hourany stated that the ones with the single car garage were appealing to working couples, retired couples. Hourany stated that when they put the garage buildings in, they offered the non-garage units and they found that no one wanted a garage. Hourany stated that they had to sell the units below cost to move them as there is no demand. Hourany stated they decided to not build any more garages as no one wants them.

Swaney asked about the snow removal problems in the development and asked who is responsible for snow removal. Hourany stated that Periska, Donna and Thomas all are City streets and they are class 3 road and the bottom of the list for City streets. Hourany stated that the PUD streets are to be maintained by the HOA. Hourany stated they hired a new firm this winter and met yesterday with the firm owner and told him it was unacceptable, and they needed to use small equipment that could do a better job. Hourany stated that they showed up today with the smaller equipment and got 1/3 of the development done and will be back. Hourany stated that it is unacceptable the way the roads have been left.

Black clarified that each unit has 2 parking spots. Hourany stated that they are in excess of the minimum requirement. Black asked what the cost of the townhomes that were selling that you want to switch back to. Hourany stated that the townhomes are $165,000 – 170,000 and the way commodity prices are they will likely push upon the remaining 16 units. Hourany stated that the twin homes now are pushing $270,000. Black asked what the square footage is of the twin homes. Hourany indicated that the Townhomes are right at 1450 square feet, and the twin homes are (duplex) are just under 2600 square feet. Black confirmed and Hourany agreed that they did not find a market for the twin homes. Hourany added that it doubles the cost of the HOA dues. Hourany stated that the HOA dues on the townhomes are $75 and the twin homes are $150.

Hicks clarified that there are two parking spots per unit and no street parking. Hourany confirmed there is no street parking.

Opposed to Application:

David Lloyd, 3093 Willow Wood, Idaho Falls, Idaho. Lloyd almost bought a home in the neighborhood for over $400,000. Lloyd stated that there are high end custom homes in the neighborhood (4,000 – 4,500 square feet). Lloyd stated that those custom homes came in and built based upon the City's ordinances and density levels. Lloyd stated that they are now proposing to change the density levels and potentially lower their residential values. Lloyd's daughter built in the neighborhood. Lloyd is concerned that people are spending $450,000 on a home and then the developer gets to come in and get more money by changing. Lloyd indicated that part of the job of the Commission is to preserve property values. Lloyd stated that by them allowing the developer to make more money that is potentially going to cost the current residents who bought based upon the ordinances.

Swaney asked Lloyd if within the PUD someone bought a $400,000 home. Lloyd confirmed that within Linden Trails. Lloyd stated that the home buyers were given a plot of the neighborhood that showed what was going to be built and it did not show the two-story glorified apartments that are going to be rentals. Lloyd stated that it is not fair for them to buy the houses then have someone change the rules.

Black stated that when this PUD was originally approved in 2016 it was for townhomes and then in July 2019, they requested a lower density with the duplex properties. Lloyd stated that his understanding is that in 2016 they went to the twin homes and now after they have bought their house and built their houses now, they are going to the townhomes. Black stated that the original plan was for Townhomes. Lloyd stated that the builder sent the current zoning when they bought their house and it did not include townhomes that they are asking for and only included twin homes. Lloyd feels that the message that is being sent is the developers can change the plan. Lloyd stated that people bought homes based upon the current ordinances, and now the ordinance is being changed. Black confirmed that the ordinance is not being changed, but the development had a plat and what the Commissions recollection is that the plat showed it to be all townhomes. Lloyd asked if the presentation tonight indicates that in 2016 it was townhomes and then in 2019 it was twin homes. Black again confirmed that in 2016 this current section was townhomes and then this Commission had nothing to do with the July 2019 change, that requested a less dense development with the twin homes and now they are requesting to go back to the original design of townhomes for the last section.

Taylor Houcke, 525 Fox Wood, Idaho Falls, Idaho. Houcke drove past this development prior to buying a home and watched this development come up from the ground. Houcke stated that the first homes were purchased in 2018. Houcke walked through the first model home and fell in love. Houcke was shown a picture that included twin homes. Houcke stated that it might not have been the official zoning, but it was what was advertised. Houcke stated that on March 23, 2019 when she asked about the twin homes when they were being built, she requested a copy of the plans from the builder and was sent the plat that shows twin homes, and it is new knowledge to her that it was not approved until July 2019. Houcke stated that she went door to door to talk to her neighbors and talked to over 25 property owners in Linden Trails and after they learned the details no one was in favor of the rezone. Houcke is speaking on behalf of the herself and the others signed on the petition in objection to the zoning change. Houcke stated that the zoning change would have a significant negative impact on all of the property owners living in Linden Trails. Houcke stated that her first concern is the unethical origins. Houcke stated that the images given to her as the owner of the home depicted twin homes as was the case with the other property owners. Houcke stated that it was advertised in writing and verbally that the area within PUD 16-005 would be twin homes and less traffic which was an obvious selling factor. Houcke stated that it was also advertised to potential buyers that the Linden Trails subdivision would be a neighborhood with opportunities for people in all stages of life due to the townhomes, twin homes (duplex), and single family. Houcke stated that the deletion of the twin homes and the addition of more townhomes would ruin the idea of the stages of life idea. Houcke stated that the quick and quiet change and lack of notification to those affected is negligent on the part of the builders. Houcke stated that the sign was posted on a trail that should be maintained by the HOA and the snow has not been removed and the sign was unclear, and the maps shown today were not included. Houcke stated that most people thought tonight's meeting was about zoning for more twin homes that were already approved, given the drawing that

everyone had already seen and decided to purchase homes based off of. Houcke stated that many of the property owners in the Linden Trails development, including herself, would not have purchased homes, had this additional area been zoned for town houses. Houcke stated that the model homes listing price was $387,000. Houcke stated that the cost of the townhomes is $170,000 and having those townhomes closer in the neighborhood starts to effect property values. Houcke stated that the twin homes at $270,000 is a higher value and gives a sense of single-family neighborhood. Houcke stated that the change will double the density from the twin homes that were proposed to all the homeowners as they purchased their homes and would result in a dramatic increase in traffic. Houcke stated that the roads that will go through the proposed townhomes are not City roads, they are fire lanes and no street parking. Houcke stated that there are cars parked in the fire lanes because the places that have two parking spaces is one garage bay and one driveway in front of it. Houcke stated that the influx of people and vehicles will impact the tedious snow removal of the private fire planes. Houcke stated that there are complaints of cars parking in no parking zones, due to lack of parking. Houcke stated that Periska Way will have more cars parked on the street making snow removal for the City more challenging. Houcke stated that there is no where for people to move their cars during the times of snow removal. Houcke stated that the rezone from Twin homes to Townhomes will negatively impact all current and future homeowners in Linden Trails.

Sara Hamilton, 2830 Blackwood, Lot 103, Linden Trails, Idaho Falls, Idaho. Hamilton is opposed to the changes. Hamilton closed on her home on August 2, 2019 and was shown the twin homes instead of the townhomes. Hamilton indicated that she had known they were going to change to townhomes, she would not have bought her home. Hamilton's property is building 12 and her home will be directly in front of the proposed townhomes. Hamilton indicated that she is concerned about one of the property lines going through the parking lot. Hamilton stated that the twin homes are not out of reach for young families, but she disagrees as she is 22 and it was not out of reach for her and the area supports it with a growing research and medical field. Hamilton stated that the 4 units in 12 and 13 all sold before they were finished being built and she had to convince the developer to sell her the model home. Hamilton stated that the developer wanted her to buy a townhome and then wait until October for building 14 twin home to be completed. Hamilton stated that these buildings have not been sitting empty and she believes 12, 13 and 14 are completed and all of them are full except one section of 14. Hamilton doesn't believe the cost is out of reach for young families. Hamilton agreed with Houcke that continuing with the twin homes will allow for expansion of people coming out of the townhomes into twin homes. Hamilton acknowledged that this amendment is less dense than the original proposed plan, but she bought the home with the understood density of the earlier plat with twin homes. Hamilton believes the townhomes will affect her property value more than anyone else because of the proximity to the townhomes. Hamilton stated that the 40% of common space that has been indicated, but part of that common space is actually part of the yards, so she believes it is inflated number. Hamilton stated that a lot of the townhomes are being rented and when there are less homeowners the property values go down because renters don't take as good of care. Hamilton stated that the HOA agreement limits the number of renters, and the increased density will take a rental opportunity away from others. Hamilton is concerned about noise and there has already been concerns with the already built townhomes regarding mariachi music at 3a.m. Hamilton stated that 3 homes sold on the same street very close to each other, and she suspects it was due to the noise. Hamilton stated that the twin homes have $150 HOA fee and the higher HOA fees benefit the neighborhood more than the $75 HOA fee, as it decreases the number of

things that need to be plowed and put more money in the neighborhood for things like landscaping. Hamilton stated that the increased density will take away why they bought their homes. Hamilton stated that if it becomes crowded it will create a negative experience for everyone and that is not what Idaho Falls is about.

Ty Bergeson, 2831 Blackwood, Idaho Falls, Idaho. Bergeson stated that this development presented an interesting opportunity as it seemed like an excellent example of balance, to include full family homes, twin homes and townhomes. Bergeson stated that everyone was given the diagram that showed the twin homes. Bergeson stated that he has been watching the property for almost 2 years and in the 18 months he was actively watching the property the diagram presented (July 2019 amendment) is what he based his purchase on, and the fact that the upper corner would be a balance of twin homes to balance the heavy density of the townhouses. Bergeson stated that February of last year he was given the opportunity to choose any location in the proposed area to build his duplex. Bergeson is concerned with the density and seeing how the southern area has developed and the fire lanes have constant chronic parking problems. Bergeson is concerned about the overall property value.

Curtis Tucker, 685 Periska Way, Idaho Falls, Idaho. Tucker showed on the map where his home is. Tucker indicated that frequently there are cars up and down the street because there is not enough parking in the area. Tucker believes there is a current parking problem and continuing with more dense area to the north will enhance the problem. Tucker stated that when he purchased his home he was told and sold on the idea that all of the townhomes would be to the south and everything else would be twin homes. Tucker was told by Dennis Hourany on December 21, 2018 that the remainder of the build out would be twin homes. Tucker stated that the amendment will negatively affect his home value, the traffic is a problem and he is against the amendment and asked the Commission to not accept the change.

Wimborne asked the applicant to describe what was presented at different times. Wimborne indicated that the changes were made in July that made the switch from the original PUD to one that included the twin homes in the area, but there have been several people in the neighborhood that say as far back as 2018 what they saw was plans for a PUD that included the twin homes, not the original application that showed the townhouses.

Applicant: Dennis Hourany, 6382 Stateline, Wyoming. Hourany responded to Mr. Tucker, and indicated that when he bought his home there was no mention at that time of changing from the original PUD to twin homes because at that point they were just getting started on selling the townhomes, and they hadn't seen a demand to make the change. Hourany stated that the change was represented in the diagram that was shown with all twin homes in division 3 and Division 4. Hourany stated that it was the first 3rd of 2019 that they decided to do twin homes.

Swaney clarified that the application that was submitted to amend was submitted to the Community Development Department in July 2019, and as presented by the testimony, as early as March of 2019 you were already advertising the unapproved change that was not submitted to the Community Development Department until July 2019. Hourany stated that he's not sure if it was March, but they did talk to planning and Planning had unofficially blessed the change, and in July they went official.

Black asked when the twin homes were started to be built. Hourany stated that the first foundation was dug the first part of 2019. Hourany stated that he'd have to look at the permits.

Hourany stated that because of the weather they had huge delays and dug holes and foundations and they sat. Black stated that part of the testimony tonight is that someone bought and moved into their twin home in August of 2019 and this was only approved in July 2019. Black asked how many twin homes have been built. Hourany stated that there have been 6 built and one still is available for sale. Hourany stated that there are 2 foundations under construction with just concrete. Black asked why Hourany doesn't feel the market is there for the twin homes. Hourany stated that it is not as strong, and the demand isn't there. Hourany stated that because there is a short supply of homes for first time home buyers that is what is driving the demand. Hourany stated that when they started this project the basis was everyone wants a 5000 sq. ft. home, but the cost of building a home is high and this development is beautiful. Hourany stated that the original PUD had a unanimous vote in favor. Hourany stated that they have 40% open space, there is a car wash that isn't complete yet. Hourany stated that they put $50,000 of trees down the City street to beautify it. Black asked if people are parking in the fire lane. Hourany stated that construction workers have been, and they have called the fire department to police the fire lane and it is hardly seen any more. Black confirmed that it isn't residents. Hourany stated that you might see the package delivery truck stop, but no residents. Hourany stated that Periska has hardly any vehicles on Periska.

Swaney asked if Hourany is directly associated with the HOA. Hourany stated that they are currently controlling the HOA.

Wimborne closed the public hearing.

Swaney stated that it was suggested that the developer had gotten a tacit approval from the Community Development Department to initiate the construction of twin homes moths prior to the submittal of the change to the PUD. Beutler stated that he is unsure of specific dates, but prior to the change being approved, there was conversations with the developer about the concept and idea, and would it be possible, would it be a major or minor change. Beutler stated that they had those conversations in advance of the July approval. Swaney asked how the construction permits obtained to start the foundations and construction of the twin homes prior to the change being approved. Beutler stated that permits couldn't be available until after the approval was in place. Swaney asked if they initiated construction without permits. Beutler stated that they'd have to look at the time frame. Beutler stated that when they do the review for issuance of a permit, they are reviewing according to the plan set that is approved, with the approved site plan.

Dixon stated that he believes the size of the hole and the size of the foundation is identical whether its townhomes or the twin homes, so they could be putting in a foundation without knowing what they would build on it. (audience member burst out "that is incorrect"). Beutler stated that they can check the permits, but it is unrelated to the PUD in front of you.

Morrison stated that there is not such a thing as tacit approval by Zoning Department.

Black remembered when this was approved, and the neighborhood did not want it. Black stated that there is need for housing for starter families, first time home buyers. Black stated that there is very little housing for empty nesting, so the mix is necessary. Black has looked into duplexes and is interested in the statement that there is no market for it, when for 6 months 5 of the 6 units have been sold. Black stated that the change was requested but didn't come to the Commission because it was a minor change, but the reason to go back to the original plan is interesting.

Black stated that she has seen the homes in the area. Black stated that she doesn't feel like the townhomes in this area are working well, and she hates tandem parking and hates not having enough parking in an area. Black stated that it sounds like parking and snow removal are issues. Black doesn't like when they approve things that do not work well. Black stated that rentals are needed and if the HOA has a restricted number of rentals then that should cover some. Black stated that it has been documented in town that having apartments and having lower income units even though neighbors don't like it, it does not lower your home value. Black stated that Idaho Falls needs all type of housing, they need apartments, townhomes, housing for starter families, empty nesters and retirement. Black stated that this started out as an area that was for all of those people. Black stated that the change is interesting and what buyers were told. Black stated that the Commission cannot be held responsible for what a builder or real estate agent represents. Black stated that they can only be responsible for what they have approved, what is before the Commission and the planning and ordinance. Black stated that this does fit in the ordinance, but maybe not well because of the issues the residents have discussed, including, parking, snow removal, etc. Black feels that often they fail because they allow areas that don't have enough spaces for cars. Black stated that it is always interesting when they have neighbors talking about all the traffic, and they then state they have 5 cars in their household, that does add to the traffic. Black stated growth ads to traffic. Black stated housing is needed.

Morrison reiterated Blacks remarks. Morrison is concerned that the change has changed from the original, and it is a running target for people to keep track of. Morrison is concerned and understands the homeowners concern over that. Morrison stated that it does meet all the requirements but isn't sure this is a good fit.

Dixon asked the Commissioners to turn in their packet to the aerial. Dixon stated that the area in red is the area being discussed. The area to the east and north is single family homes. Dixon stated that this body originally approved 172 units, now they are being asked to approve 154 units, so the Commission is being asked to approve a lower density. Dixon stated that in between there was 124 units, but this Commission did not have anything to do with that. Dixon stated that the zoning has not changed, and this amendment meets the requirements for the zoning, but it is a PUD. Dixon stated that the PUD involves additional criteria and they get to look at building design, amenities, etc. Dixon recalls a meeting a couple of years ago, and part of the public testimony as people were parking on Pancheri. Dixon stated that there is likely a parking problem. Dixon asked City Planning to go out and look at night when everyone is home and get a feel for the parking situation. Dixon believes that they adopt standards that are developed in other parts of the Country for little parking spaces and the big vehicles don't fit, and likely a fewer number of spaces per residence than is typical around this are. Dixon believes there might be a need to update the overall parking requirements. Dixon stated that there is single family residential on the north and east, multi- family to the west and south and this development starts higher density on the south (already developed as townhomes) and proceeds after it twin homes and now the request is to take the north end to higher density next to the single family residential. Dixon stated that the other change is that the north access into the development has the main way in going past the twin homes to get to the townhomes, which is opposite of what they try to do, by putting the higher density next to collector. Dixon stated that fundamentally 172 versus 154, but functionally on the ground there are some differences and is the higher density in the wrong place for the traffic patterns.

Swaney stated that this Commission will make a recommendation to City Council in regard to this request for the amendment to the PUD. Swaney stated that the recommendation needs to basically consider this history which is kind of spotty because it appears that the latest amendment was in July 2019 and in 6 months, they decide that what they requested in July is no longer a valid approach to the PUD. Swaney doesn't feel that the quick changes represent a lot of deliberation or consideration especially as 5 of the 6 units have been sold. Swaney doesn't believe it is consistent with the developer's story that there is no demand for the twin homes. Swaney stated that the Community Development Department because of the ordinance was allowed to approve the amendment for the reduced density, but now that the density will increase, the amendment has to come before the Commission, and then be approved by City Council. Swaney believes the amendment meets the requirements of the ordinance for the planned unit development and he doesn't think the amendment makes sense. Swaney believes the Commissioners should recommend to the Mayor and City Council to not approve the amendment to the PUD until there is more substantive demonstration by the developer to support their contention that its adverse to their property interest to now allow them to build the townhomes.

Hicks agrees with what has been said and doesn't think the tandem parking helps and only supports cars on the street. Hicks stated he has gone to check on thigs that they have passed, and he finds in most of them they are overcrowded with parking. Hicks would not approve this based on the fact that there is not adequate parking.

Black stated that the developer asked for the change in July 2019. Black stated that they always state that they cannot be held responsible for what residents are told and the recommendation is to check with the City, and if someone checked with the City this would show the PUD as having the first section as townhomes and the second as duplexes, but if they are quickly in 6 months changing how can someone stay current with what the City is showing. Black hesitates where there is such a quick turnaround. Black believes the City was appropriate in approving the change to reduce the density, but now they are changing it again and its hard for resident to know what they are purchasing.

Wimborne shares some of the concerns. Wimborne doesn't believe it is unique to this project. Wimborne stated that things in her neighborhood have changed due to zoning or annexation that surprised her and she didn't expect, but its part of the process as the community grows and changes. Wimborne stated that when you buy a piece of property you can only consider the information before you and what is on record. Wimborne is concerned about how quickly the change was made. Wimborne stated that while there are things they need to consider with parking in the future, at this time the ordinance is set, and this PUD meets and exceeds the parking requirements. Wimborne stated that the possible need for a revision to the parking requirements cannot be considered for this amendment. Wimborne stated that at this point this development meets the requirements. Wimborne stated that they approved 172 units and now they are requesting 154. Wimborne is concerned about the changes being discussed with potential property owners before they were made official. Wimborne stated that it makes this difficult. Wimborne stated that the process that changes were made that the Commission wasn't involved with and now there are other changes that are more difficult to decide and that puts this Commission in a bad spot. Wimborne believes they have to work within the framework that is in front of them.

Swaney disagrees with Wimborne and stated that PUD they have a unique situation as they are controlled by the Mayor and City Council and they can deliberate and determine, even though an amendment may seem reasonable and meet the ordinance, they can choose to reject that because their perception of how the PUD should be implemented can be based upon their perception alone, and if they don't like the amendment, they can still reject the amendment to the PUD.

Swaney moved to recommend to the Mayor and City Council to reject the Amendment as proposed by the developer on the basis that they have an approved amendment that was submitted in July 2019 and there needs to be more discussion between the developer and the Community Development Department of the appropriateness and the best way to continue with this PUD, and there is no indication that they are suffering either financially, or suffering any adverse consequences to the developer to continue development of the PUD with the twin home concept, Black seconded the motion and it passed 5-3.

Denney opposed the motion. Denney indicated that she wanted a split decision and she wants City Council to debate this amendment. Denney was in this area last weekend and there were three guests at a townhome and they each drove a car, and there was no parking, and that is understandable. Denney stated that according to the current ordinance, the PUD has more than enough parking spots. Denney bought her house in 1991 after working for 5 years and saving to get out of the apartment, and the only thing she could afford was the "hood". Denney stated that Idaho Falls needs townhomes and twin homes. Denney is to the point where she doesn't want to do yard work any more and she will likely soon downsize to a twin home or a townhome. Denney believes there is a need for a mixture, and not all people can afford custom homes, and would appreciate more twin homes and townhomes.

Dixon opposed the motion. Dixon wanted a split decision and wants City Council to make the decision. Dixon opposed the motion because they previously approved a higher density than is currently being requested. Dixon is concerned with the idea that they are fluctuating the density and amendments. Dixon is also concerned that the road access to the higher density is via the lower density. Dixon is split and is glad that the decision is split.

Wimborne opposed the motion. Wimborne indicated that everyone has a vision of what they want the community to look like and everyone plays different roles. Wimborne believes it is difficult if they are trying to forecast what the market can bare and what property prices should be and what kinds of homes should be built. Wimborne stated that it a split decision. Wimborne believes the process is muddy with the change that happened in July 2019.

Proposed Amended Site Plan

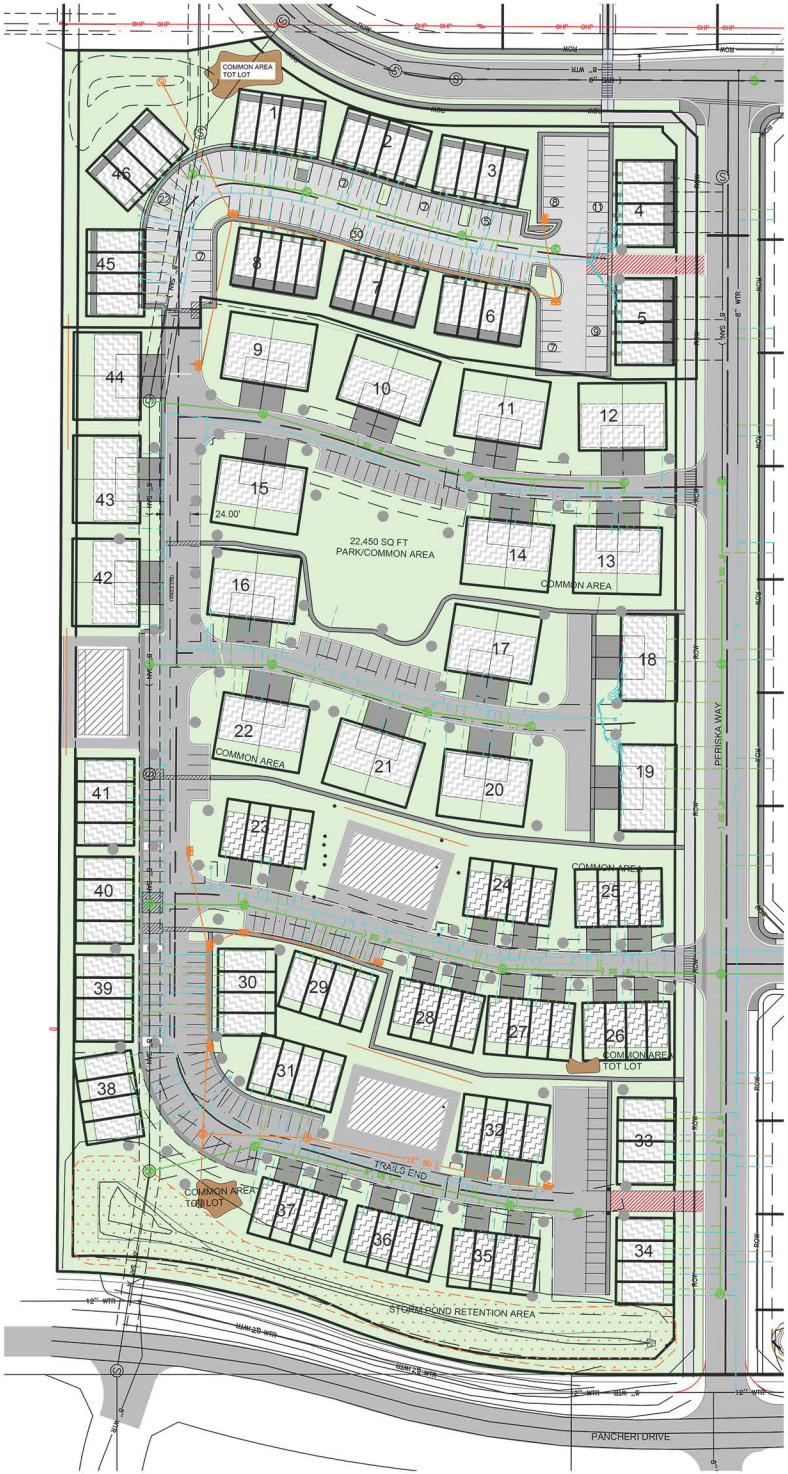

2016 Approved Site Plan

Site Plan

BUILDING SIZES	
BLDG NO.	SIZE
1-3	44'X80'
4-5	40'X80'
6-15	44'X88'
16-17	40'X80'
18-23	44'X88'
24-25	44'X80'
27-29	40'X80'
30	44'X80'
31-32	40'X80'
33-35	44'X80'
36-42	40'X80'
43	44'X80'

IDAHO FALLS

Planning Division
City Annex Building
680 Park Ave.
Idaho Falls, ID 83402
(208) 612-8276

Phasing Plan

BUILDING SIZES	
BLDG NO.	SIZE
1-3	44'X80'
4-5	40'X80'
6-15	44'X88'
16-17	40'X80'
18-23	44'X88'
24-25	44'X80'
27-29	40'X80'
30	44'X80'
31-32	40'X80'
33-35	44'X80'
36-42	40'X80'
43	44'X80'

IDAHO FALLS

Planning Division
City Annex Building
680 Park Ave.
Idaho Falls, ID 83402
(208) 612-8276

LINDEN TRAILS TOWNHOMES

2018 Amended Site Plan

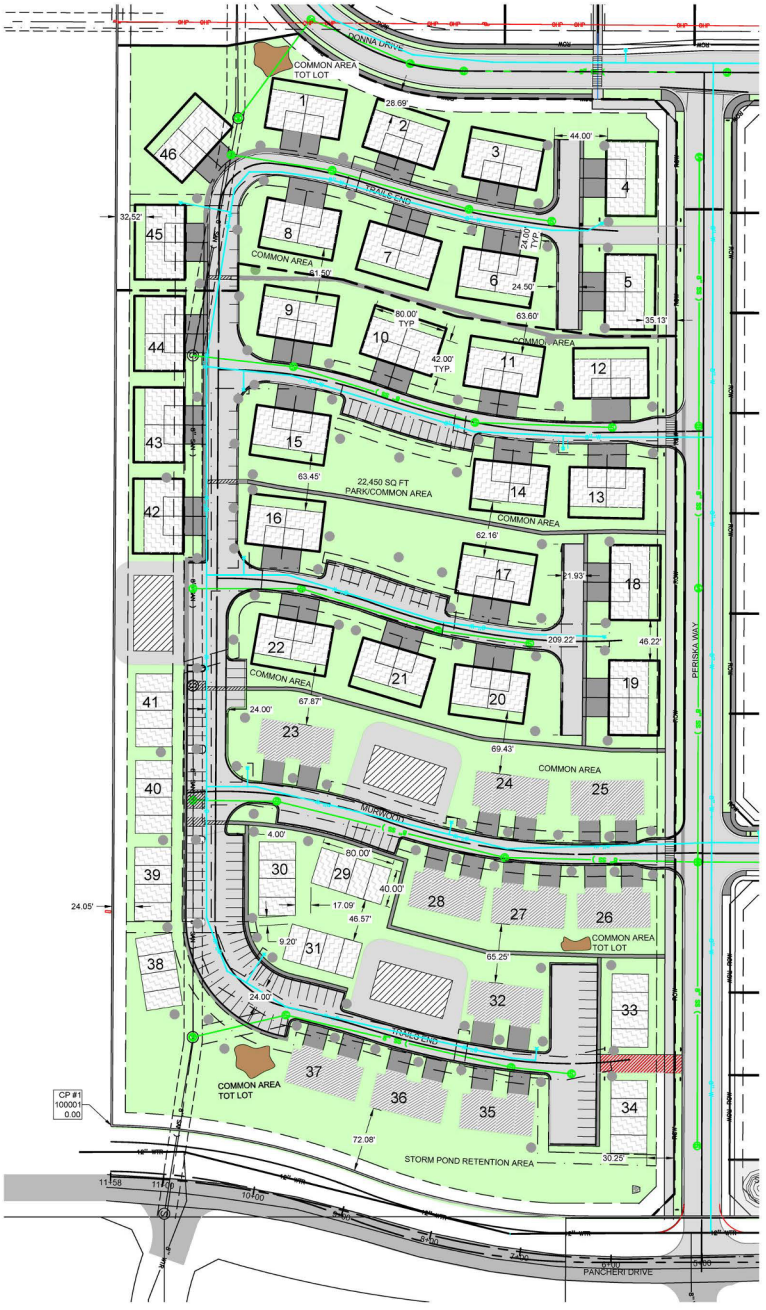

We, the people who reside within 0.5 mile of the proposed zone change to the Linden Trails neighborhood, object the proposed zone change PUD16-005, Planned Unit Development, Linden Trails Townhomes.

When the Linden Trails Development began to sell homes in 2018 the attached neighborhood layout was advertised to potential buyers. The idea of the neighborhood was a community in which many people in all stages of life could be a part of from the townhomes, to the twin homes, to the single family homes this neighborhood would create a great place to live. With the changes proposed in PUD16-005, Planned Unit Development, Linden Trails Townhomes many of the 20 twin homes that were originally promised to the subdivision would become 40 townhomes.

While there are many concerns faced by the community with the rezoning there are two major concerns. The first is an impact in traffic and road safety. The first section of townhomes in the neighborhood have been built and now resided in. There is a lack of necessary parking for the townhomes this makes snow removal for the HOA and the city more difficult. The expansion of townhomes in the neighborhood would also create an influx of people and therefore drivers which increases traffic beyond the original plans and intent of the development. The second concern is the issue that change is being proposed after the development of the neighborhood is in process. The documents attached below were advertised to the property owners of this development. This rezoning would drastically change the layout of the subdivision and therefore undermine the contracts signed by the current homeowners.

The notice that was posted did not make clear that there was going to be a change to these lots and was challenging to access given that it was on a path in the snow which is not being maintained by the property owner Dennis Hourany

Signature	Full Name	Home Address	Phone Number
H Wayne Van	Eso H Wayne	783 Peeka Way	208-357-4285
[illegible]	Cody Daniel Morris	802 Trails End	208 520-4434
[illegible]	Darrow Felsted	764 Trails End	208-497-8904
Savannah Kezele	Savannah Kezele	782 Trails End	480-310-6904
[illegible]	Tiffany Richel	780 Trail End	208 520 0895
[illegible]	Hanna Morzenti	744 Trails End	208-313-2759
[illegible]	Peter C. Miller	764 Trails End	208-313-8195
Brittany Barton	Brittany Barton	740 Trails End	801-623-3671

Karen Valrie	Karen Valrie	726 Trailsend	208-821-4721
Wendy Henn	Wendy Henn	724 Trailsend	208-716-3984
Shelby G	Shelby G.	2885 Murwood	208-881-4398
Thesa Arrowsmith	Thesa Arrowsmith	2881 Murwood	208-997-9642
Lori Neff	Lori Neff	2861 mur	208-785-6093
Taylor Hauck	Taylor Hauck	535 Barwood	208-569-7610

A Letter of Opposition to the Proposed Linden Trails Amendment

February 2020

Sarah Hamilton

Table of Contents

Letter to the Idaho Falls City Council and Mayor	2
Appendix A-Neighborhood Map	5
Appendix B-Land Use Plan Approved by Idaho Falls	6
Appendix C-Parking Problems in Existing Townhomes	7
Appendix D-Proof of Market Support	9
Appendix E-Alternative Housing in West Idaho Falls	10
Appendix F-Advertised Future Developments	11
References	12

Letter to the Idaho Falls City Council and Mayor

Hello, my name is Sarah Hamilton and I am the owner and resident of 2830 Blackwood, Idaho Falls, ID, Lot 103 in the Linden Trails Planned Unit Development (PUD). I am writing to you today in opposition of the proposed changes to the PUD which include replacing a section of the twin homes (duplexes) with townhomes. As someone who lives in the twin home on the edge of the proposed change, this amendment would negatively impact my property value, my daily life and the overall appeal of the neighborhood.

To provide some context, I have provided a map of the neighborhood in Appendix A. The twin home that is circled in red is my home. As you can see from the map of proposed changes, my property backs right up to the proposed townhomes. My home is a single-story building that would be dwarfed by the two-story townhomes that would border my backyard. Having such a large and dense population behind my home would greatly decrease my property value as well as the joy I get from owning a home here. As shown on the map in Appendix A, the red curves represent the new traffic pattern. The small fire access road is meant to be for emergencies and not the primary egress and ingress route. That means that my street would not only be the main egress/ingress for the other twin homes on Elmwood, but it would also be the main egress/ingress route for the new, densely populated group of townhomes. The proposed changes double the population of the area in question and would greatly increase traffic down my street. According to the City of Idaho Falls Comprehensive plan, the city has a standard that demands that “high-density housing should be located closer to arterial and collector streets”. The proposed amendment violates this city standard. Traffic should flow from high density to low density instead of sending the high density of people through a low-density area.

The city of Idaho Falls has dedicated a lot of time and effort to planning the future cityscape to best benefit it’s residents. According to the Land Use Plan (shown in Appendix B), our neighborhood (circled in red) is designated to be a low-density area. Building more high-density townhomes in our neighborhood violates the city’s land use plan and therefore should not be approved (City of Idaho Falls, 2013). There are designated areas in Idaho Falls for high density that were determined based on geography, existing city landscape, and other factors such as access and emergency services. The proposed amendment may seem to mirror the originally planned development, however, I assure you that the twin homes already in place significantly change the overall plan and flow of the neighborhood. It is not a matter of overall density that is the issue, it is the placement of that density that has significantly changed with regard to the rest of our area. Our neighborhood was never designed to hold high density housing and approving more further violates the overall city plan.

As the local government of Idaho Falls, you have a legal obligation to your constituents to protect property values. According the an amendment made to the Local Land Use Planning Act, amended in 1995, the amendment requires the City of Idaho Falls “prepare steps to ensure land use policies, restrictions, conditions, and fees do not violate private property rights, adversely impact property values or create unnecessary technical limitations on the use of property” (City of Idaho

Falls, 2013) Permitting townhomes to be built right on the border of my property with such a high density and limited traffic access will significantly impact my property values. A study done by the University of Montana concluded that high density populations do tend to decrease the property values of surround low density homes (Mullins, 2001). Data analyzed by American Community Survey found that these high concentration areas can lower property values up to 14% on a national scale (Pan, 2016). There is outstanding proof that high density housing lowers property values and it is your responsibility as legislators to protect those values. I understand that the proposed changes is technically less dense than the original proposal but you have to understand that the previous plan did not have twin homes that would be affected by the population change. Originally, it was all townhomes and therefore, the existing townhomes would not lose value because of more townhomes. However, the twin homes are significantly different in terms of pricing and population and therefore, would be devalued by the proposed amendment.

I have several concerns about the proposed parking changes based on the current parking situation of townhomes that are already occupied. The current townhomes do not have nearly enough parking as demonstrated by Appendix C. Many residents are resorting to parking in fire lanes, in tandem spots with the external garages, and snow-covered spots because the development simply does not have enough parking. I understand that the development meets the city minimum requirement of two spots per unit, but that includes the tandem parking with some of the units. Also, two spots may sound like enough, but on holidays, birthdays, and get togethers, parking can become a significant issue and furthermore a safety issue. People are parking in fire lanes because they cannot find parking. This is a safety issue and if the city approves more townhomes, not only will people be blocking fire lanes by the townhomes, they will also be parking on my street which is also a fire lane. Periska Way will also become riddled with cars parking on the street which is right outside my house. I understand that the city cannot be responsible for people's poor parking decisions, but if we approve changes that do not provide enough parking, it will put the neighborhood at risk.

At the Building and Zoning Public Hearing, New Earth Development claimed that they need to switch the PUD plans because the market no longer supports the twin homes. However, there is substantial evidence to suggest otherwise. For one, 5 of the 6 completed units were sold before they were even finished. No advertising besides two small flags in the neighborhood have been done to sell these units and yet they sold faster than they could finish them. The only unsold twin home is currently being used as a model home. My home was originally intended to be the model home but I had to convince the builders to sell it to me. For two, I inquired on June 11th on whether the price of the twin homes were negotiable, and in Dennis Hourany's own words (seen in Appendix D), the market supports their pricing and they are experiencing "brisk sales". Denying New Earth Development's amendment to the PUD will not cause them any financial hardship or lack of sales but approving it could cause financial hardship on the homeowners who bought their home at prices they thought to be acceptable for the area.

Dennis has also claimed that the twin homes do not provide affordable housing options to young families. I purchased this twin home at 22 years old. It is not out of reach for young people or empty nesters, of which Idaho Falls has many of. It is no secret that Idaho Falls is having a housing boom and that we are in need of more housing. The approve twin home plan can fulfill that need

while maintaining the integrity of the neighborhood. On the west side, there is a good amount of affordable housing as well as higher end single-family homes. On Appendix E, I circled areas of affordable housing in green (with housing selling for less than $220,000 or rentals) and higher end single family homes in blue (with housing selling for $290,000 or more) according to Zillow. What Idaho Falls really needs is a middle ground of affordable housing that allows for lower density but still not at the price point of single-family homes. The twin homes are the perfect compromise. They are low maintenance but still private housing, perfect for young couples and empty nesters. Should the city approve this amendment, they would be robbing Idaho Falls of the opportunity to have private, low maintenance, affordable housing on the west side.

When I bought my house on August 2nd, I spent my savings and acquired a mortgage because I thought I understood what the neighborhood would look like and could estimate how my house would appreciate over time. The development plan that I was shown ever since I put in my offer in June 2019, was the map that is shown in Appendix F (my property is still circled). The price that I paid for my property was based on this original layout and the perceived appreciation of the property. For New Earth Development to change the plans within 6 months of their last amendment feels like bait-and-switch. Had I known that they were going to change the layout of the neighborhood, I definitely would not have paid the inflated price for the property that I did, and I probably would not have purchased my property at all. I understand that neighborhoods grow and change and that is just a part of being in a rapid growing city, but to have owned my home for such a short time and already have the plans switched under my nose makes it feel like I was lied to by the builder in the buying process. I have also come to find out that the builders did not have my home approved by the city until July 2019 which means they must have started and almost finished my home without the city's approval for the PUD amendment. The city, of course, cannot be responsible for a developer's questionable business ethics, but they do have an opportunity to serve their constituents and protect residents from predatory business practices.

It is for all these reasons and many more that I ask the city council and mayor to deny the amendment to Linden Trails because the current plans will not cause a financial hardship on New Earth Development, but the changes will cause significant hardship on the property owners of the neighborhood. Parking, fire safety, traffic, snow removal, and noise pollution will all become a substantial burden on the neighborhood and its residents. The beauty of a Planned Unit Developments is that even if a proposed change meets all the minimum requirements, it is still at the discretion of the city to decide whether the changes are right for the city and its residents. I ask you as the people in power, to protect your constituents from an out-of-state developer who wants to devalue our homes and overcrowd our neighborhood because it is a quicker way for them to acquire wealth at the expense of Idaho Falls. Thank you for your time and I hope that you will strongly consider denying the proposed amendments.

Sarah Hamilton
Idaho Falls
847.452.2179
sarahhamilton423@gmail.com

Appendix A-Neighborhood Map

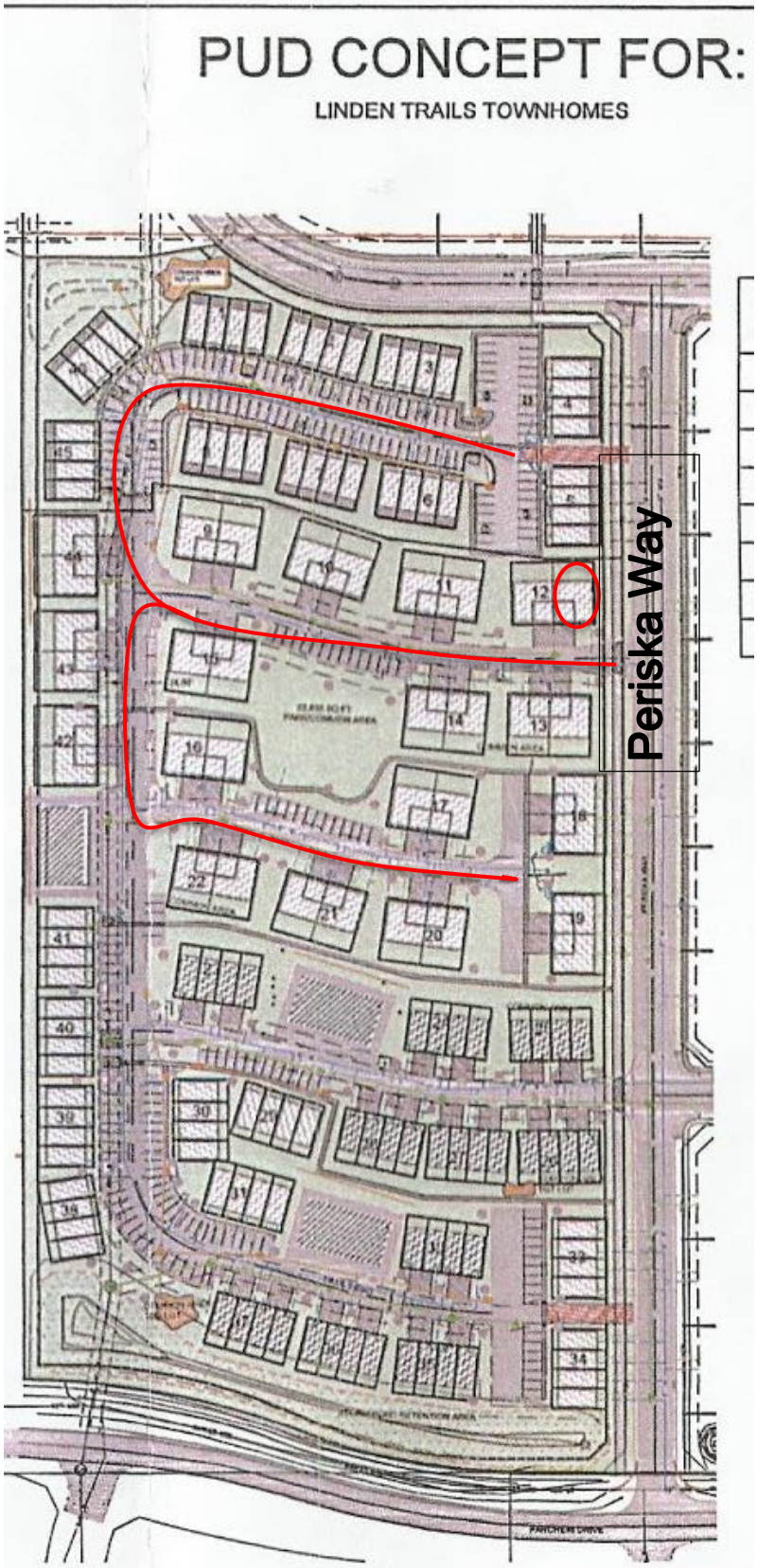

Appendix B-Land Use Plan Approved by Idaho Falls

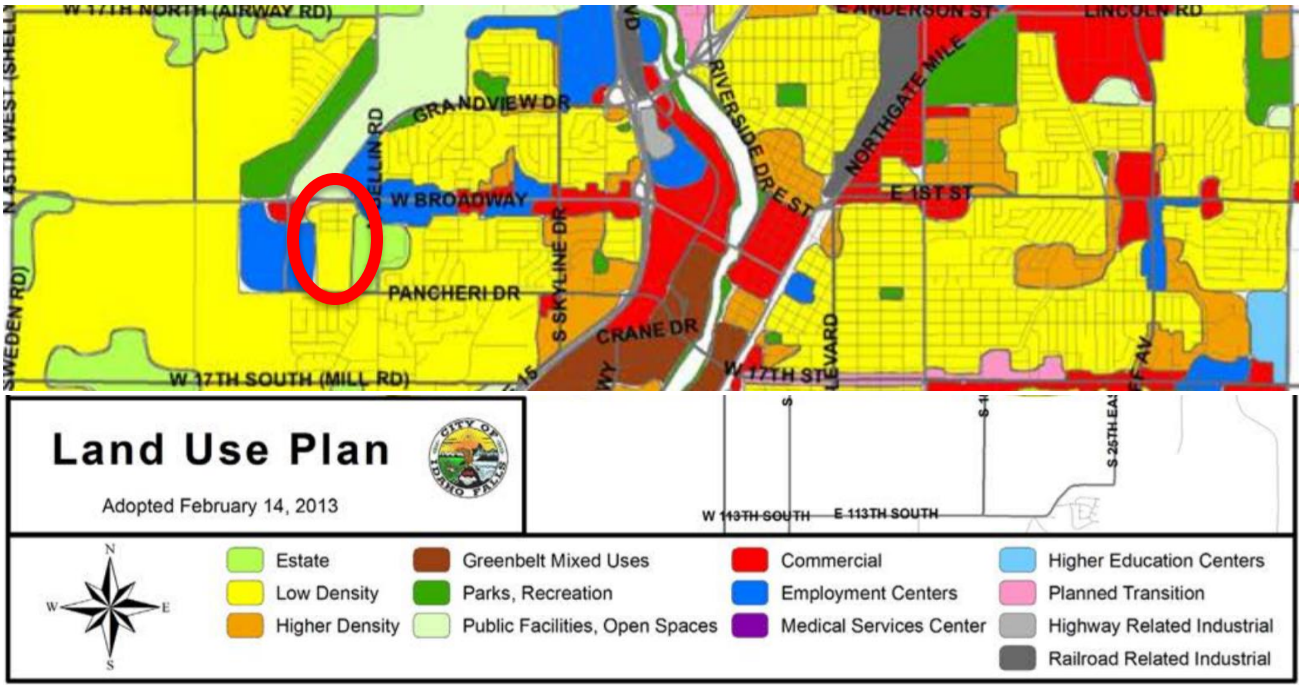

Appendix C-Parking Problems in Existing Townhomes

1: Car parked in fire lane due to parking shortages

2: Car parked in fire lane due to the lack of parking

3: Townhome residents resorting to tandem parking in front of the external garages due to parking shortages

4: Car parked in a fire lane due to lack of parking

Appendix D-Proof of Market Support

Dennis Hourany <dennis@newearthdevelopment.com> Tue, Jun 11, 2019,
to me, Ottilia

Hi Sarah,

Here are the answers to your questions.

Both units in the model building are anticipated to be completed and ready for move-in 7/31/19, notwithstanding, financing contingencies.

The unit next to our model is already sold, so the idea of taking one and leaving one for the model, although a good one, isn't doable in this case.

We've included gas and electric hookups for range and dryers.

The furnace is gas.

Washer/dryers are not included, but hookups are.

The HOA is the same as the townhomes. Monthly dues are $150. They cover snow removal, landscape maintenance and building insurance.

Idaho Falls Power is the local power company. Their rates are very competitive.

We are firm on our pricing. We find that the market supports this through the brisk sales we are experiencing.

Hopefully this will help in the decision process.

Dennis Hourany
New Earth Development, Inc.
P.O Box 14856
Jackson, WY 83002

Appendix E-Alternative Housing in West Idaho Falls

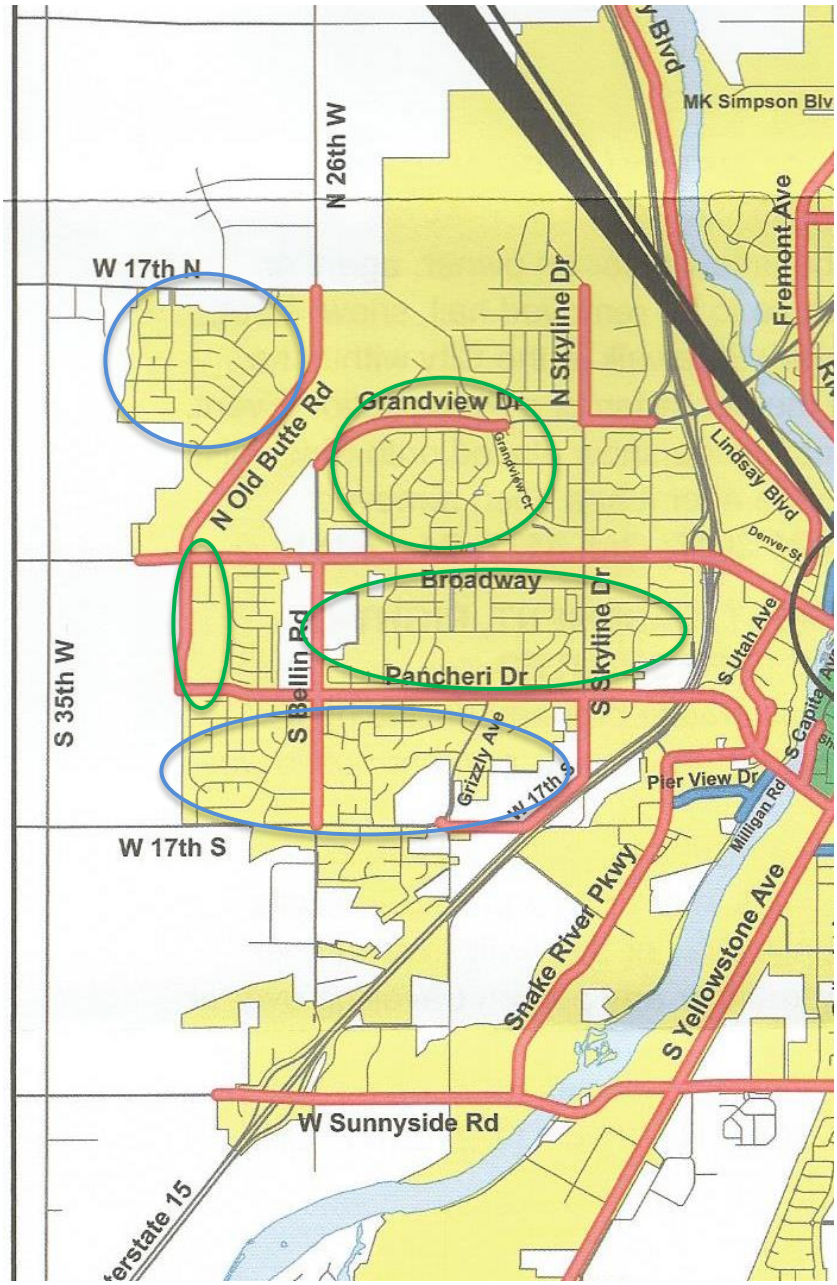

5:Green is affordable housing and blue is higher end housing

Appendix F-Advertised Future Developments

References

Mullins, E. B. (2001). *Effects of residential zoning density on housing price.* From ScholarWorks: https://scholarworks.umt.edu/cgi/viewcontent.cgi?article=6318&context=etd

Pan, Y. (2016, March 28). *The Neighborhood Features That Drag Down Your Home Value—Ranked*. From realtor.com: https://www.realtor.com/news/trends/things-that-affect-your-property-value/

From:	Ann Peterson
To:	Kathy Hampton
Subject:	FW: City Council Meeting 2/13/2020
Date:	Tuesday, February 11, 2020 8:59:03 AM

Brad asked me to send this to you to include in the packet for the PUD.

Have a great day!

From: Isaac Houck <isaachouck@gmail.com>
Sent: Monday, February 10, 2020 6:58 PM
To: Ann Peterson <apeterson@idahofallsidaho.gov>
Subject: City Council Meeting 2/13/2020

CAUTION: This email originated from outside of the organization. Do not click links or open attachments unless you recognize the sender and know the content is safe.

I would like this addition to be considered as a written comment for the PUD16-005.

Please make sure each member of the City Council gets a copy of this.

Sorry for multiple attachments scanner can only do 1 page at a time.

Thanks,
Isaac and Taylor Houck

Petition in Objection of the Proposed Change to PUD16-005

We, the people who reside within 0.5 mile of the proposed density change to the Linden Trails neighborhood, object the proposed density change PUD16-005, Planned Unit Development, Linden Trails Townhomes.

When the Linden Trails Development began to sell homes in 2018 the attached neighborhood layout was advertised to potential buyers. The idea of the neighborhood was a community in which many people in all stages of life could be a part of from the townhomes, to the twin homes, to the single family homes this neighborhood would create a great place to live. With the changes proposed in PUD16-005, Planned Unit Development, Linden Trails Townhomes many of the 20 twin homes that were originally promised to the subdivision would become 40 townhomes.

While there are many concerns faced by the community with the proposed changes there are two major concerns. The first is an impact in traffic and road safety. The first section of townhomes in the neighborhood have been built and now resided in. There is a lack of necessary parking for the townhomes this makes snow removal for the HOA and the city more difficult. The expansion of townhomes in the neighborhood would also create an influx of people and therefore drivers which increases traffic beyond what was advertised to current homeowners in the neighborhood. The second concern is the issue that change is being proposed after the development of the neighborhood is in process. The document attached below shows the advertised plan to the property owners of this development. This change would drastically change the layout of the subdivision and therefore undermine the contracts signed by the current homeowners.

Signature	Full Name	Home Address	Phone Number	House Type
H. Wayne Van Es	HARLAN WAYNE VAN-ES	783 PORISTA WAY	208-357-4222	☐Single Family ☐Twin Home ☐Town Home
[illegible]	TYE L BERGESON	2831 BLACKWOOD DR. IDAHO FALLS ID 83402	626-688-3239	☐Single Family ☒Twin Home ☐Town Home
Gretchen Peterson	Gretchen R. Peterson	2839 Blackwood Idaho Falls ID	208-317-9133	☐Single Family ☒Twin Home ☐Town Home

Signature	Full Name	Home Address	Phone Number	House Type
Allison Cobar	Allison Cobar	2838 Blackwood	208-520-5642	☐Single Family ☒Twin Home ☐Town Home
[illegible]	Jason Gilbert	804 Trails End	2086002493	☐Single Family ☐Twin Home ☒Town Home
[illegible]	Hanna Morzenti	764 Trails End	208-313-2759	☐Single Family ☐Twin Home ☒Town Home
Rena Sommer	Rena Sommer	765 Trails End	530-320 9158	☐Single Family ☐Twin Home ☒Town Home
Savannah Kezele	Savannah Kezele	782 Trails End	480-310-6904	☐Single Family ☐Twin Home ☒Town Home
[illegible]	Darrow Felsted	784 Trails End	208-497-8904	☐Single Family ☐Twin Home ☒Town Home
Sarah Hamilton	Sarah Hamilton	2830 Blackwood	8474522179	☐Single Family ☒Twin Home ☐Town Home
[illegible]	YASIR ARAFAT	719 PERISKA WAY	4127364886	☒Single Family ☐Twin Home ☐Town Home

Signature	Full Name	Home Address	Phone Number	House Type
Taylor Houck	Taylor Houck	525 Boxwood Dr	208-569-7610	☒Single Family ☐Twin Home ☐Town Home
	Sara Seal	794 Trails End	208-351-0030	☐Single Family ☐Twin Home ☒Town Home
Hailey Savage	Hailey Savage	785 Trails End	208 530 0313	☐Single Family ☐Twin Home ☒Town Home
	Corinne Dionisio	766 Trails End	208-716-2009	☐Single Family ☐Twin Home ☒Town Home
Monica	Monica Alonso	722 Trails End	208-881-8535	☐Single Family ☐Twin Home ☒Town Home
	David Kohlschmidt	~~3940 Br~~ 2898 Murwood	208 243 6294	☐Single Family ☐Twin Home ☒Town Home
James M. Neff	James M. Neff	2861 Murwood	208-785-6093	☐Single Family ☐Twin Home ☒Town Home
	Ben Nelson	2854 MURWOOD	208-899-9836	☐Single Family ☐Twin Home ☒Town Home

Signature	Full Name	Home Address	Phone Number	House Type
Curtis Tucker	Curtis Tucker	685 Periskaway	208-821-2947	☒Single Family ☐Twin Home ☐Town Home
Barb Morgan	Barb Morgan	2833 Murwood	208 690 9752	☒Single Family ☐Twin Home ☒Town Home
Raquel Loemos Fausto	Raquel Loemos Fausto	2838 Murwood	(208) 7106838	☐Single Family ☐Twin Home ☒Town Home
Brayton Farnsworth	Brayton Farnsworth	2845 Murwood	208-716-7255	☐Single Family ☐Twin Home ☒Town Home
Judy Smith	Judy Smith	2869 Murwood	208-681-0407	☐Single Family ☐Twin Home ☒Town Home
S Grunwell	Shelby Grunwell	2885 Murwood	208 881 4393	☐Single Family ☐Twin Home ☒Town Home
Kay Hinds	Kay Hinds	744 Trails End	208-569-2817	☐Single Family ☐Twin Home ☒Town Home
Phil Ashton	Phil Ashton	742 Trails End	208 201 3425	☐Single Family ☐Twin Home ☒Town Home
Melaneet Ashton	[illegible]	742 Trail's End	208 339 0572	
Morgan Jensen	Morgan Jensen	782 Boxwood Dr.	208-397-8866	Single Family
Mike Jensen	Mike Jensen	782 Boxwood Dr.	208-357-8082	Single Family

Signature	Full Name	Home Address	Phone Number	House Type
	Ryan Caldwell	2850 Murwood	2084191931	☐Single Family ☐Twin Home ☒Town Home
	Janelle Carter	2850 Murwood	435 229 1419	☐Single Family ☐Twin Home ☒Town Home
	Amish Sebastian	2842 Murwood	208-220 6400	☐Single Family ☐Twin Home ☒Town Home
	Daisy Murdock	2841 Murwood Cl	208 351-2956	☐Single Family ☐Twin Home ☒Town Home
	Dave Barton	740 Trailsend	~~801 981~~ 801 989 2991	☐Single Family ☐Twin Home ☒Town Home
	Cody Norris	802 Trails End Lane	208 520-4424	☐Single Family ☐Twin Home ☒Town Home
	Peggy Fransen	527 Boxwood Dr.	208-521-6739	☒Single Family ☐Twin Home ☐Town Home
				☐Single Family ☐Twin Home ☐Town Home

Periska Way

REASONED STATEMENT OF RELEVANT CRITERIA AND STANDARDS

PLANNED UNIT DEVELOPMENT OF LINDEN TRAILS TOWNHOMES, LOCATED GENERALLY SOUTH OF BROADWAY, WEST OF S BELLIN RD., NORTH OF PANCHERI DR. AND EAST OF S OLD BUTTE RD.

WHEREAS, the applicant filed an application for a final plat on December 11, 2019; and

WHEREAS, this matter came before the Idaho Falls Planning and Zoning Commission during a duly noticed public hearing on January 7, 2020; and

WHEREAS, this matter came before the Idaho Falls City Council during a duly noticed public meeting on February 13, 2020 and

WHEREAS, having reviewed the application, including all exhibits entered and having considered the issues presented:

I. RELEVANT CRITERIA AND STANDARDS

1. The City Council considered the request pursuant to the City of Idaho Falls 2013 Comprehensive Plan, the City of Idaho Falls Zoning Ordinance, the City of Idaho Falls Subdivision Ordinance, the Local Land Use Planning Act, and other applicable development regulations.
2. The property is an approximate 16.79 acre parcel located generally south of Broadway, west of S Bellin Rd., north of Pancheri Dr. and east of S Old Butte Rd.
3. The property is currently zoned R2 with an approved Planned Unit Development overlay.
4. The Developer amended the PUD administratively in May of 2018 to include a mix of townhome and twinhome style units.
5. The Developer now proposes to amend the PUD further from what was approved in 2018. The proposed amendment is considered a major change and requires the same approval process as the original PUD.
6. The proposed amendment includes a total of 150 units with 116 townhome style units and 34 twinhome (duplex) type units. The PUD will continue to have both common and private space for the residences as well as meet the minimum parking requirements.
7. The PUD complies with the requirements of the Zoning Ordinance of the City of Idaho Falls.

II. DECISION

Based on the above Reasoned Statement of Relevant Criteria, the City Council of the City of Idaho Falls approved the amendment to the PUD for Linden Trails Townhomes.

PASSED BY THE CITY COUNCIL OF THE CITY OF IDAHO FALLS

THIS _____ DAY OF _____, 2020

_____

Rebecca L. Noah Casper, Mayor

IDAHO FALLS

MEMORANDUM

FROM: Brad Cramer, Community Development Services Director

DATE: Thursday, February 6, 2020

RE: Ordinance and Reasoned Statement of Relevant Criteria and Standards Rezoning Property from RP to R3, 2550 Richards Avenue

Council Action Desired

☒ Ordinance ☐ Resolution ☒ Public Hearing

☐ Other Action (Approval, Authorization, Ratification, etc)

1. To approve the Ordinance Rezoning M&B: 1.1228 Acres NW1/4 of the NW1/4 of the SW1/4, Section 28, T 2N, R 38E, from RP to R3 under suspension of the rules that require three complete and separate readings and that it be read by title and published by summary (or consider the Ordinance on the first reading and that it be read by title, or reject the Ordinance).
2. Approve the Reasoned Statement of Relevant Criteria and Standards for the Rezoning of M&B: 1.1228 Acres NW1/4 of the NW1/4 of the SW1/4, Section 28, T 2N, R 38E, from RP to R3, and give authorization for the Mayor to execute the necessary documents.

Description, Background Information & Purpose

For consideration is the application to rezone property located at 2550 Richards Avenue from RP to R3. This item was considered by the Planning and Zoning Commission at its December 3, 2019 meeting. The Commission recommended approval of rezoning the property to R2, rather than R3, by unanimous vote. Staff believes the R3 is still a more appropriate zone in terms of matching the existing zoning scheme in the area, although R2 is also supported by the principles of the Comprehensive Plan. The item is now being submitted to the Mayor and Council for consideration.

Relevant PBB Results & Department Strategic Plan

☐ ☐ ☐ ☐ ☐ ☐ ☐ ☐

Because this item is quasi-judicial, staff is not including any connections to the community-oriented results.

Interdepartmental Coordination

NA

Fiscal Impact

NA

Legal Review

NA

Rezone

M&B: 1.128 Acres NW1/4, NW1/4, SW1/4, Section 28, T 2N, R 38E

Legend

- Site
- RE
- RP
- R1
- R2
- TN
- RMH
- R3
- R3A
- PB
- DT
- CC
- LC
- HC
- R&D
- LM
- I&M
- P

Overlays

- PT
- PT&T-1
- PUD
- T-1
- T-2
- City Limits
- Area of Impact

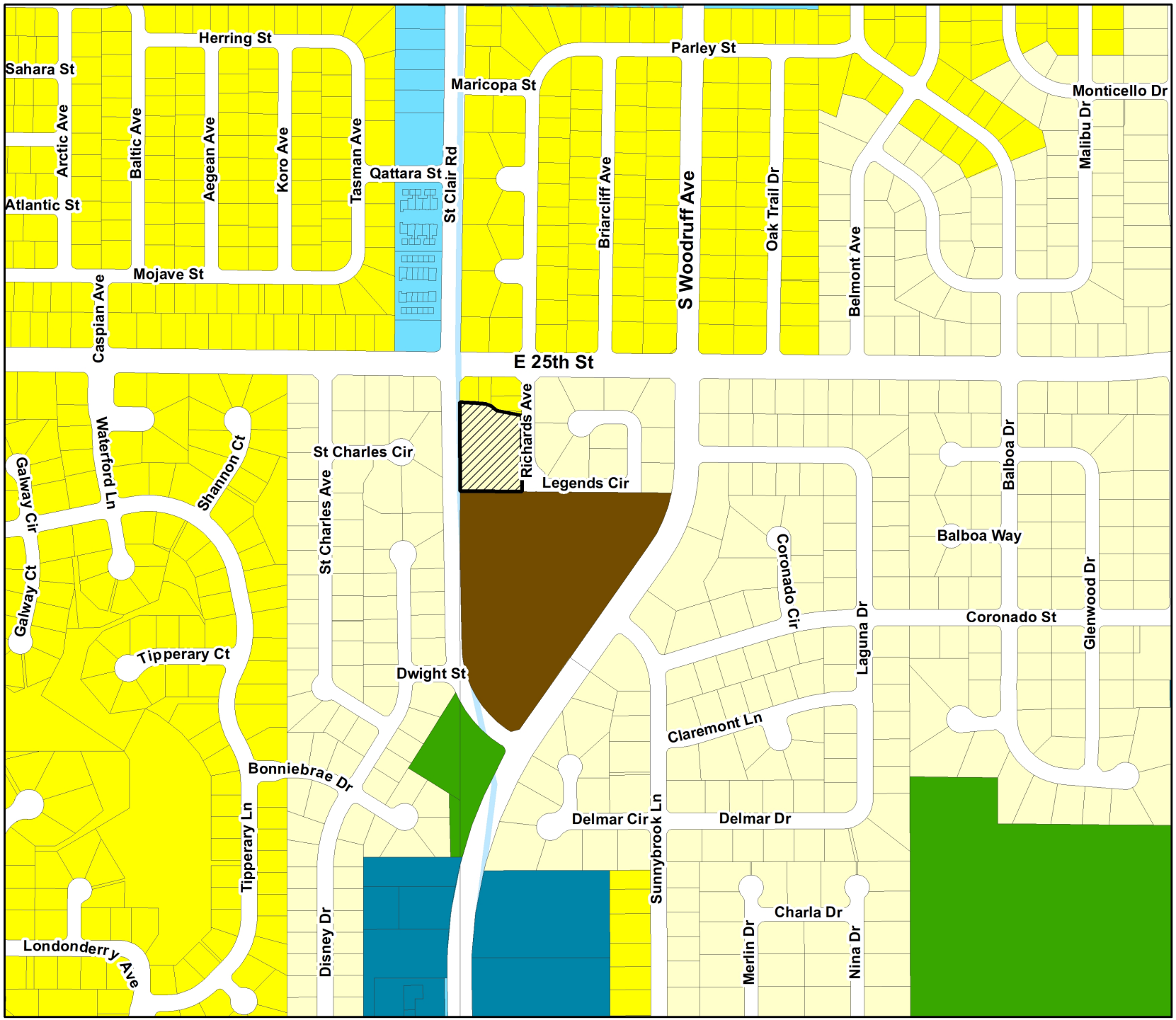

IDAHO FALLS

Planning Division
City Annex Building
680 Park Ave.
Idaho Falls, ID 83402
(208) 612-8276

N

Aegean Ave
Koro Ave
Tasman Ave
Mojave St
St Clair Rd
Briarcliff Ave
Oak Trail Dr
E 25th St
Richards Ave
Legends Cir
Laguna Dr
St Charles Cir
Shannon Ct
St Charles Ave
Disney Dr
Dwight St
Tipperary Ct
Tipperary Ln
S Woodruff Ave
Sunnybrook Ln
Coronado Cir
Coronado St
Claremont Ln

Rezone

M&B: 1.128 Acres NW1/4, NW1/4, SW1/4, Section 28, T 2N, R 38E

- Estate
- Low Density
- Higher Density
- Greenbelt Mixed Uses
- Parks, Recreation
- Public Facilities, Open Spaces
- Commercial
- Employment Centers
- Medical Services Center
- Higher Education Centers
- Planned Transition
- Highway Related Industrial
- Railroad Related Industrial

Comprehensive Plan

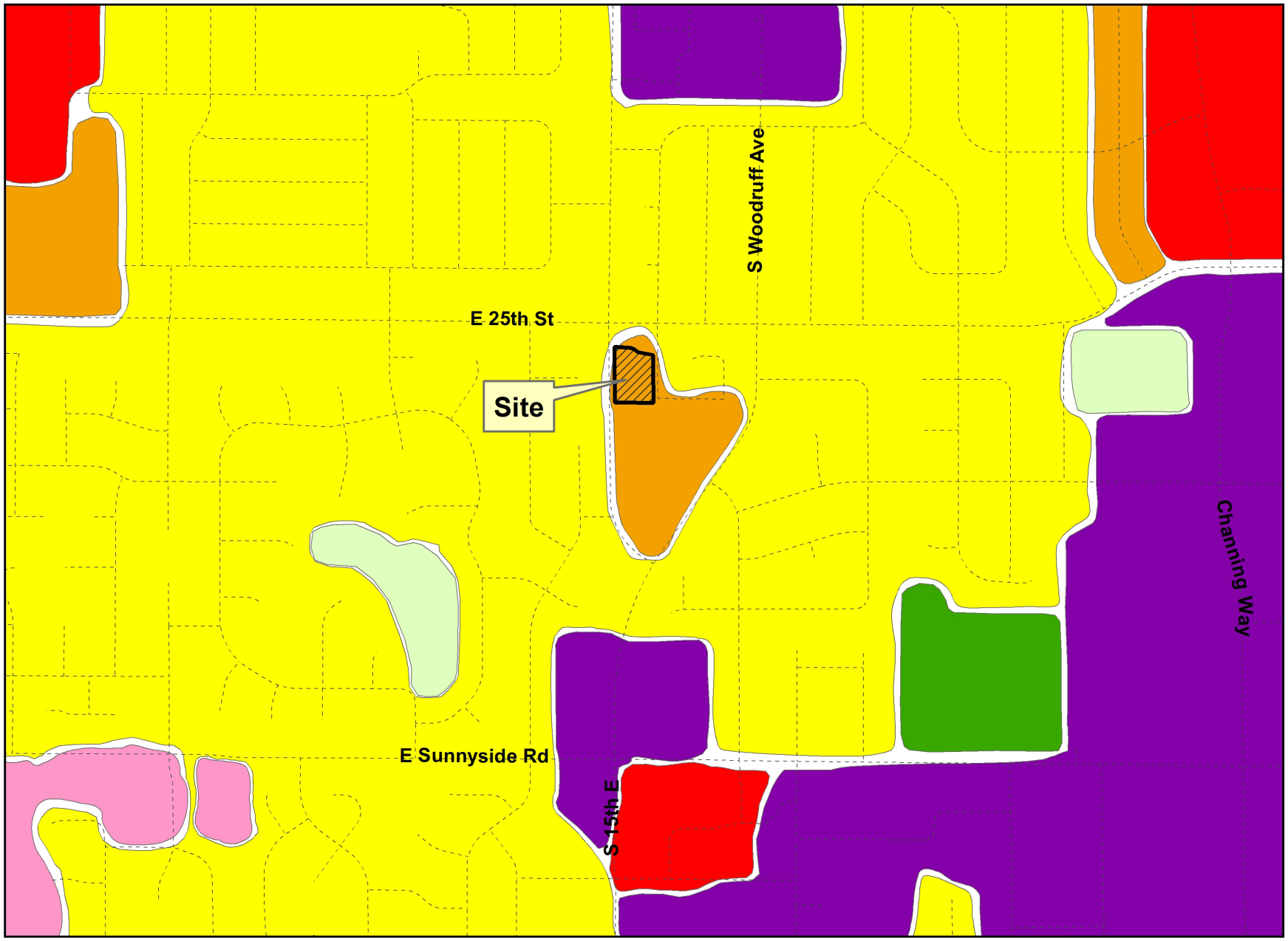

IDAHO FALLS

Planning Division
City Annex Building
680 Park Ave.
Idaho Falls, ID 83402
(208) 612-8276

N

IDAHO FALLS PLANNING AND ZONING COMMISSION
STAFF REPORT

REZONE FROM RP to R3
M&B: 1.128 Acres NW1/4, NW/14, SW1/4, Section 28, T 2N, R 38E
December 3, 2019

IDAHO FALLS
Community Development Services

Applicant: NATHAN SAUNDERS

Project Manager: Brian J. Stevens

Location: Generally south of E 25th St., west of S Woodruff Ave., north and east of St. Clair Rd.

Size: 1.128 acres

Existing Zoning:
Site: RP
North: R1
South: R3
East: RP
West: RP

Existing Land Uses:
Site: Residential
North: Residential
South: Residential
East: Residential
West: Residential

Future Land Use Map:
Higher Density

Attachments:
1. Zoning Ordinance Information
2. Comprehensive Plan Policies
3. Maps and aerial photos

Requested Action: To **recommend** approval of the rezone from RP, Residential Park, to R3, Multiple Dwelling Residential to the Mayor and City Council.

History: From our historic aerials dating back to 1954 this land appears to have been mostly vacant though it looks to once have been historic homesteads and an outbuilding for the home and operations of the surrounding property. This property was a part of a city initiated annexation in Dec of 2018. The RP zoning was selected at that time by city staff given the existing residential use and, size of the property, keeping it in conformance with the City ordinance.

Staff Comments:

The Future land us map shows this area as Higher Density Residential. The R3 zone is consistent with the Higher Density designation. This rezone would allow more flexibility to the types of residential uses that could be developed on the property.

The surrounding zoning land uses are mixed in the area. R3 is present immediately south of the parcel.

The moody canal runs along the west side of the property. Development of any kind, including single unit residential will require curb, gutter and sidewalk improvements and possibly piping the canal. Other properties along the canal have been developed at higher densities to offset the cost of improvements.

St. Clair Rd. is a major collector. The applicant will be required at time of site development to make improvements to St. Clair Rd. One entrance approach will be allowed to St. Clair Rd away from the intersection of 25th Street and St. Clair Rd. Access to Richards Ave. is also a possibility.

Staff Recommendation: To recommend to the Mayor and City Council approval of the rezone from RP to R3.

Comprehensive Plan Policies:

Residential development should reflect the economic and social diversity of Idaho Falls. New and existing developments should foster inclusiveness and connectivity through mixed housing types and sizes and neighborhood connections through paths, parks, open spaces, and streets. (Page 40)

Higher density housing should be located closer to service areas and those streets designed to move traffic, such as arterial streets and collectors, with access only to the collector street. Apartments and townhouses are located adjacent to arterial and collector streets for two reasons. Larger lots necessary for higher density housing offer opportunities for building layout, setbacks, and buffering with berms and fences to minimize the impact of street noise. If apartments and townhouses are located close to arterial streets, traffic from apartments will not move through neighborhoods. However, higher density housing should still be clustered: it should not be used to line arterial streets. (Page 43)

Higher density housing such as apartments are adjacent to collector and arterial streets. Neighborhoods should contain a variety of housing types and, with good site planning, apartments and townhouses can be near arterial streets, be directly served by collector streets, and provide an opportunity for all residents of the City to have housing which meets their needs. (Page 66)

Encourage development in areas served by public utilities or where extensions of facilities are least costly. Not only is a compact city convenient but the provision of public facilities is less expensive. Growth does not always occur at the fringe of a community. Vacant lands or underutilized parcels may redevelop to more intensive uses which use existing utilities. (Page 67)

Rezoning Considerations: Because the comprehensive plan provides only general guidance for zoning decisions, the Planning Commission shall also take the following considerations into account:

	Applicant Response
Explain how the proposed change is in accordance with the City's Comprehensive Plan.	This Area is a redevelopment area and has seen new multifamily properties. Adjacent property is zoned R3 Comprehensive plan shows this as higher Density.
What Changes have occurred in the area to justify the request for a rezone?	Redevelopment on surrounding properties of adjacent properties
Are there existing land uses in the area similar to the proposed use?	Yes, multifamily units on adjacent properties.
Is the site large enough to accommodate required access, Parking, landscaping, etc. for the proposed use?	Yes
Will a Neighborhood meeting be held prior to the Planning Commission Meeting: if Yes, Where and When:	No

Criteria for Rezoning Section 11-6-5(I) of Ordinance	Staff Comment
The Zoning is consistent with the principles of City's adopted Comprehensive Plan, as required by Idaho Code.	The Comprehensive Plan shows this area as Higher Density. The R3 Zone is consistent with the designation.
The potential for traffic congestion as a result of development or changing land use in the area and need that may be created for wider streets, additional turning lanes and signals, and other transportation improvements.	Rezoning to R3 will not result in traffic congestion or the need for wider streets, etc. Some street improvement will be a part of development of this lot.
The potential for exceeding the capacity of existing public services, including, but not limited to: schools, public safety services, emergency medical services, solid waste collection and disposal, water and sewer services, other public utilities, and parks and recreational services.	Rezoning to R3 will not have an impact on infrastructure in the area.
The potential for nuisances or health and safety hazards that could have an adverse effect on adjoining properties.	Staff is unaware of specific nuisances or hazards.
Recent changes in land use on adjoining parcels or in the neighborhood of the proposed zoning map amendment.	Adjacent property consists of R3 and the Neighborhood has received other multifamily development.

Transportation Plan:
St Clair is a Major Collector.
Richards is a Local Street

Zoning Ordinance:
R3 Multiple Dwelling Residential Zone. This zone provides a residential zone which is characterized by a variety of dwelling types with a denser residential environment. This Zone is situated along or near major streets such as collectors and arterials. It is also generally located

near pedestrian connections and commercial services.

11-2-3: ALLOWED USES IN RESIDENTIAL ZONES.

Table 11-2-1: Allowed Uses in Residential Zones

P = permitted use. C1 = administrative conditional use. C2 = Planning Commission conditional use. C3 = City Council conditional use. A blank denotes a use that is not allowed in that zone.

*Indicates uses that are subject to specific land use provisions set forth in the Standards for Allowed Land Uses Section of this Chapter.

	Low Density Residential			Medium Density Residential			High Density Residential	
Proposed Land Use Classification	**RE**	**RP**	**R1**	**R2**	**TN**	**RMH**	**R3**	**R3A**
Accessory Use	P	P	P	P	P	P	P	P
Agriculture*	P							
Animal Care Clinic					P*			P
Artist Studio					P*			
Bed and Breakfast*								P
Boarding /Rooming House							P	P
Day Care, Center*			C_2	P	P		P	P
Day Care, Group*	C_1		C_1	P	P	C_1	P	P
Day Care, Home	C_1		C_1	P	P	C_1	P	P
Dwelling, Accessory Unit*	P			P	P		P	P
Dwelling, Multi-Unit*				P*	P		P	P
Dwelling, Single Unit Attached*			P	P	P	P	P	P
Dwelling, Single Unit Detached	P	P	P	P	P	P	P	P
Dwelling, Two Unit				P	P		P	P
Eating Establishment, Limited					P*			P
Financial Institutions					P*			
Food Processing, Small Scale					P*			
Food Store					P*			
Fuel Station					P*			
Health Care and Social Services					P*			P
Home Occupation*	C_1		C_1	C_1	C_1	C_1	C_1	C_1
Information Technology								P
Laundry and Dry Cleaning					P*			P
Live-Work*					C_1			P
Manufactured Home*	P	P	P	P	P	P	P	P
Mobile Home Park*						C_2		C_2
Mortuary								P
Park and Recreation Facility*	P	P	P	P	P	P	P	P
Parking Facility								P
Personal Service					P*			P
Planned Unit Development*	C_3	C_3	C_3	C_3		C_3	C_3	C_3
Professional Service								P
Public Service Facility*	C_2	C_2	C_2	C_2	C_2	C_2	C_2	C_2
Public Service Facility, Limited	P	P	P	P	P	P	P	P
Public Service Use								P
Recreational Vehicle Park*						C_2		

Proposed Land Use Classification	RE	RP	R1	R2	TN	RMH	R3	R3A
Religious Institution*	C_2	C_2	C_2	C_2	C_2	C_2	C_2	C_2
Residential Care Facility							P	P
Retail					P*			C_2
School*	C_2	C_2	C_2	C_2	C_2	C_2	C_2	C_2
Short Term Rental*	P	P	P	P	P	P	P	P
Transite Station								P

(Ord. 3218, 9-13-18)

11-3-4: STANDARDS FOR RESIDENTIAL ZONES.

Table 11-3-1: Standards for Residential Zones

	RE	RP	R1	R2	TN	R3	R3A	RMH
Lot Area								
Lot Area Minimum in ft^2	1 acre*	12,000	7,000	6,000*	3,000*	5,000*	5,000	5,000
Lot Area Maximum in ft^2			13,500*					
Site Width								
Site Width at Front Setback, Minimum in ft.	150	60	50	50	25	50	50	50
Setbacks, Minimum in ft.								
Front	40	30*	25*	20*	15*	15	15	30
Front Maximum in ft.					20*			
Side	20	7.5/10*	6	6	5	6	6	10
Rear	40	25	25	25	10	25*	25*	25*
Lot Coverage, Building Height, and Density								
Maximum Lot Coverage in %	30	40	40	80	50	80	80	40
Maximum Building Height in ft*	24	24	24	24	*			24
Maximum Density in net units/acre	1	4	6	17	15	35	35	8
*See explanations, exceptions and qualifications in Section 11-3-4A,B,C of this Zoning Code.								

(Ord. 3218, 9-13-18)

(A) Minimum and Maximum Lot Area.

(1) In the R1 Zone, the maximum lot size shall be thirteen thousand five hundred square feet (13,500 ft^2), except for corner lots, wedge-shaped lots in cul-de-sacs, or other unusual shaped lots. This shall also not apply to conditional uses such as schools and religious institutions.

(2) In the R2 zone, seven hundred and fifty square feet (750 ft^2) shall be added to the minimum required area for each additional dwelling unit.

(3) In the TN Zone, the maximum average lot area for subdivisions approved after the adoption of this Code, April 12, 2018, shall be six thousand two hundred and fifty square feet (6,250 ft^2) in order to encourage a mix of lot sizes and dwelling types. (Ord. 3210, 8-23-18)

1969 Aerial

E 25th St
St Clair Rd
Richards Ave
1440
1480
1490
1457
1443
1473
1464
1490
1510
1520
2530
2540
2550
2560
2638
2636
2631

2016 Aerial

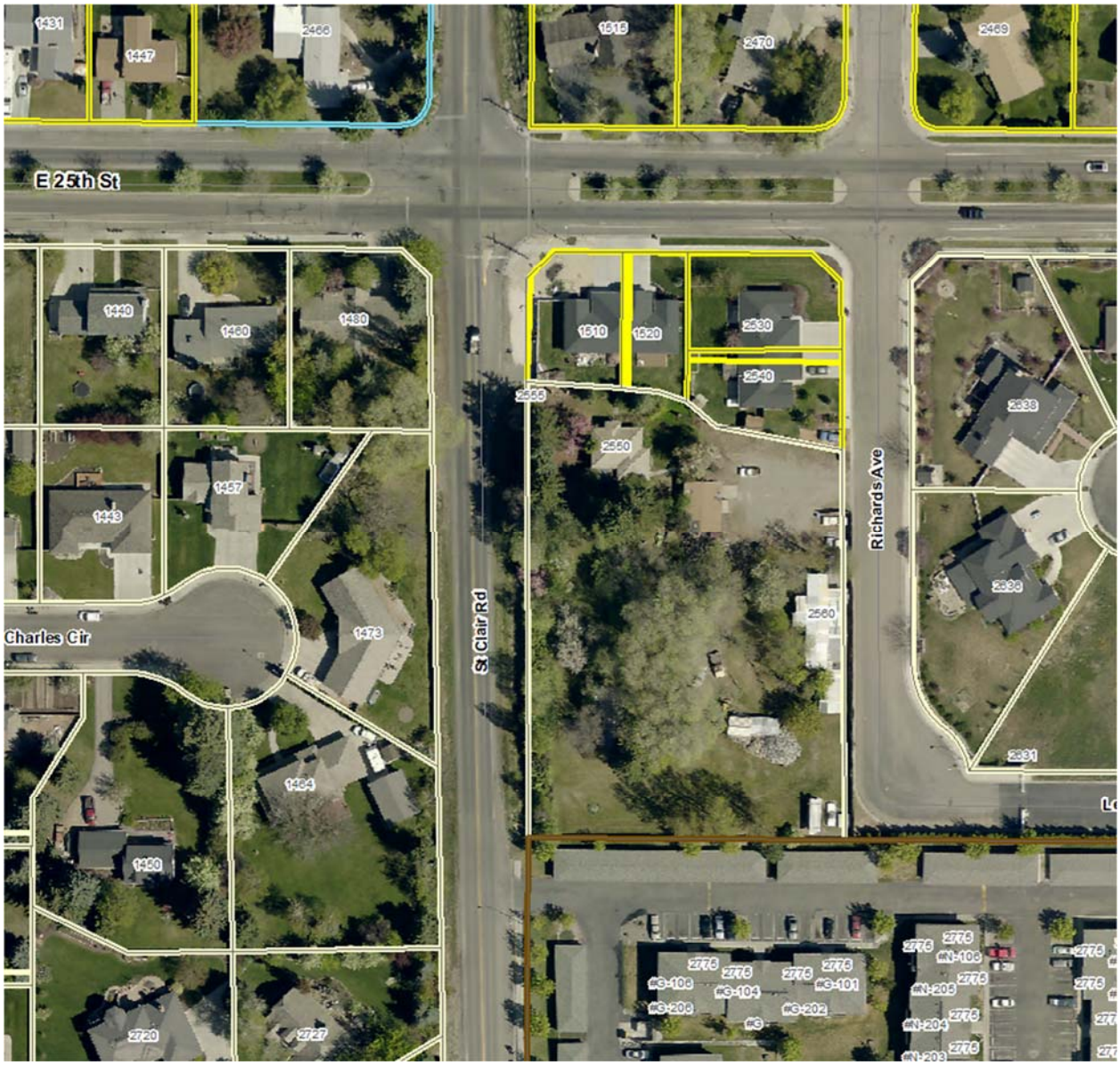
E 25th St
St Clair Rd
Richards Ave
Charles Cir
1431
1447
2466
1515
2470
2469
1449
1460
1480
1510
1520
2530
2540
2555
2550
2560
2538
2539
2531
1443
1457
1473
1464
1450
2720
2727
2776
#N-106
#N-205
#N-204
#N-203
#S-106
#S-104
#S-101
#S-209
#S-202
#S

December 3, 2019 7:00 p.m. Planning Department

Council Chambers

MEMBERS PRESENT: Commissioners Natalie Black, Joanne Denney, Brent Dixon, Gene Hicks, George Morrison. (5 present 4 votes).

MEMBERS ABSENT: George Swaney, Lindsey Romankiw, Arnold Cantu , Margaret Wimborne

ALSO PRESENT: Planning Director Brad Cramer; Assistant Planning Directors Kerry Beutler, Brent McLane and Brian Stephens; and interested citizens.

CALL TO ORDER: Natalie Black called the meeting to order at 7:00 p.m.

CHANGES TO AGENDA: None.

MINUTES: Hicks moved to approve the November 12, 2019 minutes, Morrison seconded the motion and it passed unanimously.

Public Hearing(s):

1. RZON 19-012: REZONE. RP TO R3. Stephens presented the staff report, a part of the record. Dixon asked if there are major and minor collectors. Beutler and Stephens both concurred that there are both types of collectors. Dixon asked Cramer to provide additional information on the apartment complex to the South and when that came in because he believes the Comp Plan designation of higher density came in after that complex was built and was done to be consistent with the apartment complex. Dixon believes the R3 is out of place relative to everything that is around it, and he wants more history on how the original R3 got in the area. Stephens stated that Cramer forwarded 709 pages of information and he shared that with Dixon. Stephens stated that the property was originally annexed in 1978 and brought in as R3 and the developer chose to develop around at a lower density and the R3 density developed later. Stephens stated that the hearing regarding the apartment complex was over the R3 zone, but the R3 zone existed on the property simultaneously to the other zones as it was all the same developer (Rose Neilson Plat). Stephens stated that the hearing document was over 100 pages and in his brief review it appears that the neighbors felt there was a technicality in the way the annexation and initial zoning happened because the person who sought the zones didn't own the ground at the time, so there was contention about the timing of things, but when it was said and done, as is obvious the apartments were built, so that in the end the application was upheld in Court. Dixon indicated that this hearing was the hearing he attended prior to joining the Board. Dixon asked if St. Clair was an arterial then they wouldn't allow access to St. Clair, but because it is a collector do, they encourage access to the collector for high density. Stephens stated that this property is unique infill property. Stephens stated that all of the infill properties have challenges and this property has a challenge of where they should have the primary access, and the engineer and staff believe the majority of their traffic should go onto St. Clair, although they are not opposed to a second access onto Richards. Stephens indicated that this is an item for a technical item for site plan review and not in the rezone. Morrison indicated that he disagrees with staff and believes the intersection is too busy and a multi-unit development would be too much. Beutler stated that the Access Management Plan states that if it is an arterial, they would allow access, and they allow access from commercial and high-density residential development

to arterials and the question is the spacing between access points. Beutler stated that when they go from collector to an arterial the spacing gets greater. Beutler stated that Woodruff is an arterial, St. Clair is a major collector and so the R3 is correctly placed pursuant to the Comprehensive Plan regarding high density residential. Beutler stated that the access issues on St. Clair would be an issue if the property developed as single unit residential, then there would be no access to St. Clair. Dixon indicated that the Moody Canal runs along the west side of the property and development of any kind will require curb, gutter, sidewalk improvements and possibly piping the canal. Dixon stated that the other side of the street hasn't done anything and further north there is no development along the canal until the recent higher density development behind Hallpark. Dixon asked why they are going to make this one develop to City standards if nothing else has been required to develop to City standards. Stephens assumes that across the street was likely County developed or at that point in time the City didn't have the same road sections. Beutler stated that the development that backs on to the street is single family residential and that was developed years ago, and it was not required of the developer to improve the back side of the street. Beutler stated that as development occurs along St. Clair then they do require the improvement of curb, gutter and sidewalk and this improvement will complete the section from 25th to Woodruff that has a solid connection of curb, gutter and sidewalk. Black asked why the City chose RP for the zone during the City initiated annexation. Stephens stated there was discussions on the property in what the Comprehensive Plan and what actually resided on the ground (big parcel and single residence). Stephens stated that to put the current structures in compliance with the zoning ordinance and consistent with adjacent property, they chose RP. Beutler stated that they worked with the property owner during the annexation process and at the time the intent of the owner was to maintain the single residence and RP seemed to fit with the area. Beutler stated that since the annexation, public works has determined that even development of a single residence on the property will require curb, gutter and sidewalk. Beutler stated that refurbishing the home to make it livable is challenging. Black asked what the density of housing that would be allowed in R3. Stephens indicated that 35 units per acre is allowed.

Black opened the public hearing.

Applicant: Nathan Saunders, 2550 Richards Ave. Idaho Falls, Idaho. Saunders resides on the subject property. Saunders stated that when the annexation happened, he had only owned the property for 1 day when he got the annexation notice and he had no idea what it meant. Saunders felt at the time that RP would be fine, but things have changed.

Support:

Sterling Barnes, 2031 Autumn Lane, Idaho Falls, Idaho. Barnes is working with the applicant as the developer for the property and owns some multi-family in town. Barnes believes that it is increasingly difficult to find affordable housing. Barnes has enjoyed managing the multi-family and allowing his family to help manage the property. Barnes wanted to help Saunders develop and build and own the units.

Morrison asked if there are firm plans for development. Barnes stated that they have drawn up sketch drawings, including four-plexes and possibly higher depending on the zoning and setbacks required, and improvements that are necessary. Barnes stated that what they develop will be driven by the requirements and access. Morrison asked about their thoughts on access to St. Clair and Richards. Barnes stated that they have looked at designs for both scenarios. Barnes is aware that the neighbors on Richards might not want access to their neighborhood. Barnes

stated that it might make sense to have all the access onto St. Clair. Barnes stated that they have discussed about having foot traffic access on the back side for residents to go for walks, etc.

Black reminded the Commissioners that this hearing is about the zoning and the preliminary plat will come later.

Dixon asked what the cost difference would be to develop only one road instead of both roads. Barnes stated that it can be significant as there is more frontage on the St. Clair side, and the improvements on the St. Clair side would be wider and burying the canal will be expensive, and the improvements needed on Richards are yet to be determined.

Opposed:

Davete Bogart, 2530 Richards Ave., Idaho Falls, Idaho. Bogart is concerned about the access to Richards. Bogart stated that Richards is like a cul-de-sac/dead end and they already have homes coming out onto the property. Bogart agrees with the idea of having foot access from the subject property. Bogart asked why the property has to go to R3 versus R2. Bogart feels like the property is small, and twin homes would go well on it.

Jeremy Westwood, 2644 Legend Circle, Idaho Falls, Idaho. Westwood stated that R3 and R3A have no height restrictions so the zoning of R3 or R3A leave the ability to go up and only governed by setbacks. Westwood stated that as the property increases in height the setbacks continue to grow. Westwood stated that on a 35-unit complex if they built 6 on the bottom, they could go 6 stories high on the property which would allow the tenants on the 6th floor to look into the backyard of the homeowners adjacent to the property. Westwood stated that when Teton Apartments were approved as R3, and at the time there was not an R2 designation, however, there was a compromise that they would only build 2 stories high to appease the neighborhood. Westwood doesn't believe that R3 development would be consistent with the rest of the neighborhood. Westwood believes R2 would be better. Westwood stated that Richards is a local street (minor). Westwood stated that the Comprehensive Plant doesn't allow multi-family to dump onto a local or minor street. Beutler stated that they are encouraged to not do that. Westwood stated that in the past it has not been allowed. Beutler stated that there are examples in the City that has multi-family going onto local. Beutler stated that they would recommend that they not go onto local streets. Westwood suggested having the property zoned R2 with landscape buffering onto Richards and no access onto Richards. Westwood believes it should be treated as a transition zone and R2 fits better in the area. Westwood gave the example of the rejection of the request of the rezone from R3 of the property on the corner of East Sunnyside and Springfield 2 years ago. Westwood stated that the application was rejected because it was adjacent to R1 and the height was too high, and you would be looking into the neighborhood of the adjacent properties. Westwood stated that if they were to be consistent with other decisions that Planning and Zoning has made then this property would be zoned R2 or less. Westwood stated that he does developments and helped with the development of Big Sky, Valencia and the new property on Skyline. Westwood understands the need and desire for multi-family housing in Idaho Falls, but believes it needs to be consistent with the adjacent properties. R3 or R3A is not consistent with this property and it needs to be reconsidered to R2.

Luke Stallings, 2648 Legends Circle, Idaho Falls, Idaho. Stallings asked if this decision can require the access or is that in a later process. Beutler and Black both indicated that is a later process. Stallings asked if the zoning is allowed then the discussion on access can come later.

Black stated that would go with the Preliminary Plat. Stallings asked if the preliminary plat came before planning and zoning for a decision. Beutler stated that there won't be a preliminary plat on this piece of property because of the size, so there would only be a final plat and it is not a public hearing, only a business item. Stallings confirmed that it wouldn't be open for public comment, but Planning Commission would take everything discussed here into consideration when the final plat is discussed. Stallings agrees with Westwood's assertion. Stallings stated that he and Westwood own property management companies locally and they see the need for multi-family residential. Stallings is also a local real estate agent. Stallings property borders the current R3 property. Stallings stated that with the garage buffer and the landscaping they have never been bothered by the R3. Stallings believes it is developed to an R2 standard. Stallings stated that he doesn't believe there are 35 units on a single acre on the property to the south and so 35 units on the one single lot would be a blip in the map. Stallings feels strongly that the property should be rezoned to R2 and that would fit better and would restrict what could be put on the property to fit in with what is around the property.

Applicant: Nathan Saunders. 2550 Richards, Idaho Falls, Idaho. Saunders stated that the people who testified have houses that currently look into his backyard. Saunders stated that his Great Grandfather Merlin Prestwich property and this is all that is left of the farm and his ultimate goal was to continue the development of the City. Saunders stated that they will not be more than 3 stories high. Saunders stated that Barnes has an idea with limiting the access onto Richards, along with possibly having it be lined with garages and buffer, so there aren't apartments right up along side the current houses.

Denney asked why they chose R3 over R2. Saunders stated that once they have the cost of developing the land, they want to spread it over as many units as possible. Saunders stated that he has no desire to turn the property into a metropolitan area, but wants it developed as a beautiful place for people to live.

Black asked Staff if Richards is a public street. Stephens indicated it is a local street owned and maintained by the City. Black asked about the differences between R3 and R2 including the density, parking, etc. Black asked if there is room on that piece of property for 35 units with parking and setbacks. Stephens directed the Commission to the table 11-3-4 and discussed the differences between R2 and R3. Dixon asked if the minimum set back would start behind the canal company's property or from the street. Stephens is unsure how that lies but when they go in and do the final plat the canal is on the property and when they go forward from the property line they will go back 15' so the canal could be buried in the 1st 15' of setback. Stephens stated that the setback is to protect the canal from having a structure built over top of it. Beutler stated that the canal is not a separate parcel and is part of the parcel that the applicant owns, and they have an easement or prescriptive easement and the setback would start at the property line or edge of right of way. Dixon asked about the front setback and the back setback would be based on which street they have access to. Stephens stated that if they develop with the buildings facing both streets, then they would be treated as the front. Stephens stated that if they face St. Clair, they would have a front, rear and side setback requirements. Stephens stated in multi-unit they are allowed to configure that in a flexible fashion, but likely the parking will be used for the 25' rear set back. Denney clarified that the taller the building goes the more land that is lost due to setbacks and if they have frontage on both streets, they will lose more property to build on.

Beutler clarified that they are required to landscape the 15' adjacent to both streets, not allowed to have parking within the front setback, there is a requirement for a 10' landscape buffer adjacent to the north property line, which will give restrictions to the actual buildable area. Beutler stated that it is not uncommon for multi-family to access onto a local street and both Valencia and Midwest Townhomes access onto a local road. Beutler stated that the comprehensive plan and the access management plan both encourage that they be located near collectors and near arterials, so they are not sending multi-family traffic through neighborhoods.

Black closed the public hearing.

Morrison doesn't like the access onto St. Clair that close to the corner. Morrison has reservations about the R3 zone because there are more things that can go into an R3 Zone and believes R2 would be better.

Dixon agreed with the comment about R2 and that is consistent with the Comprehensive Plan calling for higher density. Dixon stated that if this was more than 2 stories it would be the only more than two story building in the area. Dixon believes it is far enough from the corner especially because the corner is a 4 way stop. Dixon believes that having a height restriction in that area makes sense and R2 would provide the height restriction and would be consistent with the construction of the existing R3 which is constructed at no more than 2 stories and provides a buffer.

Morrison stated that the corner might not be a 4 way stop for long. Morrison stated that Richards is long and there is plenty of space to have a couple of entrances onto Richards.

Hicks agrees that it should be R2.

Dixon moved to recommend to the Mayor and City Council approval of the Rezone from RP to R2 for the property including 1.28 acres NW 1/4, NW ¼, SW ¼ Section 28, T 2N, R 38E, Morrison seconded the motion and it passed unanimously.

ORDINANCE NO._____

AN ORDINANCE OF THE CITY OF IDAHO FALLS, IDAHO, A MUNICIPAL CORPORATION OF THE STATE OF IDAHO; PROVIDING FOR THE REZONING OF 1.128 ACRES AS DESCRIBED IN SECTION 1 OF THIS ORDINANCE FROM RP ZONE TO R3 ZONE; AND PROVIDING SEVERABILITY, PUBLICATION BY SUMMARY, AND ESTABLISHING EFFECTIVE DATE.

WHEREAS, the proposed zoning district of lands described in Section 1 is R3 Zone for such annexed lands and such zoning is consistent with the current City of Idaho Falls Comprehensive Plan Land use designation "Higher Density Residential" and

WHEREAS, the proposed zoning district is consistent and compatible with the existing and surrounding zoning districts and is consistent with the City of Idaho Falls Comprehensive Plan; and

WHEREAS, Idaho Falls Planning and Zoning Commission held a duly noticed public hearing on December 3, 2019, and recommended approval of zoning the subject property to R2 Zone; and

WHEREAS, the Idaho Falls City Council conducted a duly noticed public hearing and passed a motion to approve this zoning on February 13, 2020.

NOW THEREFORE, BE IT ORDAINED BY THE MAYOR AND COUNCIL OF THE CITY OF IDAHO FALLS, IDAHO, AS FOLLOWS:

SECTION 1: LEGAL DESCRIPTION:

This ordinance shall apply to the following described lands in Idaho Falls, Idaho, Bonneville County, to-wit:

1.128 Acres of the NW ¼, of the NW ¼, of the SW ¼, Section 28, T 2N, R 38E located 2550 Richards Avenue

SECTION 2. Zoning. That the property described in Section 1 of this Ordinance be and the same hereby is zoned "R3" and the City Planner is hereby ordered to make the necessary amendments to the official maps of the City of Idaho Falls which are on file at the City Planning Department Offices, 680 Park Avenue.

SECTION 3. Savings and Severability Clause. The provisions and parts of this Ordinance are intended to be severable. If any section, sentence, clause or phrase of this Ordinance should be held to be invalid or unconstitutional by a court of competent jurisdiction, such invalidity or unconstitutionality shall not affect the validity or constitutionality of any other section, sentence, clause or phrase of this Ordinance.

SECTION 4. Publication. This Ordinance, or a summary thereof in compliance with Idaho Code, shall be published once in the official newspaper of the City, and shall take effect immediately upon its passage, approval, and publication.

SECTION 5. Effective Date. This Ordinance shall be in full force and effect from and after its passage, approval and publication.

PASSED by the City Council and APPROVED by the Mayor of the City of Idaho Falls, Idaho, this_____day of_____, 2020.

CITY OF IDAHO FALLS, IDAHO

_____
Rebecca L. Noah Casper, Mayor

ATTEST:

_____
Kathy Hampton, City Clerk

(SEAL)

STATE OF IDAHO)
) ss:
County of Bonneville)

I, KATHY HAMPTON, CITY CLERK OF THE CITY OF IDAHO FALLS, IDAHO, DO HEREBY CERTIFY:

> That the above and foregoing is a full, true and correct copy of the Ordinance entitled, "AN ORDINANCE OF THE CITY OF IDAHO FALLS, IDAHO, A MUNICIPAL CORPORATION OF THE STATE OF IDAHO; PROVIDING FOR THE REZONING OF 1.128 ACRES AS DESCRIBED IN SECTION 1 OF THIS ORDINANCE FROM RP ZONE TO R3 ZONE; AND PROVIDING SEVERABILITY, PUBLICATION BY SUMMARY, AND ESTABLISHING EFFECTIVE DATE."

_____
Kathy Hampton, City Clerk

REASONED STATEMENT OF RELEVANT CRITERIA AND STANDARDS

REZONE OF PROPERTY LOCATED M&B: 1.128 Acres NW1/4, NW1/4, SW1/4, Section 28, T 2N, R 38E.

WHEREAS, the applicant filed an application for Rezone on October 21, 2019; and

WHEREAS, this matter came before the Idaho Falls Planning and Zoning Commission during a duly noticed public meeting on December 3, 2019; and

WHEREAS, this matter came before the Idaho Falls City council during a duly noticed public meeting on February 13, 2020; and

WHEREAS, having reviewed the application, including all exhibits entered and having considered the issues presented:

I. RELEVANT CRITERIA AND STANDARDS

1. The City Council considered the request pursuant to City of Idaho Falls 2013 Comprehensive Plan, the City of Idaho Falls Zoning Ordinance, the City of Idaho Falls Subdivision Ordinance, the Local Land Use Planning Act, and other applicable development regulations.
2. The property is approximately 1.128 acres located generally south of E 25th St., west of S Woodruff Ave., north and east of St. Clair Rd.
3. Surrounding properties are zoned residential R1, RP, and R3.
4. The Comprehensive Plan designates this area as Higher Density.
5. The Idaho Falls Planning and Zoning Commission recommended approval of this request with a recommendation of R2 Zoning instead of R3 Zoning.

II. DECISION

Based on the above Reasoned Statement of Relevant Criteria, the City Council of the City of Idaho Falls approved the Rezone as presented.

PASSED BY CITY COUNCIL OF THE CITY OF IDAHO FALLS

THIS _____ DAY OF _____, 2020

_____

Rebecca Casper - Mayor

IDAHO FALLS

MEMORANDUM

FROM: Brad Cramer, Community Development Services Director

DATE: Thursday, February 6, 2020

RE: Subdivision Ordinance Amendments

Council Action Desired

☒ Ordinance ☐ Resolution ☒ Public Hearing

☐ Other Action (Approval, Authorization, Ratification, etc)

To approve the Ordinance amending City Code Title 10, under suspension of the rules that requires three complete and separate readings and that it be read by title and published by summary (or consider the Ordinance on the first reading and that it be read by title, or reject the Ordinance).

Description, Background Information & Purpose

For consideration are changes to the Subdivision Code which clarify various procedures and requirements. Many of these needed changes were brought to light following a recently appealed plat. During that process, a number of confusing and missing elements were discovered. These proposed changes address those issues. The changes also include a thorough description of various meeting types and procedures. This is a requirement of the Local Land Use Planning Act but has been missing from our codes. The Planning and Zoning Commission considered these changes at its December 3, 2019, and recommended approval by unanimous vote. Staff concurs with this recommendation and respectfully requests approval of the changes.

Relevant PBB Results & Department Strategic Plan

☐ ☒ ☒ ☐ ☐ ☐ ☐ ☐

The ordinance amendments are consistent with goals for good governance and growth. They clarify procedural requirements and include missing components mandated by State Code. These make the development process more clear and understandable.

Interdepartmental Coordination

Staff from Planning and Legal have coordinated on these changes.

Fiscal Impact

NA

Legal Review

Legal has reviewed all of the proposed changes.

IDAHO FALLS PLANNING AND ZONING COMMISSION
STAFF REPORT

Subdivision and Comprehensive Zoning Ordinance Amendments
Preliminary and Final Plat Processes, Decision Making Procedures
November 12, 2019

IDAHO FALLS

Community Development Services

Applicant: City of Idaho Falls

Attachments:
1. Proposed Amendment Language

Staff Recommendation: To **recommend** to the Mayor and City Council approval of the amendment of Title 10, Chapter 1 Subdivision Ordinance of the City Code, Sections 10-1-8 Preliminary Plat Approval Process; 10-1-9 Final Plat Approval Process; 10-1-13 Administration and Title 11, Chapter 6 Administration of the Comprehensive Zoning Ordinance, Section 11-6-4 Decision-Making Procedures.

Staff Comments:

Subdivision Ordinance: Proposed amendment language includes changes to both the preliminary and final plat approval processes. Generally the changes are minor in nature and reflect an effort to clarify the language of the Subdivision Ordinance with application materials and the requirements of State Statute.

Minor adjustments to the preliminary plat review process include reordering some paragraphs, including the "Application and Contents of Preliminary Plats. Additional minor changes include clarifying that the Commission can require additional information, in the form of data, studies, or comments necessary to determine such compliance. This has always been the case, but staff felt it appropriate to specifically state the Commission's ability.

A significant change to the review process is a requirement for a neighborhood meeting prior to the public hearing in front of the Planning and Zoning Commission. A requirement like this has been discussed off and on for some time both at the staff and Commission level. Previously it had been discussed, but it was determined not to formalize the process. After our most recent preliminary plat hearings the topic was again brought up. The proposed language would require a developer to hold a neighborhood meeting not less than 10 days prior to the public hearing. The purpose of the neighborhood meeting requirement is to allow the developer to present the preliminary plat proposal to members of the public prior to the public hearing so that they can discuss and consider neighborhood impacts, mitigation, layout, construction elements, etc.

Other changes to the preliminary plat process include clarifying the appeal process language and extending the plat expiration timeframe from 18 months to 24 months. Recently there was a lot of confusion regarding the appeal process. The proposed language will clarify the appeal timeframes as well as the requirements of the appeal. The appeal is on the record that was created during the Public Hearing process and the appellant will be required to list the specific code provisions or other reasons that comprise the error. These changes are intended to make that process run smoother from all sides.

The Final Plat process is modified slightly to be more consistent with State Statute. The City will be required to publish notice of the Council's final decision regarding a final plat in the newspaper. This allows a potential aggrieved person to seek judicial review following a final decision.

Comprehensive Zoning Ordinance: The proposed amendment language also includes a modification to the Decision-Making Procedures found in the Comprehensive Zoning Ordinance. These amendments repeal and replace what was previously in the Code. The purpose of this Section is to describe the manner in which decisions are rendered, the responsibilities in making decisions. It is further intended to provide consistency in the conduct of public hearings and meetings related to land use and to protect the public interest and private rights of all participants.

The ordinance currently includes similar language, but the proposed amendment will expand that language and provide more specificity to be consistent with Idaho Code. The ordinance language provides specific guidance for different hearing types, including Quasi-Judicial and Legislative. It specifies the type of land use application according to each hearing type and process. The amendment language also, more fully, clarifies the appeals process for interpretation and administration issues within the Zoning Ordinance and provides for a mediation process.

November 12, 2019 7:00 p.m. Planning Department

Council Chambers

MEMBERS PRESENT: Commissioners Margaret Wimborne, Joanne Denney, Brent Dixon, Arnold Cantu, Gene Hicks, Natalie Black, George Morrison. (7 present 6 votes).

MEMBERS ABSENT: George Swaney, Lindsey Romankiw

ALSO PRESENT: Planning Director Brad Cramer; Assistant Planning Directors Kerry Beutler, Brent McLane and Brian Stephens; and interested citizens.

CALL TO ORDER: Margaret Wimborne called the meeting to order at 7:00 p.m.

CHANGES TO AGENDA: None.

MINUTES: Morrison and Dixon had changes to the minutes regarding wording of their comments. (Pages 7, 8, 16 and 17). **Cantu moved to approve the October 2, 2019 minutes with the suggested amendments, Black seconded the motion and it passed unanimously.**

Public Hearing(s):

11. RZON 19-010: SUBDIVISION ORDINANCE AMENDMENT. Beutler presented the staff report, a part of the record. Wimborne asked if neighborhood meetings are becoming more common. Beutler stated that Staff always recommends anyone who comes in for an application, not just a preliminary plat, and it is a mixed bag of who does or doesn't do the meeting. Cramer stated that part of the reason this is finally being put in the Ordinance is because it was recommended a few times and each time the Commission just wanted to "strongly recommend", but staff was witnessing that the Commission was treating applicants that did have a neighborhood meeting better than the applicants that didn't have a meeting. Cramer stated that if you are going to treat it differently and judge your vote on whether they did, then just require the meeting, or don't even ask. Black asked if they are required to mail notices out for the neighborhood meeting and will requiring the meeting be an added expense. Beutler stated that it will vary with the project. Beutler stated that preliminary plats are usually larger developments including multiple phases, so it could have a larger pool to be notified for the neighborhood meeting. Dixon asked about the page numbering 15-16, 15-18 that show there are changes, but he can't find the change. Beutler indicated those changes are formatting adjustments and the last sections are the repeal and replace section for the zoning ordinance. Dixon is concerned that the neighborhood meetings will result in last minute changes and he would like something worked into the Ordinance about how soon the revisions need to be submitted prior to the planning hearing. Beutler stated that developers who value the neighborhood meeting and the response are going to have the neighborhood meeting early enough that they can respond and get the application in. Beutler stated that the language is specific that it can't be less than 10 days prior, but it could be sooner. Beutler stated that they require the applications to come into their office 5 weeks prior to the planning and zoning meeting so they have time for review. Beutler stated that if there is a significant change after the neighborhood meeting, then Staff's response would be to postpone the application as they haven't had sufficient time to review the revisions. Dixon asked if there is something that is small enough that would not require a neighborhood meeting, such as a one lot plat and the lot is less than 1/5 acre, and the zone is the same as surrounding zones. Beutler stated that this is the preliminary plat portion and most likely in a situation like that they

would go straight to a final plat, so the neighborhood meeting wouldn't be required. Dixon expressed concern that they would avoid the preliminary plat and go straight to final. Beutler explained the reasons that they would necessitate a preliminary plat. Dixon asked where the changes are regarding "sense of community" and "fitting in with existing development". Beutler indicated that those types of items would go in the Comprehensive Plan. Beutler stated that the Subdivision Ordinance is City Code and needs to be more direct, rigid code language. Dixon believes the Downtown Code is blurring the lines between what is strict code and what is "feel right or look attractive". Beutler stated that the Form Based Code has both the idealistic statements as well as a very rigid code, so it results in a stricter code than the traditional zoning. Beutler again clarified that the subdivision ordinance (how land is divided) is different than the zoning ordinance (land use). Beutler continued with the staff report.

Wimborne opened the public hearing.

No one appeared in support or opposition of the application.

Wimborne closed the public hearing.

Black still has a problem with requiring a neighborhood meeting.

Wimborne echoed Commissioner's Black concern. Wimborne is concerned about the requirement and if there are too many roadblocks in the way what does it look like.

Morrison doesn't want to complicate it. Morrison is unsure where to draw the line but is unsure they should require the meetings.

Dixon has some questions regarding quasi-judicial hearing taking two meetings. Wimborne clarified that it is Commission and then City Council. Dixon asked proposed saying that speakers shall be limited to 5 min. unless the Chair allows for longer time limits. Wimborne stated that the primary purpose for this piece is to align with State Code and the language still gives discretion. Dixon noticed that the public comments are less and less organized and more and more repetitive. Wimborne believes it is more of the nature of things that have been recently brought up like the forced annexation that are more emotional. Dixon would like to recommend that for that portion of this Ordinance that they recess it until they have a chance to read through what is in there. Dixon didn't realize that the multiple pages are brand new and it will affect directly how the meetings have to be ran. Wimborne asked if the other Commissioners are comfortable recessing. Wimborne believes there are enough Commissioners that are comfortable to move forward that if there is a motion then we can see where to go.

Black moved to recommend to the Mayor and City Council approval of the Amendment to Title 10 Chapter 1 Subdivision Ordinance of the City Code, Sections 10-1-8 Preliminary Plat Approval Process with the exclusion of 10-1-8(b)(6) the requirement for the neighborhood meeting; 10-1-9 Final Plat Approval Process; 10-1-13 Administration and Title 11, Chapter 6 Administration of the Comprehensive Zoning Ordinance, Section 11-6-4 Decision-Making Procedures, Denney seconded the motion.

Dixon proposed an amendment to the Motion. Dixon moved to exclude Title 11 Chapter 6 Section 11-6-4 for Decision-Making Procedures because the notes that the Commission was given there was a different number given, didn't indicate that it was a change, and that is

10 pages of material that some of the Commissioners have not reviewed. Morrison seconded the motion.

Wimborne called for a vote on the amendment to the motion (exclude 11-6-4). The motion tied 3-3. Morrison abstained. Dixon questioned whether Wimborne could vote unless it's a tie. Wimborne indicated that she can vote whenever she wants. Dixon stated that in the past it was used as a tiebreaker.

Morrison voted for the amendment. Amendment passed 4-3.

Wimborne called for a vote on the original motion with the amendment that just passed. The motion passed 6-1. Hicks opposed the motion.

Hicks indicated that in his 2 years on the Commission he believes more times than not a neighborhood meeting would have solved a lot of problems early on.

Wimborne suggested to staff to bring back section 11-6-4 to the December meeting and then maybe some more discussion on the neighborhood meeting requirement.

Cramer asked if the motion was to say that they recommend that it not be approved, or they want more discussion about the neighborhood meeting. Wimborne indicated that her vote was not approve the neighborhood meeting at this time, so that would open the door for more discussion. Cramer stated that when the brought the Ordinance to Council they will specify that they voted not to recommend approval of that piece. Wimborne clarified with the other commissioners that was their intention. Denney indicated that she would like more discussion. Denney would like a recess. Black's vote was to not recommend to Mayor and City Council. Morrison and Dixon both want to recess the matter. Wimborne stated that the motion was to not approve the amendment. Wimborne believes the cleanest going forward is to go to City Council and state that the Commission does not approve, and the staff comments state that they are going to take another look at it. Cramer stated that they will chat internally about whether they want to take everything to City Council until they have a chance to re-review everything. Cramer stated that City Council is very interested in having the discussion about the neighborhood meeting. Cramer asked if they want to have a more thorough discussion or take it to City Council with the information that they've been given. Dixon stated that he proposed the amendment, and the reason he gave was because they hadn't had time to study it, which sounds like even though the motion didn't state it, the motion was prefaced by "we need time to study this." Dixon stated that the original motion that specifically excluded the one paragraph was different. Wimborne indicated that the motion was specific to not take it forward to City Council, but after polling the Commissioners it appears there is some interest with some Commissioners to look at it again. Wimborne stated that another discussion during a meeting will not help. Wimborne stated that if they are the only community in this side of the State that requires it, she is not comfortable with that. Wimborne asked Denney what information she would like if they recessed the matter. Denney would like to see how often the Commission acted "in favor" of an applicant that did have a neighborhood meeting. Denney stated that she knows they ask frequently and then add that its sad that they didn't do a meeting. Black asked if City Council wants to look at Planning Commissions discussion more, or do they want to have the discussion. Cramer indicated that City Council wants to have their discussion, but this Commissions discussion would be helpful. Cramer stated there is no rush. Cramer stated that they could have a workshop on Friday if they posted it tonight or wait till December as December agenda is light. Dixon added that he is not

sure that they should require a meeting of everything because some things don’t make sense to have a neighborhood meeting.

December 3, 2019 7:00 p.m. Planning Department

Council Chambers

MEMBERS PRESENT: Commissioners Natalie Black, Joanne Denney, Brent Dixon, Gene Hicks, George Morrison. (5 present 4 votes).

MEMBERS ABSENT: George Swaney, Lindsey Romankiw, Arnold Cantu , Margaret Wimborne

ALSO PRESENT: Planning Director Brad Cramer; Assistant Planning Directors Kerry Beutler, Brent McLane and Brian Stephens; and interested citizens.

CALL TO ORDER: Natalie Black called the meeting to order at 7:00 p.m.

CHANGES TO AGENDA: None.

MINUTES: Hicks moved to approve the November 12, 2019 minutes, Morrison seconded the motion and it passed unanimously.

Business:

5. ANNX 19-013: ANNEXATION/INITIAL ZONING. Annexation and Initial Zoning of I&M. Stephens presented the staff report, a part of the record.

Applicant: Bryce Esplin, 3834 Professional Way, Idaho Falls, Idaho. Esplin stood for questions.

Morrison moved to recommend to the Mayor and City Council approval of the annexation and initial zoning of I&M for Lot 4, Block 1, Sunnyside Industrial and Professional Park, as presented, Hicks seconded the motion and it passed unanimously.

Public Hearing(s):

RZON 19-010: REZONE. Amend Subdivision Ordinance and Zoning Ordinance. Beutler presented the staff report, a part of the record. Beutler reported his findings as requested from Commission members regarding neighborhood meetings in other jurisdictions, and the result of hearings when a meeting was had versus no neighborhood meeting. Dixon suggested if they had the option of requiring a neighborhood meeting between appearing at Planning and Zoning and City Council, however if Planning and Zoning approves Preliminary Plats that is not feasible. Beutler stated that they could postpone the decision on the plat to allow a developer to address specific issues and that might include addressing them with the neighborhood. Beutler indicated that the neighborhood meetings with the annexations have been perfected over time and have made the meetings less contentious and they are helpful when they happen with a PUD. Cramer stated that since he was defeated again on the neighborhood meeting. Staff will put together a guidebook on how to do a good neighborhood meeting and give it to developers with a *strong* recommendation for them to do a neighborhood meeting for their project and see how that goes for 6-12 months. Beutler asked if there are any other questions about how to conduct quasi-judicial hearings and the attorney has worked through that and outlines it in specific terms.

Dixon asked about spiral bound booklets and Dixon suggested having the specific order for meetings and what type of motions can be made in their booklet.

Black opened and closed the public hearing.

Dixon was concerned about the neighborhood meetings on 10-1-8 that it was still included. Beutler clarified that the motion from last month excluded the neighborhood meeting, so there is no recommendation on that portion and the motion is for the rest beginning with Title 11.

Morrison moved to recommend to the Mayor and City Council approval of the Amendment to Title 11, Chapter 6 Administration of the Comprehensive Zoning Ordinance Section 11-6-4 Decision-Making Criteria, Hicks seconded the motion and it passed unanimously.

ORDINANCE NO. _____

AN ORDINANCE OF THE CITY OF IDAHO FALLS, IDAHO, AMENDING CITY SUBDIVISION CODE TO CLARIFY PLATTING PROCEDURES; AMENDING THE ZONING CODE BY ESTABLISHING HEARING AND MEDIATION PROCEDURES FOR CERTAIN LAND-USE MATTERS; AND PROVIDING SEVERABILITY, CODIFICATION, PUBLICATION BY SUMMARY, AND ESTABLISHING EFFECTIVE DATE.

WHEREAS, clarity and predictability in the public process is an important and valued goal of the Council; and

WHEREAS, City processes for Community Development and Planning should be logical, helpful, and productive and should gather staff, public, and development information to lead to a well-reasoned determination; and

WHEREAS, outlining public hearing procedures in the Zoning Code will inform participants of the relative expectations in advance of the public process and will help the hearing proceed in an orderly, respectful, and inclusive manner; and

WHEREAS, adding a mediation process and clarifying appeal rights is consistent with Local Land Use Planning Act (LLUPA) elements; and

WHEREAS, this Ordinance promotes good planning and reasonable public input and due process.

NOW, THEREFORE, BE IT ORDAINED BY THE MAYOR AND COUNCIL OF THE CITY OF IDAHO FALLS, IDAHO, THAT:

SECTION 1. Title 10, Chapter 1 of the City Code of the City of Idaho Falls, Idaho, is hereby amended as follows:

. . .

10-1-8 PRELIMINARY PLAT APPROVAL PROCESS:

(A) Preliminary plat approval to subdivide land shall be required when a proposed subdivision includes multiple phases of development, when the subdivision will be divided into several lots and blocks, when the application involves adjustments or realignments to the layout of existing public streets, when the plat proposes the dedication of new public rights-of-way or public facilities, and when directed by the Director. Approval of a preliminary does not constitute approval of the final

plat. Actual subdivision does not occur until the final plat is approved and recorded with the Bonneville County Recorder.

(B) Submittal and City Staff Review Process:

(1) Pre-application Meeting. Prior to submitting an application for a Preliminary Plat, the developer shall request a pre-application meeting with City staff. The Community Development Services Department shall schedule and conduct a pre-application meeting within three (3) business days following receipt of a request from a developer. The developer shall provide either a sketch plat or a copy of the proposed preliminary plat prior to the pre-application meeting.

~~(1)~~(2) Application and Contents of Preliminary Plats. The application and plat shall accurately and fairly describe and depict all improvements, structures, boundary lines, lot configurations, area to be developed, existing and proposed land use and zoning, grades, land contour, recreational and public use area, utilities, water works, topography, streets, alleys, easements, and shall contain such other information as may be necessary to determine if the proposed subdivision complies with the requirements of this Chapter. The plat shall be drawn in accordance with generally accepted engineering standards and practices and shall be drawn in such a manner as will assure legibility, clarity, reproducibility, accuracy, uniformity, and neatness of the plat.

~~(2)~~ (3) A complete application shall be submitted to the Community Development Services Department on a form provided by the City and accompanied by a filing fee as set by Resolution of the Council. The application shall be submitted at least five (5) weeks prior to the regularly scheduled Planning and Zoning Commission meeting, or as otherwise approved by the Director.

~~(3)~~ (4) Following receipt of a complete application and all applicable fees, the Community Development Services Department shall distribute copies of the Preliminary Plat and other application materials to appropriate reviewing agencies for review and comment.

~~(4)~~ (5) The City will return redlined documents to the applicant or ~~his~~ the applicant's agent detailing any changes requested by the reviewing agencies.

(6~~5~~) Preliminary Plat Public Hearing.

a. ~~When reviewed~~After the review of City staff comments and recommendations have been addressed and resubmitted to the Community Development Services Department~~, by the~~ a public hearing at a regularly

scheduled meeting with the Planning and Zoning Commission shall be scheduled to consider the preliminary plat. Notice of the preliminary plat hearing shall be pursuant to requirements of the Idaho Local Land Use Planning Act. Within sixty (60) days following the date of the Commission meeting at which the plat and application were first submitted, the Commission shall complete its review and shall approve, conditionally approve, or disapprove of the preliminary plat and application, unless an extension of time is agreed to by the Commission and the developer.

(C) Planning and Zoning Commission Review.

~~C.~~ (~~6~~1) When acting on a~~n~~ preliminary plat application, the Planning and Zoning Commission shall review the preliminary plat to determine that the preliminary plat is consistent with the principles contained within the Comprehensive Plan and is in compliance with this Chapter~~, the Comprehensive Plan,~~ and all applicable Federal, State, or local laws. In conducting such reviews, the Commission may recess such ~~meeting~~ hearing for good cause and may solicit information, data, studies, or comments necessary to determine such compliance. ~~from other departments and divisions of the City.~~ In the event the Commission conditionally approves the preliminary plat, it shall advise the developer in writing of the conditions under which the approval is granted, and upon developer's compliance with such conditions and the Director's written certification thereof, the preliminary plat shall be deemed approved. If approval of the plat is denied, the Commission shall advise the developer, in writing, of the reasons for denial of the preliminary plat application.

(2) Model Homes. The Council shall allow no more than two (2) model homes to be built in a subdivision after preliminary plat approval, but before final plat approval, provided the lots to be developed have frontage upon an existing public street.

(D~~6~~) Appeal of Preliminary Plat. Any ~~aggrieved~~ person aggrieved by ~~whose preliminary plat has been denied by~~ the Planning and Zoning Commission decision on the preliminary plat may ~~petition the Council for a hearing to~~ appeal the Planning and Zoning Commission's decision. Such ~~petition~~ appeal shall be submitted with the appeal fee to the Community Development Services Department within fourteen (14) days from the Planning and Zoning Commission's written decision and shall list the specific Code provisions or other reasons that the appellant believes comprise error. The appeal is on the record that was produced in the preliminary plat process. The appeal shall be scheduled for consideration at a Council meeting and shall occur within sixty (60) days following receipt of the appeal. Upon considering the preliminary plat appeal, the Council may uphold the appeal, deny the appeal, or remand the appeal to the Planning and Zoning Commission for further action, including direction to reopen the public hearing to receive further information.

~~(C) Application and Contents of Plats: The application and plat shall accurately and fairly describe and depict all improvements, structures, boundary lines, lot configurations, area to be developed, existing and proposed land use and zoning, grades, land contour, recreational and public use area, utilities, water works, topography, streets, alleys, easements, and shall contain such other information as may be necessary to determine if the proposed subdivision complies with the requirements of this Chapter. The plat shall be drawn in accordance with generally accepted engineering standards and practices and shall be drawn in such a manner as will assure legibility, clarity, reproducibility, accuracy, uniformity, and neatness of the plat.~~

~~(D)~~ (E) Preliminary Plat Expiration: The approval of a preliminary plat shall expire twenty-four (24) ~~eighteen (18)~~ months following the date of approval unless a final plat has been approved by the Commission. If the plat is being phased, the preliminary plat shall expire ~~eighteen~~ twenty-four (24~~18~~) months following the date of approval of the final plat for the previous phase. The Planning and Zoning Commission may grant one (1) written ~~eighteen~~ twenty-four (24~~18~~) month extension upon finding good cause.

~~(E) Model Homes: The Council shall allow no more than two (2) model homes to be built in a subdivision after preliminary plat approval, but before final plat approval, provided the lots to be developed have frontage upon an existing public street.~~

10-1-9 FINAL PLAT APPROVAL PROCESS:

(A) Submittal and Review Process:

(1) Following the approval of the sketch plat or preliminary plat, as the case may be, the developer may file an application for final approval of the subdivision plat. Subdivisions that include public improvements shall submit improvement drawings as required by this Chapter. Submittal of improvement drawings shall run concurrently with the submittal of the final plat. All applications shall be made on a form provided by the City and shall be accompanied by a filing fee as set by Resolution of the Council.

(2) A complete application shall be submitted to the Community and Development Services Department. Application shall be submitted at least five (5) weeks prior to the scheduled Planning and Zoning Commission meeting where the application will be considered.

(3) In addition to the application forms required by the Community Development Services Department, the application shall show that the Final Plat is consistent with the approved Preliminary Plat.

(4) If the number of residential buildable lots has increased more than five percent (5%) within any proposed division or if roadway patterns have

been modified within the preliminary plat, the Final Plat shall be determined not to be consistent with the Preliminary Plat. If the Director determines that the Final Plat is not consistent with the Preliminary Plat or that conditions of the Preliminary Plat approval have not been met, a new Preliminary Plat shall be submitted and processed according to the requirements of this Chapter.

(5) All development shall comply with the Plat Phasing Sequence shown and approved on the Preliminary Plat. Any variation of sequence shall be re-approved following a full staff review and subsequent re-approval by the Director.

(6) When review comments and recommendations have been satisfactorily addressed by the applicant and resubmitted to the Community Development Services Department, the Planning and Zoning Commission shall consider the Final Plat at a regular scheduled meeting of the Commission. Within sixty (60) days after the meeting of the Commission at which the request for approval of the Final Plat is considered, the Commission shall recommend to the Council approval or denial of the Final Plat. However, the developer may request that the matter be recessed, and in such event, the sixty (60) day period for initial decision making shall not commence until the matter is again considered by the Commission. The Commission shall provide the applicant with written certification of its decision as required by Idaho Code. Whenever the Commission recommends denial of the final plat, it shall specify the ordinances and standards used in evaluating the application, and its reasons for denial thereof and the actions, if any, that the applicant may take to obtain their approval. If the Planning and Zoning Commission denies the Final Plat, or if substantial changes are required, the plat shall be resubmitted.

(7) Consideration of the request for final plat approval may be conducted simultaneously with hearings for annexation, initial zoning, rezoning, or amendment of the Comprehensive Plan relating to the same property.

(8) Upon the developer's written request, the Commission shall forward its recommendation to the Council, provided, however, if such request is not physically filed with the Director within one (1) year following the date the Commission issues its recommendation, then the application shall become void. Within forty-five (45) days after the developer's written request, the Council shall hear the request for approval of the final plat to determine if the same complies with the provisions of this Chapter.

(9) If the final plat conforms to the provisions of this Chapter and all other applicable State or Federal laws, or local ordinances, the Council shall approve the final plat and authorize the Mayor and Clerk to sign the original plat. In granting or denying the application for approval of the final

plat, the Council shall specify the ordinance and standards used in evaluating the application, and reasons for approval or denial, and the actions, if any, that the applicant may take to obtain approval. The Council shall provide the applicant with written approval of the final plat, ~~certification of its~~ decision as required by Idaho Code. The City shall publish notice of the Council's final decision in the City's official newspaper within ten (10) days.

(10) Proof of payment of all engineering, hook-up, water and sewer, road and bridge, and surface drainage fees and all other fees prescribed by ~~c~~City ordinance.

. . .

10-1-13 ADMINISTRATION – VARIANCES - APPEALS:

(A) Director: The Director shall administer the terms and provision of this Chapter and received and process all subdivision applications.

(B) Variances: The Council may, upon recommendation from the Commission, grant a variance to the terms and provision of this Chapter. A variance may be granted only upon an express finding that all of the following conditions exist:

(1) There are special circumstances or conditions affecting the property being platted such that a strict application of this Chapter would clearly be impracticable or unreasonable.

(2) Strict compliance with this Chapter would result in extraordinary hardship, as distinguished from mere inconvenience, to the developer because of the particular physical surroundings, shape, or unusual topography of the developer's property, and will substantially preclude development of the property.

(3) The circumstances for which the variance is sought are unique to the property and are not applicable to other properties similarly situated.

(4) The variance is the least deviation from this Chapter necessary to mitigate the hardship.

(5) The granting of the variance is not likely to be substantially detrimental to the public safety, health, and welfare or will not substantially injure other property adjoining the property for which the variance is sought.

(6) The variance is not otherwise contrary to law.

(7) The conditions necessitating the variance were not caused or exacerbated by or in any way arise from the actions of the developer.

(C) Appeals of Final Decisions: Any ~~applicant~~ person denied a permit or aggrieved by a final decision of the City, may, within sixty (60) days after all remedies have been exhausted under this ~~Chapter~~Code, seek judicial review pursuant to the judicial review procedures set forth in Title 67, Chapter 65 Idaho Code.

SECTION 2. Title 11, Chapter 6 of the City Code of the City of Idaho Falls, Idaho, shall be amended as follows:

11-6-4: DECISION–MAKING PROCEDURES. The purpose of this Section is to describe the manner in which decisions are rendered, the responsibilities in making decisions and the process for appeal of decisions.

(A) General Provisions.

(1) All decisions and any conditions for the approval of any permit shall be set forth in writing.

(2) Any city decision-making body may impose conditions upon the approval of any permit, provided such conditions are reasonably necessary to implement or achieve the requirements of this Code.

(B) Decisions of the Board Adjustment and Planning Commission.

(1) A majority vote of the members present shall be necessary to decide upon any matter upon which a vote is required to pass.

(2) For applications that do not require the approval of the City Council, the Planning and Zoning Commission shall approve or deny the application on a majority vote.

(3) If the application requires approval by the City Council, the Planning and Zoning Commission or Board of Adjustment shall forward its recommendations to the Council. The Council shall, within a reasonable time, hold at least one (1) public hearing to consider the application.

(4) Written notice of decisions of the Board of Adjustment and Planning and Zoning Commission, including conditions and Reasoned Statement of Relevant Criteria and Standards, shall be sent within five (5) days to the applicant and/or their representative, and all persons who have requested a copy of the decision.

(C~~D~~) Appeal Procedures for Board of Adjustment and Planning and Zoning Commission Decisions.

(1) Decisions of the Board of Adjustment and Planning and Zoning Commission shall be final unless a written appeal is made to the City Council within fourteen (14) days of the date of the written notice of decision described above in paragraph Section 11-6-4B (4).

(a) The written notice of appeal shall be fi led with the Zoning Administrator and shall set forth the objections to the decision made by the Board of Adjustment or Planning and Zoning Commission.

(b) Upon receipt of the appeal, the Zoning Administrator shall forward to the Council the record of the Board of Adjustment or Planning and Zoning Commission, including the Reasoned Statement of Relevant Criteria and Standards, adopted by the Board or the Commission.

(2) The concurring vote of a majority of the members of the City Council shall be required to reverse any requirement, decision, or condition of the Board of Adjustment or Planning and Zoning Commission.

(3) Any person aggrieved by a decision of the Council may seek recourse as provided in Idaho Code, as amended.

(D) Hearing Purpose. To provide consistency in the conduct of public hearings and meetings held in conjunction with the process of regulating the use and development of land within the jurisdiction of the City; to protect the public interest and the private rights of all participants in the public hearing process; and to comply with the requirements of Idaho Code Title 67 Chapter 65. The term "decision-making board" shall mean the Board of Adjustment, Planning and Zoning Commission, Council, hearing examiner or advisory board and any other person or persons duly authorized to make a determination regarding zoning or land use planning pursuant to Idaho Code or this Code, excluding City staff.

~~(A)~~ (E) Types of Hearings.

(1) Single Meeting Quasi-Judicial Hearings.

(a) General.

Single Meeting Quasi-Judicial Hearings shall be required when a permit or discretionary administrative ruling is sought from a decision-making board such as the Board of Adjustment, Planning and Zoning Commission, or Council and only one (1) public hearing is required by this Code or the Idaho Code before final action can be taken on the request. Because such a hearing may influence the individual rights of applicants, this administrative procedure shall be more strictly controlled to protect individual rights. Decisions

following Single Meeting Quasi-Judicial Hearings shall be final, subject to appeal to a higher decision-making authority as provided by this Code or the Idaho Code. Permits to which this procedure shall apply are the variance, Conditional Use Permit, Preliminary Plat, or vacation of a portion of a subdivision plat.

(b) Procedures for Single Meeting Quasi-Judicial Hearings.

1. Pre-Hearing.

Prior to the conduct of the hearing, no person shall attempt to discuss the subject of the hearing with a member of the decision-making board destined to decide the issue. Any such attempt shall be reported by the decision-making board member so approached to legal counsel for the decision-making board who shall advise the decision-making board in that regard. Notices of public hearing shall provide adequate information to allow notice recipients to participate in the hearing process.

2. The Hearing.

(a) Public hearings shall be conducted according to orderly procedures as specified by the chair of the meeting, subject to the will of the decision-making board.

(b) All procedures shall be directed to providing the participants in the hearing a fair chance to be heard by an impartial decision-making board.

(c) Decision-making board members having a conflict of interest involving the subject matter of a hearing shall participate only as allowed by Idaho Code.

(d) The chair of the decision-making board shall have sole authority to recognize participants in the hearing process and to maintain order in its conduct. All inquiries regarding the presentation of any person shall be directed to the chair, who shall decide the need for a response and seek one where necessary or appropriate.

(e) Subject to decision-making board objection, the chair may establish reasonable time limits on presentations in the interest of fairness and to provide more people with a chance to participate. Said limitations may be established at the beginning of the hearing or may be invoked during the hearing when conditions warrant.

(f) Clapping, jeering, interrupting, commenting, out of turn and personal attacks, and being disruptive and discourteous are not allowed and may cause the perpetrator(s) to be removed from the hearing at the order of the chair or decision-making board.

(g) Formal rules of evidence will not apply during the hearing, but the chair may rule that certain testimony may be excluded or shortened because of its relevance to the subject of the hearing.

(h) Hearings conducted in accord with this Section shall generally be conducted in the following order:

i. Opening of hearing and call to order.

ii. Introduction of hearing item explanation of request and receipt of City staff evidence and materials or applicant's representative(s).

iii. Presentation by applicant.

iv. Testimony in support, opposition, and other public testimony.

v. Response of applicant testimony or board questions.

vi. Other response as determined by the Chair.

vii. Closure of the public hearing.

viii. Decision-making board deliberations without further unsolicited comment.

(i) Members of the decision-making board may question any participant in the hearing process concerning any representations made or questions raised in the course of the hearing or in written materials submitted prior to the hearing.

(j) The chair of the decision-making board conducting the hearing may solicit a response to a question seeking a specific objective fact from any participant without reopening the hearing for general testimony.

3. Post-Hearing

(a) At the close of the initial public hearing the decision-making board may take any of the following actions concerning the application before it:

i. Approve the application as presented.

ii. Reject the application as presented.

iii. Approve the application subject to specific conditions as permitted by the applicable substantive City Code or Idaho Code.

iv. Table the application to allow fact finding by the City staff, to receive answers to specific factual questions from the applicant or the interested public, or to defer the decision for further reflection. When a request is tabled, the final decision shall be made at a succeeding regularly scheduled meeting, or at a special meeting for which proper notice has been given. Tabling should seldom occur, due to the practical and logistical problems created thereby.

v. Schedule a continuation of the public hearing at a specific time and place. This provision shall apply to any visit to the site in question by the decision-making board.

aa. Following each public hearing, the decision-making board shall reach a decision regarding the permission sought in the subject application. The deliberations and final decision shall be conducted in an open meeting, subject to the public scrutiny, and shall be made in a timely manner.

bb. Decisions in such applications shall be accompanied by a written Reasoned Statement of Relevant Criteria and Standards which shall set forth the reasons for the decision-making board's decision pursuant to Idaho Code. Reasoned Statement of Relevant Criteria and Standards shall be adopted by specific motion of the decision-making board.

cc. Adoption of Reasoned Statement of Relevant Criteria and Standards shall constitute a final decision for purposes of appeal.

(2) Two Meeting Quasi-Judicial Hearings.

a. General.

Two Meeting Quasi-Judicial Hearings shall be required when the permit or regulatory change sought requires a sequence of two (2) or more public hearings before final action may be taken on the request. The initial public hearing shall be conducted by the Planning and Zoning Commission whose task is to prepare a recommendation for submittal to the Council. Following receipt of the recommendation from the advisory board, a second public hearing must be scheduled before the Council before a decision on the request may be rendered. Like those hearings classified as Single Meeting Quasi-Judicial Hearings the rights of individuals are at stake and the protection of those rights is a prime purpose of the required procedure. Like a Single Meeting Quasi-Judicial Hearings procedure the resulting decision from a Two Meeting Quasi-Judicial Hearings procedure is final unless appealed to a subsequent decision-making tribunal. Unlike the Single Meeting Quasi-Judicial Hearings procedure, care must be taken in the steps between the initial and second hearing to protect the interests of all parties involved. Two Meeting Quasi-Judicial Hearings are used in request for changes in zoning district boundaries, changes to the Comprehensive Plan when sought in conjunction with a request for a change in zoning district boundaries, Planned Unit Developments.

b. The Hearings.

1. The Two Meeting Quasi-Judicial Hearings are to be conducted according to the same format as the Single Meeting Quasi-Judicial Hearings in the preceding section. The Two Meeting Quasi-Judicial Hearings procedure differs only in that two (2) successive hearings on the same matter (not on appeal) are required to complete the process. Both hearings are de novo hearings, which allow presentation of any pertinent information regardless of prior participation and/or deliberation in the process.

2. The first hearing shall be conducted by the Planning and Zoning Commission and shall be held for the purpose of formulating a recommendation to be forwarded to the Council.

3. The second hearing shall be conducted by the Council according to the same guidelines and requirements which are applied to a Single Meeting Quasi-Judicial Hearings.

c. Post-Hearing.

At the conclusion of the public hearing held by the Council, the Council may take any of the following actions:

1. Approve the recommendation of the Planning and Zoning Commission, and adopt the Planning and Zoning Commission's Reasoned Statement of Relevant Criteria and Standards.

2. Approve the recommendation of the Planning and Zoning Commission, subject to modifications to the Planning and Zoning Commission's Reasoned Statement of Relevant Criteria and Standards.

3. Render a decision different from the recommendation of the Planning and Zoning Commission, and adopt a new Reasoned Statement of Relevant Criteria and Standards.

4. Defer decision on the request to a later meeting date.

5. Remand the recommendation to the Planning and Zoning Commission for clarification or further documentation of the recommendation prior to reaching a decision.

d. A decision shall be deemed final when a proposal has been either approved or disapproved by the Council.

(3) Legislative Hearings.

a. General.

Legislative hearings shall be required for Category B annexation and when amendments are contemplated to the substantive or procedural terms of the Zoning Code, the Subdivision Code, the Sign Code, or the Comprehensive Plan. Legislative hearings are characterized by their general applicability to the community as a whole. Legislative hearings may only be initiated by City staff, the Planning and Zoning Commission, or at the direction of the Mayor or the Council.

1. Legislative hearings are required when changes are proposed to the land use regulations of the City which are subject to the requirements of Title 67, Chapter 65 of the Idaho Code, such as changes to the Zoning Code, the Subdivision Code, the Sign Code, or the Comprehensive Plan.

2. Legislative hearings are required to be held twice, similar to the Two Meeting Quasi-Judicial Hearings, but legislative hearings are not subject to the same procedural restrictions as are Quasi-Judicial hearings.

3. Ex parte contacts are not forbidden in conjunction with the legislative hearing process.

b. Pre-Hearing.

1. A legislative hearing may be scheduled by City staff, by order of the chair of the Planning and Zoning Commission, the Mayor, the Council, or by a motion passed by a majority of the membership of the respective board involved.

2. Upon said order the City staff shall cause to be published a public notice containing the nature of the proposed change contemplated to the land use regulations of the City and the time and place of the hearing.

3. A copy of the proposed change shall be made available to the public for inspection from the time notice is published to the time of the hearing.

4. Written comments may be forwarded for consideration any time prior to a vote of the board hearing the matter, as determined by its chair.

c. The Hearing.

General:

1. Testimony may be submitted in any form by any person interested in the legislative proposition, subject to rulings by the chair concerning form, length, or relevance. The chair shall be free to vary the order of hearing procedures as necessary or desirable.

2. Hearings conducted in accordance with this Section shall generally be conducted in the following order:

(a) Opening of the hearing and call to order.

(b) Introduction of hearing item and explanation of proposal and receipt of comment and materials presented before the public hearing.

(c) Public testimony in support, in opposition, or other testimony related to the proposal.

(d) Closure of the public hearing.

(e) Board deliberations without further unsolicited commitment.

3. All deliberations on matters which are the subject of legislative hearings shall be conducted in a properly called open meeting of the board considering the proposal.

d. The First Hearing.

1. At the close of the initial hearing, the Planning and Zoning Commission shall prepare a recommendation to the Council concerning the proposal before them. This recommendation may take any of the following forms:

(a) Approval of the proposal as presented.

(b) Rejection of the proposal as presented.

(c) Approval of the proposal subject to modifications as included in the Planning and Zoning Commission's recommendation.

2. The Planning and Zoning Commission shall forward its recommendation to the Council within forty-five (45) days of the close of the initial public hearing. The recommendation shall be in writing and shall set forth the reasons for the Planning and Zoning Commission's recommendation.

3. Upon receipt of the Planning and Zoning Commission's recommendation, the Council shall determine whether to hold a second public hearing on the subject of the initial legislative hearing. Upon an affirmative finding, the City shall publish notice of a Council legislative public hearing stating its nature and the time, place, and date.

e. The Second Hearing.

1. Procedures for the second hearing, conducted this time before the Council, shall be the same as for the initial hearing before the Planning and Zoning Commission.

2. At the conclusion of the second hearing the Council may take any of the following actions:

(a) Adopt the proposal in ordinance form as originally proposed or as recommended or modified by the Planning and Zoning Commission.

(b) Reject the change as proposed.

(c) Propose substantial modifications to the proposal originally made or to the proposal recommended by the Planning and Zoning Commission and return the substantially modified proposal to the Planning and Zoning Commission for a new initial hearing.

(F) Appeals of Interpretation or Administration.

(1) The Council shall review the appeal on the written record generated and/or preserved by the Board of Adjustment. Decisions made regarding appeals herein should be founded upon sound reason and practical application of recognized principles of law. When considering the merits of an appeal, no additional public testimony or information shall be taken or considered by the Council. After considering the record and the reasons for the appeal, the Council shall take one (1) or more of the following actions:

(a) Sustain the Decision. Sustain the decision of the Board in whole or in part.

(b) Reverse the Decision. Reverse the decision of the Board in whole or in part.

(c) Remand the Decision.

1. Remand the matter in whole or in part to the Board with comments and/or instructions for further consideration by the Board or for remand by the Board to the Zoning Administrator in order to gather more information on the matter. The Council shall remand the appeal in whole or in part for gathering of additional material information and a subsequent decision only where it is shown by a preponderance of the evidence that there is:

a. New material information not available or readily discoverable at the time of the Zoning Administrator's decision; and

b. It is in the public interest to develop such additional material information on the matter.

(2) Procedures and guidelines for an appeal in addition to that contained herein may be established from time to time by resolution of the Council.

(G) Mediation:

(1) Mediation Request. An applicant or any affected person may, by written request submitted to the Community Development Services Department, request mediation provided that the request is received no later than within seven (7) days of an appealable decision under this Chapter.

(2) Public Hearing. After receiving the written request, the Community Development Service Department shall present the mediation request to the Council. The Council shall evaluate the request at a public meeting and may order mediation if the Council believes the mediation may resolve the dispute.

(3) During mediation, any time limitation relevant to the application shall be tolled. Such tolling shall cease when the applicant or any other affected person, after having participated in at least one (1) mediation session, states in writing that no further participation is desired and notifies the other parties, or upon notice of a request to mediate wherein no mediation session is scheduled for twenty-eight (28) days from the date of such request.

(4) Pre-Mediation Conference. If the Council orders mediation, the Council shall select and pay the expense of the mediator for a first meeting with the mediator and the affected person(s). The first meeting with the mediator shall be to determine whether to schedule additional mediation meetings and to determine compensation to the mediator. The applicant and the affected parties shall be required to participate in the pre-mediation meeting; however, an applicant may decline to participate in mediation requested by an affected person and an affected person may decline to participate in mediation.

(5) Mediation may occur at any point during the decision-making process or after a final decision is made. If mediation occurs after a final decision, any resolution of differences through mediation shall be the subject of another public meeting before the decision-making body.

SECTION 3. Savings and Severability Clause. The provisions and parts of this Ordinance are intended to be severable. If any section, sentence, clause, or phrase of this Ordinance should be

held to be invalid or unconstitutional by a court of competent jurisdiction, such invalidity or unconstitutionality shall not affect the validity or constitutionality of any other section, sentence, clause, or phrase of this Ordinance.

SECTION 4. Codification Clause. The City Clerk is instructed to immediately forward this Ordinance to the codifier of the official municipal code for proper revision of the Code.

SECTION 5. Publication. This Ordinance, or a summary thereof in compliance with Idaho Code, shall be published once in the official newspaper of the City, and shall take effect immediately upon its passage, approval, and publication.

SECTION 6. Effective Date. This Ordinance shall be in full force and effect from and after its passage, approval, and publication.

PASSED by the City Council and APPROVED by the Mayor of the City of Idaho Falls, Idaho, this _____ day of _____, 2020.

CITY OF IDAHO FALLS, IDAHO

_____

REBECCA L. NOAH CASPER, MAYOR

ATTEST:

_____

KATHY HAMPTON, CITY CLERK

(SEAL)

STATE OF IDAHO)
) ss:
County of Bonneville)

I, KATHY HAMPTON, CITY CLERK OF THE CITY OF IDAHO FALLS, IDAHO, DO HEREBY CERTIFY:

That the above and foregoing is a full, true and correct copy of the Ordinance entitled, "AN ORDINANCE OF THE CITY OF IDAHO FALLS, IDAHO, AMENDING CITY SUBDIVISION CODE TO CLARIFY PLATTING PROCEDURES; AMENDING THE ZONING CODE BY ESTABLISHING HEARING AND MEDIATION PROCEDURES FOR CERTAIN LAND-USE MATTERS; AND PROVIDING SEVERABILITY, CODIFICATION, PUBLICATION BY SUMMARY, AND ESTABLISHING EFFECTIVE DATE."

(SEAL) _____
KATHY HAMPTON, CITY CLERK

IDAHO FALLS

MEMORANDUM

FROM: Brad Cramer, Community Development Services Director

DATE: Thursday, February 6, 2020

RE: Zoning Ordinance Amendments

Council Action Desired

☒ Ordinance ☐ Resolution ☒ Public Hearing

☐ Other Action (Approval, Authorization, Ratification, etc)

To approve the Ordinance amending City Code Title 11, Chapters 2, 3, and 4 under suspension of the rules that requires three complete and separate readings and that it be read by title and published by summary (or consider the Ordinance on the first reading and that it be read by title, or reject the Ordinance).

Description, Background Information & Purpose

For consideration are changes to three sections of the Zoning Ordinance. First is to correct some numbering issues that were inadvertently created with a previous adjustment to the code. The second change is to adjust standards for accessory dwellings and blank walls on commercial buildings. The changes to blank wall requirements are a result of monitoring issues with the current requirements over the past 12-18 months. The final change is to adjust standards for screening and open storage. The current language has created confusion and need to be clarified. The Planning and Zoning Commission considered these changes at its November 5, 2019, and January 7, 2020, meetings and recommended approval by unanimous vote. Staff concurs with this recommendation and respectfully requests approval of the changes.

Relevant PBB Results & Department Strategic Plan

☐ ☒ ☒ ☐ ☒ ☐ ☐ ☐

The ordinance amendments are consistent with goals for good governance, growth, and livability. They adjust the standards to be more clear and useable, thereby making development a smoother process. They also create standards that affect the aesthetics of the community, creating a more livable environment.

Interdepartmental Coordination

Staff from Planning and Legal have coordinated on these changes.

Fiscal Impact

NA

Legal Review

Legal has reviewed all of the proposed changes.

IDAHO FALLS PLANNING AND ZONING COMMISSION
STAFF REPORT

Comprehensive Zoning Ordinance Amendments

Section 11-3-4(D),Table 11-3-3 & Section 11-3-4(E)

January 7, 2020

IDAHO FALLS

Community Development Services

Applicant: City of Idaho Falls

Attachments:
1. Proposed Amendment Language

Staff Recommendation: To **recommend** to the Mayor and City Council approval of the Amendment of Title 11, Chapter 3 Zoning Regulations of the Comprehensive Zoning Ordinance, Section 11-3-4(D),Table 11-3-3 Dimensional Standards for Accessory Structures in Residential Zones and Section 11-3-4(E), Supplemental standards for the TN Zone.

Staff Comments: These proposed changes reflect slight adjustments to the required setbacks for accessory structures in the TN and R3 Zones. Staff would recommend adjusting the front setback to match the same setback as the primary structure. This is what is done in other similar residential zones within the code. Accessory structures like a garage or shed are generally set to the rear of the property so meeting front setbacks is not difficult. Having a difference in front setbacks between the primary and accessory structures can create issues for corner lots.

Staff is also recommending an adjustment to the language regarding the setback for a porch within the TN Zone. The amendment includes the removal of the word "front". In administering the code staff has had issues on corner lots where there is both a front and side porch. It's odd that one porch is allowed to extend into the setback and the other not when the use is the same. Clarifying that the exception to the setback applies for any porch facing a street will assist in the consistent application of the code. Additionally, staff is recommending adjusting the depth requirement of the porch from six feet to five feet. A six foot depth requires that the structure be placed at a 16 foot setback, exceeding the minimum 15 foot setback required by the code. The modification to five feet will also allow some existing properties to place more substantial porch features on existing residences.

Amendment Language:

…

(D) Dimensional Standards for Accessory Structures in Residential Zones.

Table 11-3-3: Dimensional Standards for Accessory Structures in Residential Zones

	RE	RP	R1	R2	TN	R3	R3A	RMH
Setbacks – Minimum in ft.								
Front	40	30	25	20	~~25~~15	~~20~~15	15	25
Side	20	0/7.5*	0/6*	0/6*	0/5*	0/6*	0/6*	0/10*
Rear	40*	0*	0*	0*	0*	0*	0*	0*
Building height- Maximum in ft.		12/24*	12/24*	12/24*	12/24*			12/24*
Lot coverage of the rear yard, maximum %	30	30	30	30	30			30
*See explanations, exceptions and qualifications that follow in Section 11-3-4D (1-5) of this Zoning Code.								

(1) In residential zones, accessory structures which are more than twelve feet (12') in height must meet the same setbacks as primary buildings.

(2) In all residential zones, except the RE Zone, side yard requirements for accessory buildings shall be the same as for main buildings, except that no side yard shall be required for accessory buildings which are located more than twelve feet (12') in the rear of the main building.

(3) The rear yard setback shall be three feet (3') on lots in any residential zone in which the rear yard is contiguous to an alley.

(4) In the RMH Zone, a minimum rear yard of fifteen feet (15') is permitted if one (1) of the required side-yards is a minimum of twenty five feet (25').

(5) Properties zoned RP and RP-A prior to the adoption of this Zoning Code shall meet the setbacks required at the time they were approved. A listing of applicable subdivisions can be found in the Section 11-7-2. The applicable setbacks required at the time they were approved are as follows:

Table 11-3-4: Prior RP and RP-A Accessory Building Setbacks

	RP	RP-A
Setbacks – Minimum in ft.		
Front	30	30
Side	20	5*
Rear	25	5*
*See explanations, exceptions and qualifications that follow in Section11-3-4D(1,3) of this Zoning Code.		

…

(E) Supplemental standards for the TN Zone.

(2) Entryways and Pathway Connections.

(a) All structures shall have one (1) primary entry that faces the street and a pathway that connects the entry with the sidewalk.

(b) Exceptions to the entryway requirements are allowed for dwelling units that face a common open space area which is open to the street.

(c) A ~~front~~ covered porch, with a minimum depth of ~~six~~ five feet (~~6~~ 5'), may encroach five feet (5') into the ~~front~~ yard setback facing a street.

IDAHO FALLS PLANNING AND ZONING COMMISSION
STAFF REPORT

Comprehensive Zoning Ordinance Amendments
Section 11-3-6(D) Blank Walls; & 11-4-4(I) Screening
November 11, 2019

IDAHO FALLS

Community Development Services

Applicant: City of Idaho Falls

Attachments:
1. Proposed Amendment Language

Staff Recommendation: To **recommend** to the Mayor and City Council approval of the amendment language to the Comprehensive Zoning Ordinance Section 11-3-6(D) Blank Walls; and 11-4-4(I) Screening Requirements.

Staff Comments: Blank wall and screening requirements were first implemented with the rewrite of the zoning ordinance in 2018. Having worked with the ordinance for two construction cycles staff is recommending some clarifying language to address feedback from developers as well as challenges the staff has come across in applying the ordinance.

Blank Walls: The purpose of regulating blank walls was to animate the public streetscape and improve the interest, comfort, and safety for pedestrians and those visiting the site. We have heard concerns from developers of whether the requirements should apply when the proposed building will be located a large distance back from the right-of-way. Additionally, staff has questioned if the requirements should apply to buildings that only have a narrow street frontage for access and are screened by developed pad sites in front of the building. Staff is proposing to have the blank wall requirements apply only when the building is within 130 feet of the right-of-way. This will allow the standard to fulfill the purpose for which it was originally designed without be over regulatory to buildings that are setback a large distance or visually obstructed from the right-of-way.

Staff recommends reordering the list of treatments according to the frequency of use for the ease of applying the ordinance. Also, included in the change is some specific landscaping requirements with regard to the size of vegetation planted. The code is also amended to clarify that required perimeter landscaping can be used to account for 25% of the 50% coverage requirement if the building is placed near the street. This will further incentivize the purpose of the requirement to improve the streetscape of the site. The vertical trellis requirement also gets clarified to cover 25% of the wall area. Previously there was no percentage requirement, but it was inferred that the same 50% as the landscaping would apply. This has created issues with multiple story buildings in the city. It is challenging to find a vine that would be able to reach the coverage requirements with our short growing season.

Screening: Staff would propose to clarify the screening requirements for service areas to only apply in commercial zones. It is generally expected that these areas would be visible in industrial or manufacturing type zones. Similar to the blank wall requirement there has been questions regarding when screening applies. To clarify staff would propose requiring screening of service areas or outdoor storage areas when they are within 30 feet of a public street of common space.

Blank Wall Amendment Language.

Section 11-3-6(D) Blank Walls. In all commercial zones no blank wall greater than 24' in length shall front a public street, unless treated in one (1) or more of the following ways, when that wall is within one hundred and thirty feet (130') of any public street or any public or common open space:

~~(1) A vertical trellis in front of the wall with climbing vines or plant materials; or~~

~~(2) A landscaped planting bed at least five feet (5') wide or raised planter bed at least two feet (2') high and three feet (3') wide in front of the wall, with plant materials that obscure or screen at least fifty percent (50%) of the wall's surface within three (3) years; or~~

~~(3) Artwork (mosaic, mural, sculpture, relief, etc.) over at least fifty percent (50%) of the blank wall surface, excluding any area devoted to signs; or~~

~~(4) Windows or window shaped openings over at least twenty percent (20%) of the blank wall surface.~~

(1) Windows, clear doors, or window shaped openings over at least twenty percent (20%) of the blank wall surface; or

(2) A landscaped planting bed immediately adjacent to the wall at least five feet (5') wide or raised planter bed at least two feet (2') high and three feet (3') wide in front of the wall, with plant materials shown that will grow into and obscure or screen at least fifty percent (50%) of the wall's surface planted at an initial size of five foot (5') tall evergreens, two inch (2") caliper tree, five (5) gallon shrubs, and one (1) gallon perennial and or ornamentals grasses (plant species and growth characteristics must be provided on the plans, taking into consideration the USDA plant hardiness zones). If no hard surface is between the public street and the structure other than a designated sidewalk and pedestrian access from sidewalk park strip, street trees can be utilized to account for twenty five percent (25%) of required blank wall coverage; or

(3) A vertical trellis in front of the wall covering twenty five percent (25%) of the wall surface with hanging of climbing vines or other climbing plant materials planted to grow into and fill-up required trellis; (plant species and growth characteristics must be provided on the plans, taking into consideration the USDA plant hardiness zones); or

(4) Artwork (mosaic, mural, sculpture, relief, etc.) over at least fifty percent (50%) of the blank wall surface, excluding any area devoted to signs; or

Screening Amendment Language.

(I) Screening Requirements.

(1) Service Areas, Loading Docks, and Service Equipment. Within commercial zones ~~A~~any service areas, loading docks, service equipment, or other site utility area that is within 30' of any public street or any public or common open space ~~visible from contiguous property or public right-of-way~~ shall be screened with a landscape buffer or by opaque fences or wall constructed to a minimum height of six feet (6'). ~~A list of approved plant material for landscape screening is listed in the Table 11-4-1 Minimum Landscaping and Buffer Requirements of this Code.~~ Where feasible, service areas, loading docks, and service equipment shall be sited to the rear or side of a building, or in a location where visibility from the public street is minimized.

(2) Open Storage. Open storage areas within 30' of any public street or any public or common open space shall be screened ~~from public streets~~ by buildings or a ten foot (10') wide planting strip with trees and ground cover plus a masonry wall or opaque fence at least six feet (6') in height or a dense hedge that will attain a height of at least six feet (6').

(3) Refuse and Recycling. Refuse and recycling containers shall be screened by solid fences or walls constructed to a minimum height of six feet (6'). Where feasible, enclosures for refuse and recycling containers shall be sited to the rear or side of a building, or in a location where visibility from public rights-of-way is minimized.

(4) The Zoning Administrator may require additional landscaping when necessary to screen exterior storage, loading areas or security lights from public streets or adjacent residential properties.

(5) When not otherwise specified, screening shall consist of a dense hedge and shall be maintained at a minimum height of four feet (4').

IDAHO FALLS PLANNING AND ZONING COMMISSION
STAFF REPORT

Comprehensive Zoning Ordinance Amendment
11-2-6 Standards for Allowed Land Uses (Sequencing Change)
January 7, 2020

IDAHO FALLS

Community Development Services

Applicant: City of Idaho Falls

Attachments:
1. Proposed Amendment Language

Staff Recommendation: To **recommend** to the Mayor and City Council approval of the Amendment of Title 11, Section 11-2-6 Standards for Allowed Land Uses.

Staff Comments: In October of 2019 the City Council approved an ordinance amending the Comprehensive Zoning Ordinance. At the time of approval staff was unaware that the Word document for the ordinance had autocorrected the format numbering for the changes to Section 11-2-6. With the adoption of the ordinance this created two Letter "A's" and two letter "B's" for this section. The intent of this ordinance change is to correct that previous error deleting the duplicate letter section and placing the language within the correct lettering for the section, (O) Dwelling, Multi-Unit and (W) Planned Unit Development (PUD).

Amendment Language:

11-2-6: STANDARDS FOR ALLOWED USES.

…

(A) Accessory Use, Fuel Station. Accessory Use, Fuel Stations shall not occupy more than twenty-five percent (25%) of the property.

~~(A) Dwelling, Multi-Unit.~~

~~(1) In the R2 Zone, no more than four (4) dwelling units shall be constructed within a single structure.~~

~~(2) In the LC Zone, multi-unit developments shall comply with the development standards of the R3A Zone.~~

(B) Accessory Use, Storage Yard. Accessory Use, Storage Yards shall meet the requirements for screening as set forth in Section 11-4-4.

~~(B) Planned Unit Development (PUD).~~

…

~~(11) Phasing. Phasing of development and associated public and private improvements is permitted, subject to an approved phasing schedule. Phased development shall be considered with the initial PUD approval process and ate phasing schedule shall be approved as part of the development plan. Proposed amenities shall be constructed with the first phase or approved according to the phasing schedule, provided that a majority of the improvements occur within the first phase. Upon approval of the development plan and schedule for all phases of the PUD, each phase of the development may occur in accordance with the review and approval procedures, as specified by this Code.~~

…

(O) Dwelling, Multi-Unit.

(1) In the R2 Zone, no more than four (4) dwelling units shall be constructed within a single structure.

(2) In the LC Zone, multi-unit developments shall comply with the development standards of the R3A Zone.

…

(W) Planned Unit Development (PUD).

…

(11) Phasing. Phasing of development and associated public and private improvements is permitted, subject to an approved phasing schedule. Phased development shall be considered with the initial PUD approval process and ate phasing schedule shall be approved as part of the development plan. Proposed amenities shall be constructed with the first phase or approved according to the phasing schedule, provided that a majority of the improvements occur within the first phase. Upon approval of the development plan and schedule for all phases of the PUD, each phase of the development may occur in accordance with the review and approval procedures, as specified by this Code.

November 12, 2019 7:00 p.m. Planning Department

Council Chambers

MEMBERS PRESENT: Commissioners Margaret Wimborne, Joanne Denney, Brent Dixon, Arnold Cantu, Gene Hicks, Natalie Black, George Morrison. (7 present 6 votes).

MEMBERS ABSENT: George Swaney, Lindsey Romankiw

ALSO PRESENT: Planning Director Brad Cramer; Assistant Planning Directors Kerry Beutler, Brent McLane and Brian Stephens; and interested citizens.

CALL TO ORDER: Margaret Wimborne called the meeting to order at 7:00 p.m.

CHANGES TO AGENDA: None.

MINUTES: Morrison and Dixon had changes to the minutes regarding wording of their comments. (Pages 7, 8, 16 and 17). **Cantu moved to approve the October 2, 2019 minutes with the suggested amendments, Black seconded the motion and it passed unanimously**

Public Hearing(s):

10. RZON 19-011: ZONING ORDINANCE AMENDMENT. Stephens presented the staff report, a part of the record. **Blank Wall:** There was some discussion to clarify that the blank wall is only required if the building is 130' or closer to the street, and the buildings that are farther set back from the street will have other landscaping requirements. Stephens indicated that the purpose of the Blank Wall is to make the buildings that are close to the wall look good. Black is concerned when they were discussing the Shopko building. Cramer stated that the idea is to create more inviting streetscape. Cramer stated that won't apply to something that sits farther back. Cramer stated that if Shopko was developed under today's standards 20% of the massive parking lot would be landscaped and there would be landscaping along the street. Black is concerned that if someone moves into the Shopko building, they won't have to do anything to the parking lot and the Blank Wall wouldn't affect them either. Black asked what problems they are seeing and why they are wanting to change the wording. Stephens started to go through his slides to explain starting with Shopko, then moving onto Cash and Carry. Stephens continued with his staff report. Dixon wants them to define a minimum square footage of wall and below that minimum you don't have to do anything because there are walls that are pretty small. Dixon thinks they will need to be more specific about the discussion on artwork. Dixon stated that the point where they talk about common or open space and the back side of the City Electric building is a huge blank wall that is really ugly and you could do something very cool with that wall, and at what point is it common open space. Stephens clarified that this will be for things moving forward from the adoption of the rule. Dixon asked when signage counts as something on a wall. Stephens suggested leaving it the way it is but is open to making changes to go to City Council the way the Commission wants. Dixon stated that another thing they can do if they are worried about taller walls, is rather than saying a mural, sculpture, etc., just having a difference in color and texture break up the monotony and that is the purpose. Wimborne reminded the Commission that the emphasis is on the streetscape, not the building scape. Black asked about the sample picture of the mosaic and sample landscaping and what the response from the developers has been. Stephens stated that they haven't shared this out with developers. Stephens moved on with the **Screening:** Black asked if this will affect Lucy's that has a garbage

bin with no screening. Stephens stated that there is a trash enclosure for Lucy's. Wimborne asked about the language around buffer requirements of the code has been scratched. Stephens stated that it is just telling you where to go to get the list and that is being struck. Stephens stated that they are reviewing the plant material and they are less concerned with the specific species as long as it is dense and covers. Wimborne is worried that there are not enough guidance and people can pick whatever they want. Stephens stated that they are primarily hoping to receive walls and fences. Beutler clarified that 11-4-1 is a buffering table and they were trying to separate out the buffering from the screening. Beutler explained you would buffer from an adjacent use, and screen something. Dixon asked what this new regulation would require if Fred Meyer was being built under this proposed ordinance, where the dock area faces Anderson. Stephens stated that they wouldn't need to do anything because they are further than 30'. Beutler stated that the code separately requires landscaping adjacent to the right of way with street trees, and then the loading dock section could either screen with a solid fence or with additional landscaping. Dixon asked when a solid fence becomes a blank wall. Dixon asked about the "temporary outdoor storage/sales areas". Beutler stated that most of them are more than 30' back and so they wouldn't fall under the screening requirement. Stephens stated that those areas are outside of what is being discussed.

Wimborne opened the public hearing.

No on appeared in support or opposition to the application.

Wimborne closed the public hearing.

Wimborne clarified that staff is comfortable with taking input and then not taking action on this item and have it come back in December. Cramer clarified that they would need to recess it until that date.

Black thanked the staff for adding more beautification to the City Ordinances.

Wimborne indicated that Dixon had issue with the artwork section (4) for blank walls and perhaps different building materials within the building could act as a relief/sculpture. Dixon stated that they would have to do percentages of the wall so its not just "trim". Dixon stated that they are trying to avoid a cinderblock wall.

Wimborne indicated that Dixon had issue with the introductory language and believes there needs to be minimums on the size of blank wall. Dixon agreed and indicated that if the wall is 10x10 it is probably small enough to be ignored, but there needs to be a minimum.

Wimborne indicated that Dixon had issue with when does signage become the art on the wall.

Dixon stated that he is unsure on the specifics of the landscaping. Dixon doesn't believe that a lot of the landscaping blocks the view of anything, and it needs to be thought through more to have an approved set of trees. Wimborne indicated that buffering is different than screening and can be brought up in a workshop. Dixon feels that it does have to do with the blank wall. Dixon stated that there was an approved list of trees and some would be appropriate for screening of a blank wall, where others wouldn't be appropriate, and that existing list could be used and divided into appropriate sections.

Hicks confirmed that this ordinance would apply to anything new. Hicks thinks it will look worse if part of the City looks good (new development) and part of it looks bad (old development). Dixon stated that eventually development turns over.

Black would like to have discussion only the streetscape or the building because she has a problem with the Shopko example.

Dixon moved to recess the Zoning Ordinance Amendment until the December 3rd meeting, Black seconded the motion and it passed unanimously.

December 3, 2019 7:00 p.m. Planning Department

Council Chambers

MEMBERS PRESENT: Commissioners Natalie Black, Joanne Denney, Brent Dixon, Gene Hicks, George Morrison. (5 present 4 votes).

MEMBERS ABSENT: George Swaney, Lindsey Romankiw, Arnold Cantu , Margaret Wimborne

ALSO PRESENT: Planning Director Brad Cramer; Assistant Planning Directors Kerry Beutler, Brent McLane and Brian Stephens; and interested citizens.

CALL TO ORDER: Natalie Black called the meeting to order at 7:00 p.m.

CHANGES TO AGENDA: None.

MINUTES: Hicks moved to approve the November 12, 2019 minutes, Morrison seconded the motion and it passed unanimously.

Business:

5. ANNX 19-013: ANNEXATION/INITIAL ZONING. Annexation and Initial Zoning of I&M. Stephens presented the staff report, a part of the record.

Applicant: Bryce Esplin, 3834 Professional Way, Idaho Falls, Idaho. Esplin stood for questions.

Morrison moved to recommend to the Mayor and City Council approval of the annexation and initial zoning of I&M for Lot 4, Block 1, Sunnyside Industrial and Professional Park, as presented, Hicks seconded the motion and it passed unanimously.

Public Hearing(s):

3. RZON 19-011: REZONE. Amend Zoning Ordinance Blank Walls and Screening. Stephens presented the staff report, a part of the record. Stephens went through and addressed each of the concerns the Commission had at the previous hearing. Stephens presented that after discussion they have decided that 24' of wall for commercial would be a good measurement and anything smaller would be excluded from blank wall requirements. Stephens indicated that they want the signs governed by the Sign Code and not allow signs to count towards the blank wall. Stephens indicated that they have rearranged in the Code the requirements that they were actually looking for beginning with windows, etc. Black likes the way they repositioned the items. Dixon asked about a building that is 3-4 stories high and suggested having an area, and not a horizontal length. Stephens stated that when they discussed it, they decided primarily they are concerned with street level. Morrison commended staff on their efforts. Stephens discussed relief and indicated that Relief is defined as a sculptural technique where the sculpted elements remains attached to the solid background of the same material to create a sculpture relief to give the impression that the sculpted material has been raised above the background plane. Black discussed Shopko's building and how the new buildings are interesting, but the Shopko building itself is mostly blank wall. Stephens stated that it is a redevelopment property and if it does

redevelop, they will try to get them to put in internal landscape. Stephens stated that there are things in the Ordinance now that would require them to do something different. Black asked if the use that went back into Shopko stayed the same would they not have to bring it up to Code. Beutler indicated that if the use stays the same and they don't modify the parking lot, then they wouldn't be required to meet the internal landscaping requirements. Dixon asked about different colors or textures being a way to break up a blank wall. Stephens stated that they discussed architectural features and they don't think its appropriate right now. Stephens stated that they want to get this working good and then at a later date they can address some of the architectural things (5th Section for Architecture, including paint, etc.) Stephens stated that a bump out would be relief however it is more architectural so it was left out so they can get the current 4 pieces working well. Black asked if the developers are pushing back. Stephens stated that a lot of the developers have pushed back on the window percentages and they are coming in around 15-18% not the 20% required so they are doing landscaping to make up the percentage. Stephens stated that there is always a lot of pushback on landscaping. Stephens continued on with the screening section of the staff report. Black asked if this is only for residential and doesn't cover the residential (multi-family) where they put the garbage dumpster in the front. Stephens stated that multi-family is treated as "some residential" but are required to have a commercial site plan. Stephens stated that the new ordinance does require an enclosure. Dixon indicated some concern about the fencing height around containers and suggested stating that the enclosure be 1' higher than the item being enclosed or 6' whichever is less. Beutler stated that they will all likely have the full-size dumpster. Stephens stated that they are accommodating to their sanitation department. Stephens stated that most of the easy to develop properties in Idaho Falls are priced high, so no one wants to build, or already developed, so the development that is happening is the hard challenging in-fill properties. Dixon discussed Stephens drawings and asked if there is a way to change the wording, so the fence is not next to the sidewalk. Stephens stated that could be future working group projects. McLane stated that the fence requirement cannot be more than 3 feet tall in the first 15'.

Black closed the public hearing.

Morrison moved to recommend to the Mayor and City Council approval of the Amendments to the Comprehensive Zoning Ordinance Section 11-3-6 (D) and 11-4-1(I) for Blank Walls and Screening, Hicks seconded the motion and it passed unanimously.

January 7, 2019 7:00 p.m. Planning Department

Council Chambers

MEMBERS PRESENT: Commissioners Margaret Wimborne, Joanne Denney, George Swaney, Lindsey Romankiw, George Morrison, Brent Dixon, Natalie Black. (8 present 7 votes).

MEMBERS ABSENT: Arnold Cantu

ALSO PRESENT: Planning Director Brad Cramer; Assistant Planning Directors Kerry Beutler; and interested citizens.

CALL TO ORDER: Margaret Wimborne called the meeting to order at 7:00 p.m.

CHANGES TO AGENDA: None.

MINUTES: **Hicks moved to approve the December 3, 2019 minutes, Morrison seconded the motion and it passed unanimously.**

Public Hearing(s):

2. RZON 19-014: REZONE. Zoning Ordinance Amendment. Beutler presented the staff report, a part of the record. Dixon asked what the difference is between the front setback and the side setback for the primary building in the TN Zone. Beutler clarified that on a corner lot the setbacks are the same for the front and the side. Dixon clarified that this change would mean the same distance from the street to the porch.

Wimborne opened the public hearing.

No one appeared in support or opposition.

Wimborne closed the public hearing.

Dixon moved to recommend to the Mayor and City Council approval of the Comprehensive Zoning Ordinance Amendments, Morrison seconded the motion and it passed unanimously.

3. RZON 19-015: REZONE. Zoning Ordinance Numbering. Beutler presented the staff report, a part of the record.

Wimborne opened the public hearing.

No one appeared in support or opposition.

Wimborne closed the public hearing.

Dixon moved to recommend to the Mayor and City Council approval of the Comprehensive Zoning Ordinance Amendment as presented, Denney seconded the motion and it passed unanimously.

ORDINANCE NO. _____

AN ORDINANCE OF THE CITY OF IDAHO FALLS, IDAHO, AMENDING TITLE 11, CHAPTER 2 TO CORRECT NUMBERING IN THAT CHAPTER; AMENDING CHAPTER 3 TO MODIFY ACCESSORY STRUCTURE SETBACKS AND COMMERICAL ZONE BLANK WALL AND SCREENING REQUIREMENTS; AMENDING CHAPTER 4 TO CLARIFY ENTRY WALL STANDARDS IN THE TRADITIONAL NEIGHBORHOOD ZONE; PROVIDING SEVERABILITY, CODIFICATION, PUBLICATION BY SUMMARY, AND ESTABLISHING EFFECTIVE DATE.

WHEREAS, the City adopted the Comprehensive Zoning Ordinance to promote the health, safety, peace, convenience, and general welfare of the inhabitants of the City by implementing the goals and policies of the City's Comprehensive Plan; and

WHEREAS, the City desires for the standards of the Code to be consistent and clear; and

WHEREAS, upon review of the Code, Planning Division staff has determined there are minor updates needed to improve the consistency and clarity of the code's standards; and

WHEREAS, changes include modifying front setback standards for accessory structures to be consistent with primary structures, clarifying language for entryway standards within the Traditional Neighborhood Zone, and blank wall and screening requirements for commercial zones; and

WHEREAS, the Council conducted a duly noticed public hearing and passed a motion to approve the recommended changes on February 13, 2020.

NOW, THEREFORE, BE IT ORDAINED BY THE MAYOR AND COUNCIL OF THE CITY OF IDAHO FALLS, IDAHO, THAT:

SECTION 1. Title 11, Chapter 2, Section 6, of the City Code of the City of Idaho Falls, Idaho, is hereby amended as follows:

11-2-6: STANDARDS FOR ALLOWED USES.

…

(A) Accessory Use, Fuel Station. Accessory Use, Fuel Stations shall not occupy more than twenty-five percent (25%) of the property.

~~(A) Dwelling, Multi-Unit.~~

~~(1) In the R2 Zone, no more than four (4) dwelling units shall be constructed within a single~~

~~structure.~~

~~(2) In the LC Zone, multi-unit developments shall comply with the development standards of the R3A Zone.~~

(B) Accessory Use, Storage Yard. Accessory Use, Storage Yards shall meet the requirements for screening as set forth in Section 11-4-4.

~~(B) Planned Unit Development (PUD).~~

…

~~(11) Phasing. Phasing of development and associated public and private improvements is permitted, subject to an approved phasing schedule. Phased development shall be considered with the initial PUD approval process and ate phasing schedule shall be approved as part of the development plan. Proposed amenities shall be constructed with the first phase or approved according to the phasing schedule, provided that a majority of the improvements occur within the first phase. Upon approval of the development plan and schedule for all phases of the PUD, each phase of the development may occur in accordance with the review and approval procedures, as specified by this Code.~~

…

(O) Dwelling, Multi-Unit.

(1) In the R2 Zone, no more than four (4) dwelling units shall be constructed within a single structure.

(2) In the LC Zone, multi-unit developments shall comply with the development standards of the R3A Zone.

…

(W) Planned Unit Development (PUD).

…

(11) Phasing. Phasing of development and associated public and private improvements is permitted, subject to an approved phasing schedule. Phased development shall be considered with the initial PUD approval process and ate phasing schedule shall be approved as part of the development plan. Proposed amenities shall be constructed with the first phase or approved according to the phasing schedule, provided that a majority of the improvements occur within the first phase. Upon approval of the development plan and schedule for all phases of the PUD, each phase of the development may occur in accordance with the review and approval procedures, as specified by this Code.

SECTION 2. Title 11, Chapter 3 of the City Code of the City of Idaho Falls, Idaho, is hereby amended as follows:

11-3-4: STANDARDS FOR RESIDENTIAL ZONES.

…

(D) Dimensional Standards for Accessory Structures in Residential Zones.

Table 11-3-3: Dimensional Standards for Accessory Structures in Residential Zones

	RE	RP	R1	R2	TN	R3	R3A	RMH
Setbacks – Minimum in ft.								
Front	40	30	25	20	~~25~~15	~~20~~15	15	25
Side	20	0/7.5*	0/6*	0/6*	0/5*	0/6*	0/6*	0/10*
Rear	40*	0*	0*	0*	0*	0*	0*	0*
Building height-Maximum in ft.		12/24*	12/24*	12/24*	12/24*			12/24*
Lot coverage of the rear yard, maximum %	30	30	30	30	30			30
*See explanations, exceptions and qualifications that follow in Section 11-3-4D (1-5) of this Zoning Code.								

(1) In residential zones, accessory structures which are more than twelve feet (12') in height must meet the same setbacks as primary buildings.

(2) In all residential zones, except the RE Zone, side yard requirements for accessory buildings shall be the same as for main buildings, except that no side yard shall be required for accessory buildings which are located more than twelve feet (12') in the rear of the main building.

(3) The rear yard setback shall be three feet (3') on lots in any residential zone in which the rear yard is contiguous to an alley.

(4) In the RMH Zone, a minimum rear yard of fifteen feet (15') is permitted if one (1) of the required side-yards is a minimum of ~~twenty~~ twenty-five feet (25').

(5) Properties zoned RP and RP-A prior to the adoption of this Zoning Code shall meet the setbacks required at the time they were approved. A listing of applicable subdivisions can be found in the Section 11-7-2. The applicable setbacks required at the time they were approved are as follows:

Table 11-3-4: Prior RP and RP-A Accessory Building Setbacks

	RP	RP-A
Setbacks – Minimum in ft.		

Front	30	30
Side	20	5*
Rear	25	5*
*See explanations, exceptions and qualifications that follow in Section11- 3-4D(1,3) of this Zoning Code.		

…

(E) Supplemental standards for the TN Zone.

…

(2) Entryways and Pathway Connections.

(a) All structures shall have one (1) primary entry that faces the street and a pathway that connects the entry with the sidewalk.

(b) Exceptions to the entryway requirements are allowed for dwelling units that face a common open space area which is open to the street.

(c) A ~~front~~ covered porch, with a minimum depth of ~~six~~ five feet (~~6~~ 5'), may encroach five feet (5') into the ~~front~~ yard setback facing a street.

…

Section 11-3-6 STANDARDS FOR COMMERCIAL ZONES.

…

(C) Blank Walls. In all commercial zones no blank wall greater than 24' in length shall front a public street, unless treated in one (1) or more of the following ways, when that wall is within one hundred and thirty feet (130') of any public street or any public or common open space:

~~(1) A vertical trellis in front of the wall with climbing vines or plant materials; or~~
~~(2) A landscaped planting bed at least five feet (5') wide or raised planter bed at least two feet (2') high and three feet (3') wide in front of the wall, with plant materials that obscure or screen at least fifty percent (50%) of the wall's surface within three (3) years; or~~
~~(3) Artwork (mosaic, mural, sculpture, relief, etc.) over at least fifty percent (50%) of the blank wall surface, excluding any area devoted to signs; or~~
~~(4) Windows or window shaped openings over at least twenty percent (20%) of the blank wall surface.~~
(1) Windows, clear doors, or window shaped openings over at least twenty percent (20%) of the blank wall surface; or

(2) A landscaped planting bed immediately adjacent to the wall at least five feet (5') wide or raised planter bed at least two feet (2') high and three feet (3') wide in front of the wall,

with plant materials shown that will grow into and obscure or screen at least fifty percent (50%) of the wall's surface planted at an initial size of five foot (5') tall evergreens, two inch (2") caliper tree, five (5) gallon shrubs, and one (1) gallon perennial and or ornamentals grasses (plant species and growth characteristics must be provided on the plans, taking into consideration the USDA plant hardiness zones). If no hard surface is between the public street and the structure other than a designated sidewalk and pedestrian access from sidewalk park strip, street trees can be utilized to account for twenty-five percent (25%) of required blank wall coverage; or

(3) A vertical trellis in front of the wall covering twenty-five percent (25%) of the wall surface with hanging of climbing vines or other climbing plant materials planted to grow into and fill-up required trellis; (plant species and growth characteristics must be provided on the plans, taking into consideration the USDA plant hardiness zones); or

(4) Artwork (mosaic, mural, sculpture, relief, etc.) over at least fifty percent (50%) of the blank wall surface, excluding any area devoted to signs; or

…

SECTION 1. Title 11, Chapter 4, of the City Code of the City of Idaho Falls, Idaho, is hereby amended as follows:

11-4-4: LANDSCAPING, BUFFERS, AND SCREENING.

…

(I) Screening Requirements.

(1) Service Areas, Loading Docks, and Service Equipment. Within commercial zones ~~A~~any service areas, loading docks, service equipment, or other site utility area that is within 30' of any public street or any public or common open space ~~visible from contiguous property or public right-of-way~~ shall be screened with a landscape buffer or by opaque fences or wall constructed to a minimum height of six feet (6'). ~~A list of approved plant material for landscape screening is listed in the Table 11-4-1 Minimum Landscaping and Buffer Requirements of this Code.~~ Where feasible, service areas, loading docks, and service equipment shall be sited to the rear or side of a building, or in a location where visibility from the public street is minimized.

(2) Open Storage. Open storage areas within 30' of any public street or any public or common open space shall be screened ~~from public streets~~ by buildings or a ten foot (10') wide planting strip with trees and ground cover plus a masonry wall or opaque fence at least six feet (6') in height or a dense hedge that will attain a height of at least six feet (6').

(3) Refuse and Recycling. Refuse and recycling containers shall be screened by solid fences or walls constructed to a minimum height of six feet (6'). Where feasible, enclosures for refuse and recycling containers shall be sited to the rear or side of a building, or in a location where visibility from public rights-of-way is minimized.

(4) The Zoning Administrator may require additional landscaping when necessary to screen exterior storage, loading areas or security lights from public streets or adjacent residential properties.

(5) When not otherwise specified, screening shall consist of a dense hedge and shall be maintained at a minimum height of four feet (4').

SECTION 2. Savings and Severability Clause. The provisions and parts of this Ordinance are intended to be severable. If any section, sentence, clause, or phrase of this Ordinance should be held to be invalid or unconstitutional by a court of competent jurisdiction, such invalidity or unconstitutionality shall not affect the validity or constitutionality of any other section, sentence, clause, or phrase of this Ordinance.

SECTION 3. Codification Clause. The City Clerk is instructed to immediately forward this Ordinance to the codifier of the official municipal code for proper revision of the Code.

SECTION 4. Publication. This Ordinance, or a summary thereof in compliance with Idaho Code, shall be published once in the official newspaper of the City, and shall take effect immediately upon its passage, approval, and publication.

SECTION 5. Effective Date. This Ordinance shall be in full force and effect from and after its passage, approval, and publication.

PASSED by the City Council and APPROVED by the Mayor of the City of Idaho Falls, Idaho, this _____ day of February, 2020.

CITY OF IDAHO FALLS, IDAHO

_____
REBECCA L. NOAH CASPER, MAYOR

ATTEST:

_____
KATHY HAMPTON, CITY CLERK

(SEAL)

STATE OF IDAHO)
) ss:
County of Bonneville)

I, KATHY HAMPTON, CITY CLERK OF THE CITY OF IDAHO FALLS, IDAHO, DO HEREBY CERTIFY:

That the above and foregoing is a full, true and correct copy of the Ordinance entitled, "AN ORDINANCE OF THE CITY OF IDAHO FALLS, IDAHO, AMENDING TITLE 11, CHAPTER 2 TO CORRECT NUMBERING IN THAT CHAPTER; AMENDING CHAPTER 3 TO MODIFY ACCESSORY STRUCTURE SETBACKS AND COMMERICAL ZONE BLANK WALL AND SCREENING REQUIREMENTS; AMENDING CHAPTER 4 TO CLARIFY ENTRY WALL STANDARDS IN THE TRADITIONAL NEIGHBORHOOD ZONE; PROVIDING SEVERABILITY, CODIFICATION, PUBLICATION BY SUMMARY, AND ESTABLISHING EFFECTIVE DATE."

(SEAL) _____
KATHY HAMPTON, CITY CLERK